Mechanics of Materials

With

Solved Problems

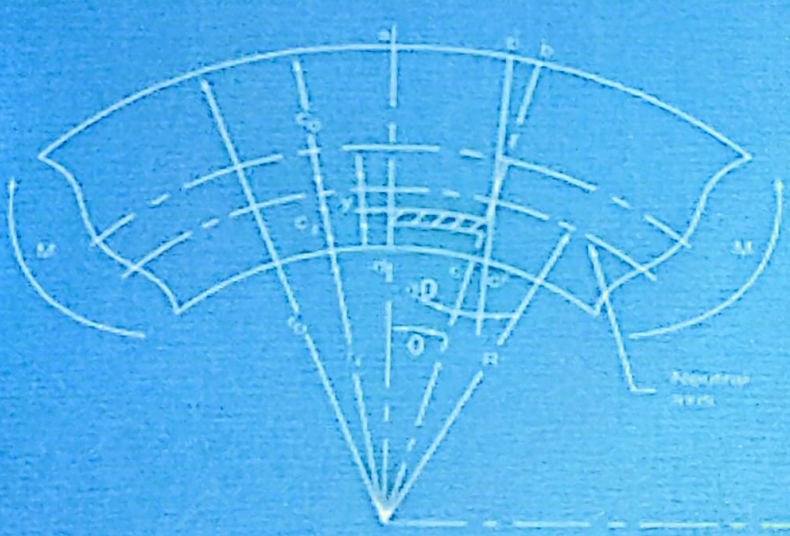

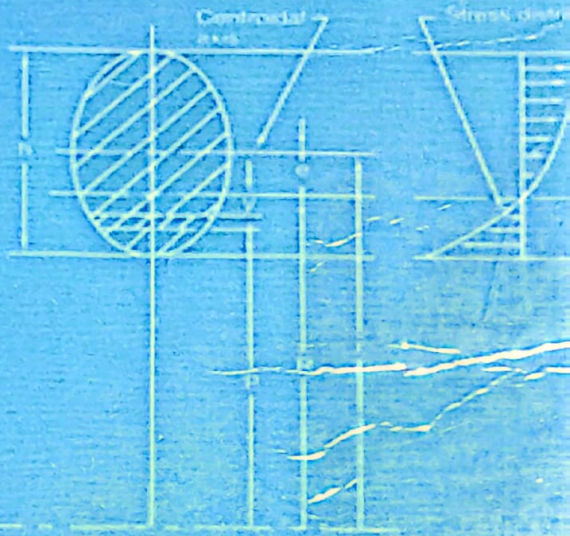

Amalesh Chandra Mandal

Md. Quamrul Islam

Islamic University of Technology (IUT
Organsation of Islamic Cooperation (OIC))

MECHANICS OF MATERIALS

with

SOLVED PROBLEMS

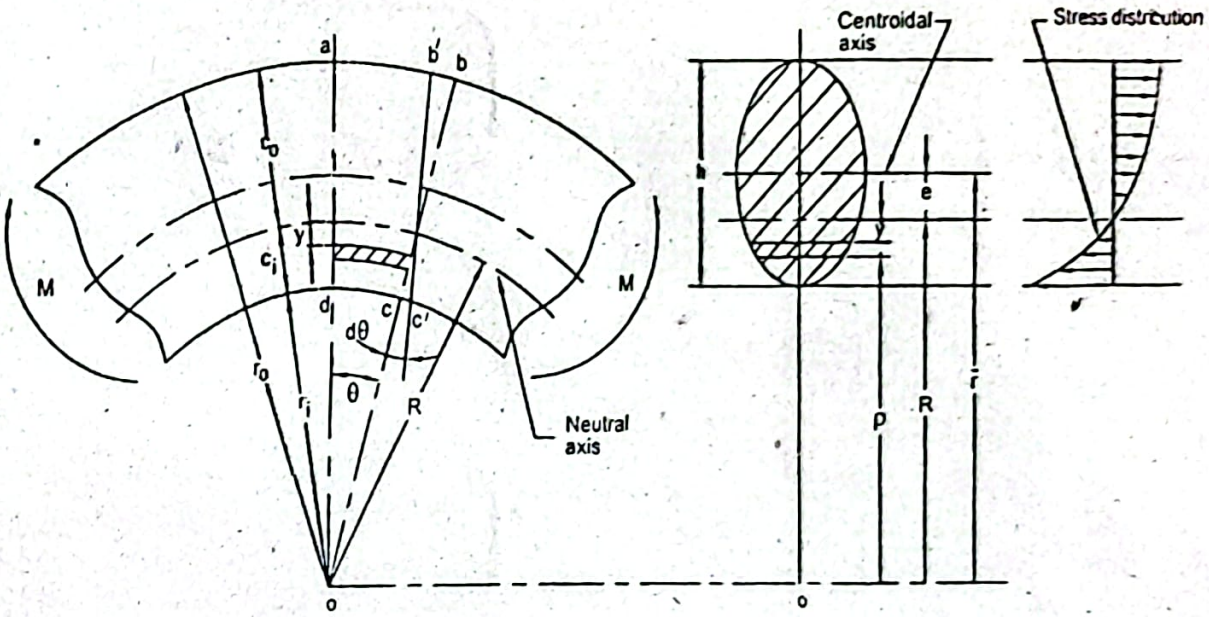

Amalesh Chandra Mandal Md. Quamrul Islam

Islamic University of Technology (IUT)
Organisation of Islamic Cooperation (OIC)

MECHANICS OF MATERIALS

with

SOLVED PROBLEMS

Published by
Islamic University of Technology (IUT)
Organisation of Islamic Cooperation (OIC)
Board Bazar, Gazipur-1704
Bangladesh
www.iutoic.dhaka.edu

First Edition : July, 2011

ISBN 978-984-33-2260-1

Price : Tk. Only

Printed by: DPP, 01713036386

MECHANICS OF MATERIALS

with

SOLVED PROBLEMS

Amalesh Chandra Mandal
Professor
and
Md. Quamrul Islam
Professor

Department of Mechanical Engineering,
Bangladesh University of Engineering and Technology,
Dhaka – 1000, Bangladesh

Preface

From interaction with the undergraduate students for many years the authors gather experience that the students usually prefer a text book with a good number of solved problems. With this idea in mind the authors have written this text book on "***Mechanics of Materials with Solved Problems***". This book contains relevant and necessary theories at the beginning of each chapter in the form of "***Questions and Answers***". The questions have been set incorporating every necessary part of theory; in doing that in some of the answers there has been minor exaggeration than is necessary for appropriate answer. The authors believe that this will help the students in two ways: on one side the students will find the idea about the relevant theories and on the other side they will be able to know the appropriate answers to the questions.

The book consists of about 600 solved problems from different corners so that the students can face any theoretical and practical problems in their academic and professional life. More than one hundred exercise problems have also been incorporated in this book.

The authors have given hard and sincere effort to make this book useful to the students. In spite of that they feel there may be some shortcomings and mistakes in the book. Any suggestion for its future improvement from any reader will be accepted whole heartedly and incorporated in the future revised edition.

June 2011 The authors

CONTENTS

Preface	vi
1. Simple Stress and Strain	1
2. Torsion	131
3. Shear and Moment in Beams	222
4. Stresses in Beams	335
5. Beam Deflection	426
6. Reinforced Beams	534
7. Column	588
8. Plane Stress and Strain	663
9. Strain Energy and Failure Theories	745
10. Combined Stress, Curved Beam and Thick-Walled Cylinder	848
11. Centroid and Moment of Inertia	917
Bibliography	973
Appendices	
Appendix A1: Location of Centroidal and Neutral Axes of Common Sections	974
Appendix A2: Areas and Centroid of Common Shapes of Moment Diagrams	976
Appendix A3: Moment of Inertia of Some Geometric Configurations	977
Appendix A4: SI Units and SI Unit Prefixes	979
Appendix A5: SI Units of Physical Quantities	980
Appendix A6: Average Mechanical Properties of Some Common Metals	981
Appendix A7: Properties of *W* Shapes (Wide-Flange Sections)	983
Appendix A8: Properties of *S* Shapes (*I* -beam Sections)	990
Appendix A9: Properties of Channel Sections	991
Appendix A10: Properties of Equal Angle Sections	992
Appendix A11: Properties of Unequal Angle Sections	994
Subject Index	996

Chapter I

Simple Stress and Strain

Question 1.1: What do you mean by mechanics of materials?

Answer:

Engineering mechanics is classified into three groups: mechanics of rigid bodies, mechanics of deformable bodies, and mechanics of fluids. *Mechanics of materials* or *strength of materials* is the part of mechanics of *deformable bodies* (bodies undergo deformation due to the application of load).

Statics and dynamics are devoted primarily to the study of external effects of forces on the *rigid bodies* (bodies do not undergo deformation due to the application of load). In reality every body will deform under the action of loads. In many cases the deformation is too small to affect the desired analysis. Then the body may be considered as rigid, as a result the analysis becomes simplified.

Mechanics of materials deals with the relations between the externally applied loads and their internal effects on the bodies. Moreover, the bodies are no longer assumed to be rigid; the deformation, however, small are of major interest.

Question 1.2: Distinguish between (a) elasticity and plasticity

Answer:

Elasticity: *Elasticity* is the property which enables a body deformed by stress to regain its original dimensions when the stress is removed. From the mechanical point of view the criterion of elasticity is not the amount of deformation, but the completeness with which the original dimensions are regained when the stress is removed. From this standpoint steel and glass are highly elastic compared to rubber. Rubber cannot regain its original dimension after removal of stress as the steel and glass can do, though the amount of deformation of the rubber is much higher.

In a solid body each molecule is acted upon by the forces due to the neighboring molecules. These forces are called the intermolecular forces. Each molecule remains in the equilibrium position in the body when no external force acts on the body. However, when the external force is applied on the body, the body is deformed and the molecules are displaced from their equilibrium position. Then the intermolecular forces are changed and the restoring forces are developed on the molecules. When the external force is removed these restoring forces bring the molecules of the body to the equilibrium position again, as a result the body regains its original form.

In the analysis, it will be assumed that the body is isotropic, that is, elastic properties are same in all directions. From the microscopic observation it is seen that, structural steel consists of crystals of various kinds and various orientations. As such this material is away from being homogenous. In spite of that assuming the steel structures as homogeneous and isotropic the theory of elasticity can be applied for them with high accuracy.

Plasticity: The opposite property to elasticity is called the *plasticity*. A perfectly *plastic body* is one which does not make any recovery of its original dimension after removal of stress. No body is perfectly plastic; similarly, no body is perfectly elastic at all ranges of stress. Any mechanical element has to be designed in such a way so that under the application of load it does not get permanently deformed, that is, it will retain its elastic property.

Question 1.3: Give an elaborate idea about stress and strain.

Answer:

Stress: Stress is defined as the force per unit area. It is often called *intensity of stress* or *unit stress*. A member under stress is shown in Figure 1.1. Stress σ is expressed as,

$$\sigma = \frac{P}{A} \tag{1.1}$$

where,

P = Force (total stress), (N)

A = Cross-sectional area, (m^2)

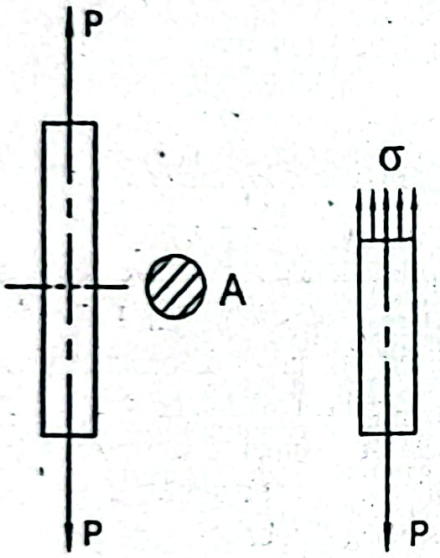

Figure 1.1: A Member under Stress.

Equation (1.1) has been established based on uniform distribution of stress, σ over the cross-section of the member. The SI unit of stress is N/m^2 (Pa). It is usual practice to call one-dimensional stress as the simple stress.

Types of Stresses: There are three fundamental stresses: tension, compression and shear. When the load elongates the member, it is called *tension*. The member shown in Figure 1.2a is under the action of tension and the stress is called the *tensile stress*.

When the load shortens the member, it is called *compression*. The member shown in Figure 1.2b is under the action of compression and the stress is called the *compressive stress*.

Figure 1.2c shows a member under the action of shear. *Shearing stress* acts along a plane and resists the tendency of the part of the body on one side of the plane to slide relative to the part of the body on the other side of the same plane.

Shearing stress is defined as,

$$\tau = \frac{P}{A} \tag{1.2}$$

where,
P = Shear force, (N)
A = Cross-sectional area, (m^2)

Shear force P has been assumed to be distributed uniformly over the cross-section *A*. Uniformly distributed shearing stress is less common than uniformly distributed tension or compression.

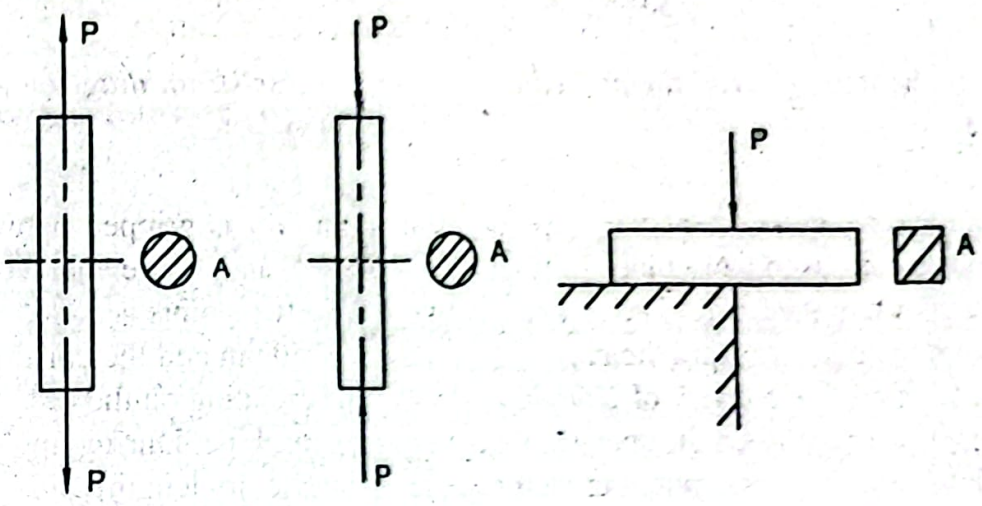

Figure 1.2: Members under Tensile, Compressive and Shearing Stresses.

Strain: *Strain* is the total deformation in a given length divided by the original length i.e. deformation per unit length. Strain is often called as the *unit deformation*. One-dimension strain is usually known as the *simple strain*. *Strain* is expressed as,

$$\varepsilon = \frac{\delta}{L} \tag{1.3}$$

where,
δ = Total deformation, (m)
L = Original length, (m)

The SI unit of strain is *m/m*

Due to the shearing stress, shearing deformation occurs as shown in Figure 1.3. *Unit shearing deformation* is defined as,

$$\tan\gamma = \frac{\delta_s}{L} \tag{1.4}$$

where,
δ_s = Shearing deformation, (m)
L = Length, (m)

When γ is small, one can write $\gamma = \frac{\delta_s}{L}$.

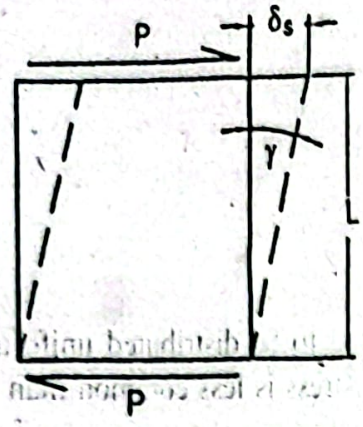

Figure 1.3: A Body under Shearing Deformation.

Question 1.4: Discuss in brief the procedure of plotting stress-strain diagram from the tension test.

Answer:

To conduct the tension test a specimen as shown in Figure 1.4 is gripped between two jaws in a universal testing machine. Initially two points A and B are marked on the specimen as shown in the figure. The distance between these two points is called the *gage length*. According to the standard the gage length may be of 50mm and the corresponding diameter of 12.5mm. Gage length of 200mm is often used depending on the test. Now the load *P* is applied gradually on the specimen by the testing machine. During applying the load, the load and the corresponding deformation (increase in length) are recorded successively until the specimen fails. Then the stress and strain are calculated from these data and the stress-strain diagram is plotted with the stress along the ordinate and strain along the abscissa as shown in Figure 1.5. The Figure 1.5a shows the typical stress-strain diagram for a *ductile material* (e.g. mild steel). It is a material which undergoes a considerable deformation before failure. The Figure 1.5b shows the typical stress-strain diagram for a *brittle material* (e.g. cast iron). It is a material which ruptures without noticeable change of deformation.

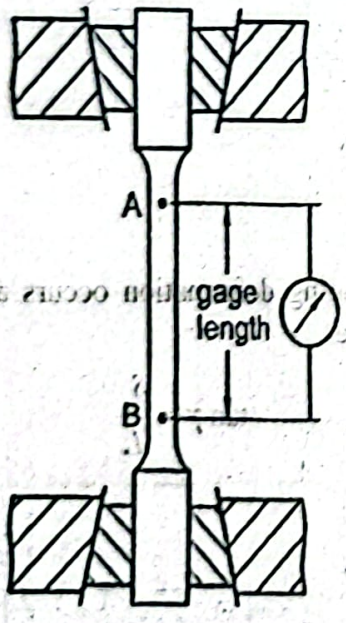

Figure 1.4: A Test Specimen Gripped between two Jaws.

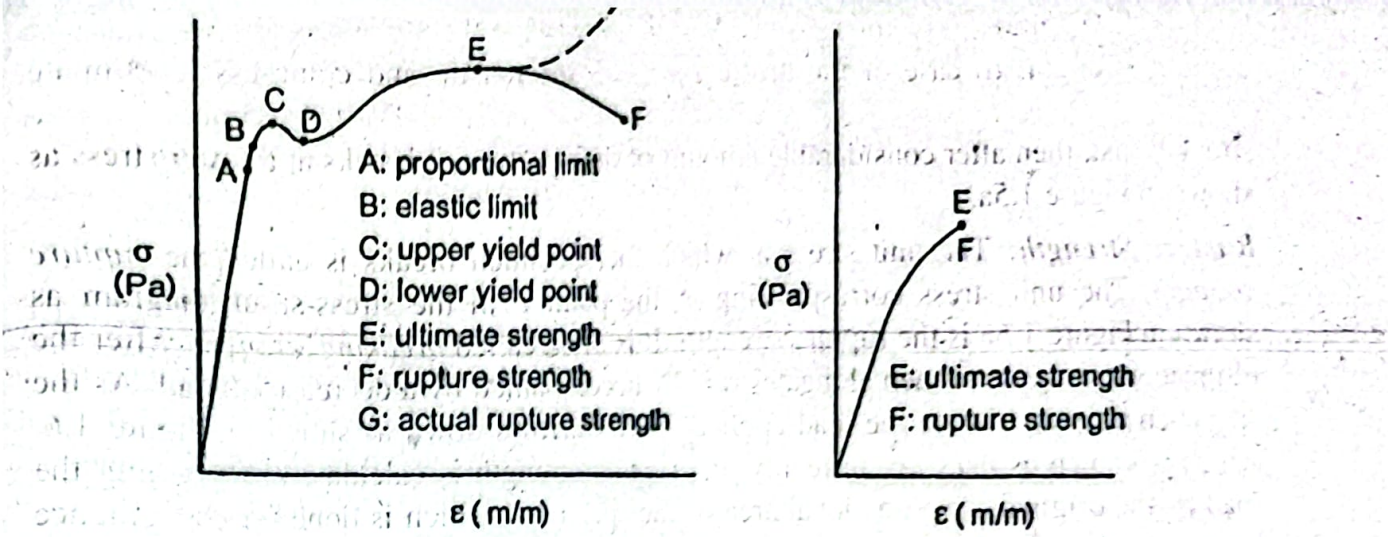

(a) For Ductile Material (b) For Brittle Material

Figure 1.5: Stress-Strain Diagram.

Question 1.5: Define the various properties of materials in reference to stress-strain diagram.

Answer:

Proportional Limit: In the stress-strain diagram, the limit up to which stress is proportional to strain is called the *proportional limit*. Figure 1.5a shows a typical stress-strain diagram for a ductile material, where, the stress corresponding to the point A in the stress-strain diagram is the proportional limit.

Hooke's Law: Property of proportionality of stress and strain is called *Hooke's law*.

Elastic Limit: The limiting unit stress beyond which a material cannot be stressed without causing a permanent deformation is called the *elastic limit*. In Figure 1.5a in the stress-strain diagram the point B indicates the elastic limit. For most materials the proportional limit appears to be the same as the elastic limit. In the stress-strain diagram the zone up to the elastic limit is called the *elastic zone*. The rest zone in the stress-stress diagram is known as the *plastic zone*. A specimen stressed to the point below the elastic limit will regain its original dimensions when the load will be released. However, when the stress exceeds the elastic limit, the specimen deforms plastically and will no longer attain its original dimension when unloaded. It is then said to have incurred the *permanent set*.

Yield Point: In the stress-strain diagram *yield point* is the point at which there is an appreciable elongation or yielding of the material without any corresponding increase of load. The Figure 1.5a shows two yield points. One is the upper yield point and the other one is the lower yield point. The unit stress corresponding to the point C in the stress-strain diagram is the upper yield point while unit stress corresponding to the point D is called the lower yield point. The stress corresponding to the yield point is called the *yield strength*. Lower yield point is used to determine the yield strength of a material. There is no well defined yield point for the brittle material as shown in the stress-strain diagram (Figure 1.5b).

Ultimate Strength: *Ultimate strength* is the highest unit stress that a material ca withstand. The unit stress corresponding to the point E in the stress-strain diagram is th ultimate strength. In case of the brittle materials the tensile and compressive ultimat strengths occur just before fracture. Ductile material under tensile load attains ultimat strength first, then after considerable amount of deformation, it breaks at a lower stress a shown in Figure 1.5a.

Rupture Strength: The unit stress at which the specimen breaks is called the *rupture strength*. The unit stress corresponding to the point F in the stress-strain diagram as shown in Figure 1.5a is the rupture strength. It is often called *breaking strength*. After the ultimate stress the specimen elongates rapidly accompanied by a decrease of load. As the specimen deforms due to the load application, it narrows down as shown in Figure 1.6, which is known as *necking*. In reality, the rupture strength is calculated by dividing the load by the original cross-sectional area of the specimen, which is done for convenience but it is not correct. As a result the rupture strength is lower than the ultimate strength for the structural steel, often called mild steel. For the brittle material as the Figure 1.5b shows the ultimate strength and the rupture strength are the same.

Figure 1.6: Necking or Narrowing (Cup and Cone Shape).

Actual Rupture Strength: If the load is divided by the true section area as the specimen narrows down after the ultimate stress, the stress will follow the dotted line as shown in Figure 1.5a. If the rupture area is measured after the failure and the load at rupture is divided by this area, the stress thus obtained is called the *actual rupture strength*. This value is much higher than the ultimate strength; in spite of that ultimate strength is considered as the maximum stress of a material.

Question 1.6: Discuss in brief about the failure character of ductile and brittle materials.

Answer:

A *ductile material* elongates linearly with the load making a steep slope at the beginning as shown in Figure 1.5a. After reaching the yield point it gives a considerable amount of deformation with relatively small increase in the applied load and even the load decreases after the ultimate stress. This deformation is created by slippage of material at an oblique plane and is due to shearing stress mainly. After attaining the maximum load, diameter of the specimen decreases with lowering of load and it forms *necking*. Ductile material ruptures along a cone shaped surface which makes an approximate angle of 45^0 with the original surface of the specimen.

A *brittle material* ruptures with a very small change of deformation as shown in Figure 1.5b. It has no yield point like that of a ductile material. In case of the brittle material rupture occurs along a plane perpendicular to the direction of load. There is no necking like that of a ductile material. Normal stress is primarily responsible for the failure of a brittle material.

Answer:

The phenomenon of yielding is peculiar to structural steel. Other grades of steel and steel alloys or other materials do not possess any sharp yield point. It is indicated by a typical stress-strain curve as shown in Figure 1.7.

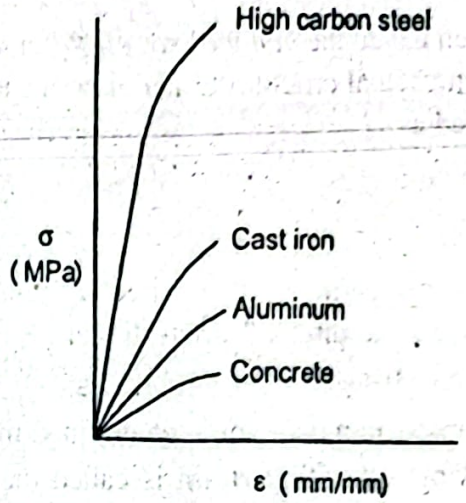

Figure 1.7: Comparative Stress-Strain Diagram for Different Materials.

Since there is no well-defined yield point for any of the materials mentioned in this figure, the yield point for such materials is determined by the *offset method*. In Figure 1.8 yield point is shown in the stress-strain diagram which has been obtained by the offset method. This is done by drawing a line parallel to the initial tangent of the stress-strain diagram. The parallel line is drawn at an arbitrary offset strain, usually 0.2% (0.002*m/m*). As shown in the figure yield point corresponds to the intersecting point of the parallel line drawn with the stress-strain curve.

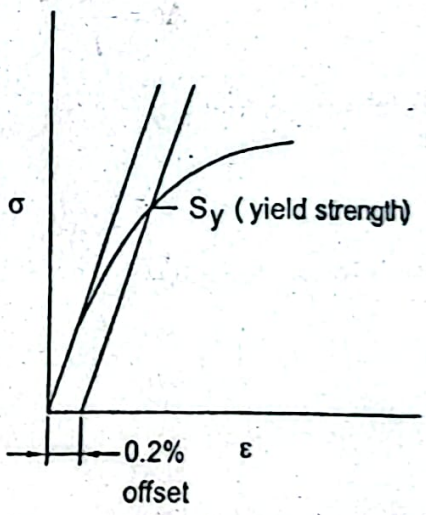

Figure 1.8: Yield Point by Offset Method.

Question 1.8: ***Discuss about nominal stress, nominal strain, true stress and true strain? Deduce expressions for each of them.***

Answer:

When an axial load is applied gradually to a specimen, its cross-sectional area begins to decrease. However, in a stress-strain diagram the stress used is obtained dividing the

applied load P by the original cross-sectional area A_o which is measured by application of the load on the specimen. This stress is known as the *engineering stress* and it is expressed as,

$$\sigma = \frac{P}{A_o} \qquad (1.$$

Engineering stress is often called the *nominal stress*. When the stress is obtained dividing the applied load P by the actual cross-sectional area of the specimen A; it is called *true stress* which is related as,

$$\sigma_t = \frac{P}{A} \qquad (1.$$

Hence, it is seen that the engineering stress is directly proportional to the load P; on the other hand the true stress is directly proportional to the load P and inversely proportional to the area A. True stress is shown in Figure 1.5a by the dotted line.

The strain used in the stress-strain diagram is determined by dividing the deformation with the original gage length L_o. This strain is called the *engineering strain* and is expressed as,

$$\varepsilon = \frac{\delta}{L_o} \qquad (1.$$

The engineering strain is often called the *nominal strain*. However, if the change in length $\Delta L = (L_o - L)$ and the corresponding length L are measured successively during application of the load and the strain is obtained by dividing the change in length ΔL with the length L; it gives an elemental strain as,

$$\Delta\varepsilon = \frac{\Delta L}{L}$$

Now making a sum of the successive elemental strains, we find a strain called the *true strain* and it is obtained as,

$$\varepsilon_t = \Sigma\Delta\varepsilon = \Sigma(\Delta L / L)$$

Using integral this equation can be expressed as,

$$\varepsilon_t = \int_{L_o}^{L} \frac{dL}{L} = \ln\frac{L}{L_o} \qquad (1.8$$

This strain is often called the *nominal strain*.

Question 1.9: Define the following properties of a material.
(a) Modulus of Elasticity (b) Modulus of Rigidity (c) Deformation (d) Stiffness (e) Ductility (f) Malleability (g) Brittleness (h) Toughness and (i) Modulus of Elastic Resilience (j) Poisson's Ratio.

Answer:

Modulus of Elasticity: Within the proportional limit the ratio of stress to strain is called the *modulus of elasticity* or *Young's modulus*. It is the slope of the straight part of the

curve ... the origin to the proportional limit. Modulus of elasticity E is expressed as.

$$E = \frac{\sigma}{\varepsilon} \tag{1.9}$$

SI unit of modulus of elasticity is N/m^2 or GPa. It may be mentioned here that for the various grades of steel the modulus of elasticity is same. The same modulus of elasticity implies that stiffness or ability to resist a deformation within the linear range is identical for all grades of steel. However, the strength varies depending on the grades of steel.

Modulus of Rigidity: *Modulus of rigidity* G is defined as the ratio of shear stress to shear strain within the proportional limit. It is often called the *shear modulus* which is expressed as,

$$G = \frac{\tau}{\gamma} \tag{1.10}$$

SI unit of modulus of rigidity is N/m^2 or GPa.

Deformation: From Equation (1.3), *deformation* of a member can be written as,

$$\delta = \varepsilon L$$

Substituting the value of strain ε from Equation (1.9),

$$\delta = \frac{\sigma L}{E}$$

Now substituting the value of stress from Equation (1.1), the expression of deformation becomes,

$$\delta = \frac{PL}{AE} \tag{1.11}$$

Stiffness: *Stiffness* is the property that enables a material to withstand high unit stress without great deformation. Stiffness of a material is measured by the value of modulus of elasticity E. Steel has higher E value than that of Aluminum; therefore, steel is stiffer than aluminum.

Ductility: *Ductility* is the property that enables material to undergo plastic deformation due to tensile stress. *Ductile materials* are commonly defined as those which can be readily drawn into wires. Common ductile materials are: gold, silver, platinum, steel, nickel, copper, aluminum, zinc, tin etc. Among them gold is the highest ductile material.

Malleability: *Malleability* is the property which enables the material to undergo plastic deformation due to compressive stress. *Malleable materials* are commonly defined as those which can be readily beaten into thin sheets. Most materials which are very ductile are also quite malleable. Common malleable materials are: gold, silver, lead, copper, aluminum, tin, platinum, zinc, steel etc. Among these materials gold has the highest malleability.

Brittleness: *Brittleness* is the tendency of a material to fracture or fail without considerable deformation. Common *brittle materials* are: cast iron, glass, concrete, ceramics, pottery etc.

Toughness: *Toughness* is the property of a material that enables it to endure shock or blows. When a blow is struck on a body, some of the energy of the blow is transmitted to the body and absorbed by it.

Modulus of Elastic Resilience: *Modulus of elastic resilience* is the property that measures the amount of energy absorbed by a unit volume of material when stressed to the elastic limit.

Poisson's Ratio: *Poisson's Ratio* is defined as the ratio of lateral strain and axial strain. Poisson's ratio is denoted by ν,

$$\nu = \left| \frac{lateral\ strain}{axial\ strain} \right| = -\frac{lateral\ strain}{axial\ strain} \qquad (1.12)$$

where, strains occur due to uniaxial stress only. When a member is subjected to an axial load, it is deformed along the direction of load. Simultaneously, there occurs lateral deformation and *lateral strain* is obtained as the deformation per unit length of the transverse dimension. When a sample is elongated by tensile stress, contraction takes place in the lateral direction.

Question 1.10: What do you mean by allowable stress and factor of safety?

Answer:

Allowable load is the maximum load that can be safely applied to a member or component. The stress corresponding to the allowable load is called the *allowable stress*. The allowable stress is often called the *permissible stress*, *working stress* or *design stress*.

Factor of safety is defined as the ratio of the ultimate strength to the allowable stress. It is expressed as,

$$Factor\ of\ safety = \frac{ultimate\ strength}{allowable\ stress} \qquad (1.13)$$

In case of ductile materials e.g. mild steel, where the yield point is clearly defined, the factor of safety may be defined as,

$$Factor\ of\ safety = \frac{yield\ strength}{allowable\ stress} \qquad (1.14)$$

When the stress does not vary linearly with the load, as in the case of some column formulae, the definition may be as follows,

$$Factor\ of\ safety = \frac{ultimate\ load}{allowable\ load} \qquad (1.15)$$

Ultimate load is the load that corresponds to the maximum stress in the stress-strain diagram. Even the failure may occur at the lower load than the ultimate load. Choosing the appropriate factor of safety is the great engineering task. If the very small value of factor of safety is chosen there may be the high possibility of failure. On the other hand, choosing the large value of factor of safety will be uneconomical. To choose the appropriate value of factor of safety for a particular design needs engineering judgment depending on many factors, e.g. variation in material properties, type of loading, uncertainty in calculating stress, environmental condition, danger to life or property, etc.

Question 1.11: Find expressions of work done and stress for a gradually applied load, impact load and suddenly applied load to a member.

Answer:

Gradually Applied Load:

When a load is applied slowly on a member, it is called gradually applied load. Within the elastic limit the load follows the linear variation with the deformation as shown in Figure 1.9. Let an axial load P be applied on an elastic member, which undergoes an elastic deformation of δ, then the work done on the member,

$$U = average\ force \times displacement$$

$$U = \frac{P}{2} \times \delta = \frac{P\delta}{2} \qquad (1.16)$$

Writing spring constant or spring scale $k = P/\delta$, the above equation becomes.

$$U = \frac{k\delta^2}{2} \qquad (1.17)$$

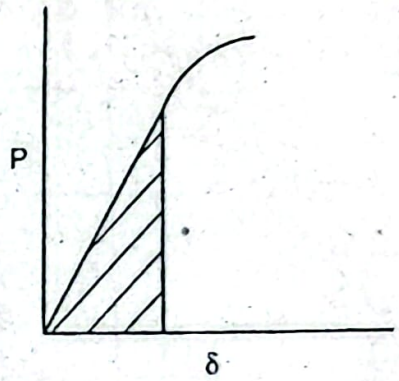

Figure 1.9: Variation of Load with Deformation.

The amount of work done is equal to the elastic energy stored in the member. Within the elastic limit from Hooke's law the strain,

$$\varepsilon = \frac{\sigma}{E}$$

where, σ is the stress developed on the member due to the applied load P. We have deformation $\delta = \varepsilon L$, L being the length of the member. Therefore, the expression of deformation is obtained as,

$$\delta = \frac{\sigma L}{E} \qquad (1.18)$$

Now substituting Equation (1.18) and $P = \sigma A$ in Equation (1.16), the expression of work done becomes,

$$U = \left(\frac{\sigma^2}{2E}\right)(AL) = \left(\frac{\sigma^2}{2E}\right)V \qquad (1.19)$$

where, V = Volume of member. Therefore, the amount of work done per unit volume,

$$\frac{U}{V}=\frac{\sigma^2}{2E} \tag{1.20}$$

Substituting Equation (1.18) in Equation (1.16) and balancing with Equation (1.19), the expression of stress for the gradually applied load,

$$\sigma=\frac{P}{A} \tag{1.21}$$

Impact Load:

When a body strikes another one, in a short interval of time a large force is generated called the *impact* or *impulsive load*. This load is applied suddenly. In a punch press the load generated is known as the impact load. As shown in Figure 1.10, a load P falls freely from rest through a distance h and strikes the stop on the rod. It comes to rest after the rod has deformed by an amount δ. Then the work done on the stop,

$$U=\frac{P}{2}\times\delta=\frac{P\delta}{2}$$

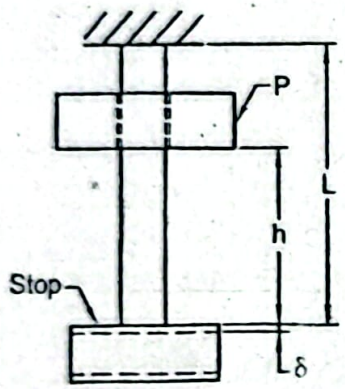

Figure 1.10: A Freely Falling Load.

Now substituting the value of δ from Equation (1.18) and writing, $P=\sigma A$, work done,

$$U=\left(\frac{\sigma^2}{2E}\right)(AL)=\left(\frac{\sigma^2}{2E}\right)V$$

This work done will be equal to the potential energy $P(h+\delta)$, which is converted to the elastic energy. Therefore, we can write,

$$\frac{\sigma^2}{2E}(AL)=P(h+\delta) \tag{1.22}$$

Now substituting the value of δ from Equation (1.18),

$$\sigma^2\frac{AL}{2E}=Ph+\sigma\frac{PL}{E}$$

$$\text{or, } \sigma^2-\sigma\left(\frac{2P}{A}\right)-\frac{2PEh}{AL}=0$$

Solving this quadratic equation, the expression of σ is obtained as,

$$\sigma = \frac{P}{A}\left(1 \pm \sqrt{1 + \frac{2AEh}{PL}}\right)$$

Omitting the negative sign, the expression of stress for the impact load becomes,

$$\sigma = \frac{P}{A}\left(1 + \sqrt{1 + \frac{2AEh}{PL}}\right) \qquad (1.23)$$

When δ is very small compared to h, we find from Equation (1.22),

$$\frac{\sigma^2}{2E}(AL) = Ph$$

$$\text{or, } \sigma = \sqrt{\frac{2EPh}{AL}} \qquad (1.24)$$

Suddenly Applied Load:

When the load is just in contact with the stop but not pressing the stop and then released so that the load suddenly changes from zero to P on the stop; the distance $h = 0$ for this condition. Then the work done,

$$U = P\delta$$

Substituting Equation (1.18) and $P = \sigma A$, we find work done as,

$$U = \left(\frac{\sigma^2}{E}\right)(AL) = \left(\frac{\sigma^2}{E}\right)V \qquad (1.25)$$

Writing $h = 0$ in Equation (1.23), the expression of stress for the suddenly applied load,

$$\sigma = \frac{2P}{A} \qquad (1.26)$$

It indicates that the stress developed for the suddenly applied load is twice the stress in the static condition.

Question 1.12: Write a short note on fatigue load and fatigue strength.

Answer:

The failure of a member under the action of a static load occurs when the stress applied in the member exceeds its limiting value, that is, yield or ultimate strength. When a member is subjected to loading which varies with time is known as *variable loading*. Under the action of the variable loading the stress on the member varies with time. When a rotating shaft is subjected to a bending moment, the same fiber of the shaft alternately undergoes the action of tension and compression in each revolution. If the rpm of the shaft is 1500, then the same fiber will be stressed in tension and compression 1500 times each minute. In Figure 1.11 a shaft is shown which transmits power through a pulley and belt. The fiber A on the shaft will be in tension and the fiber B will be in compression. After half revolution the fibers A and B will undergo the action of compression and tension respectively. This loading will yield the completely reversed sinusoidal stress on each fiber. The stresses may be repeated, alternating or fluctuating depending on the types of loadings. Analysis reveals that this types of member under the action of variable loadings, fail at the stress much below the ultimate strength and quite frequently even

below the yield strength. This load is known as the *fatigue load* and the corresponding failure is called the *fatigue failure*.

A fatigue failure begins with a small crack and this crack gradually propagates due to the load. As a result the stressed area decreases while the stress increases in magnitude and finally the remaining area fails suddenly. The zone of sudden fracture is very similar to that of a brittle material. This crack begins at the point of discontinuity in the body, such as, in a hole, keyway, shoulder, etc. A fatigue failure gives no warning; it is sudden and hence dangerous.

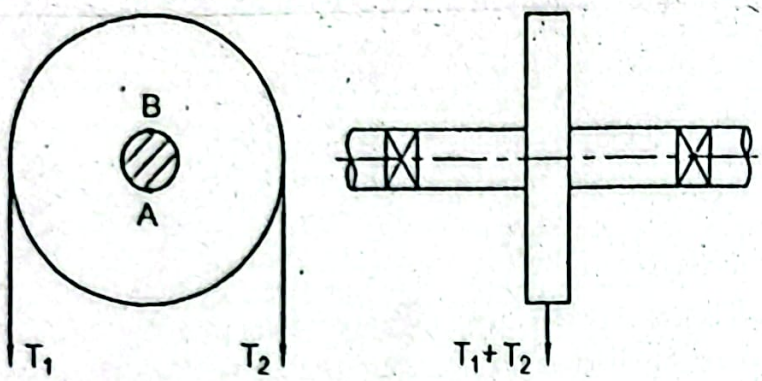

Figure 1.11: Shaft Transmitting Power through a Pulley and Belt.

The most widely used fatigue testing machine is the rotating beam machine devised by R. R. Moore. The nature of loading in this machine is shown in Figure 1.12. It gives a pure bending in the specimen tested. The specimen used is made of polished surface to avoid the effect of surface condition. Changing the loading the number of cycles is recorded until failure occurs. The stress at which the failure occurs is called the *fatigue strength* S_f. A plotting of the fatigue strength and the number of cycles in a log-log paper is shown in Figure 1.13. This is known as *S-N* diagram. This *S-N* diagram is for material of chromium-molybdenum steel, normalized. In the case of steel material a knee is created in the *S-N* diagram as shown in Figure 1.13. The strength corresponding to this knee is called the *endurance limit* or *fatigue limit* S_e. No matter how large is the number of cycles, there will be no failure if the applied stress is below this knee. For the nonferrous metals and alloys, no such knee is found. therefore, for them no endurance limit is obtained. Mean endurance limit for the steel material may be calculated approximately from the following relations.

For $S_u \le 1400MPa$ $\quad S_e = 0.5S_u$ (1.27)

For $S_u \ge 1400MPa$ $\quad S_e = 700MPa$ (1.28)

Endurance limit obtained from the test of rotating beam depends on the effects of many other factors, e.g. surface finish, size of component, loading condition, temperature, stress concentration, etc. Stress concentration occurs in the member due to the discontinuity and this is created by a hole, shoulder, keyway, etc.

In Figure 1.12 the flexure stresses σ_{max} and σ_{min} indicate the maximum and minimum stresses developed in the specimen. For this completely reversed sinusoidal stress

condition $\sigma_{max} = \sigma_{min}$. The stress σ_a indicates the stress amplitude. The mean stress σ_m is equal to zero.

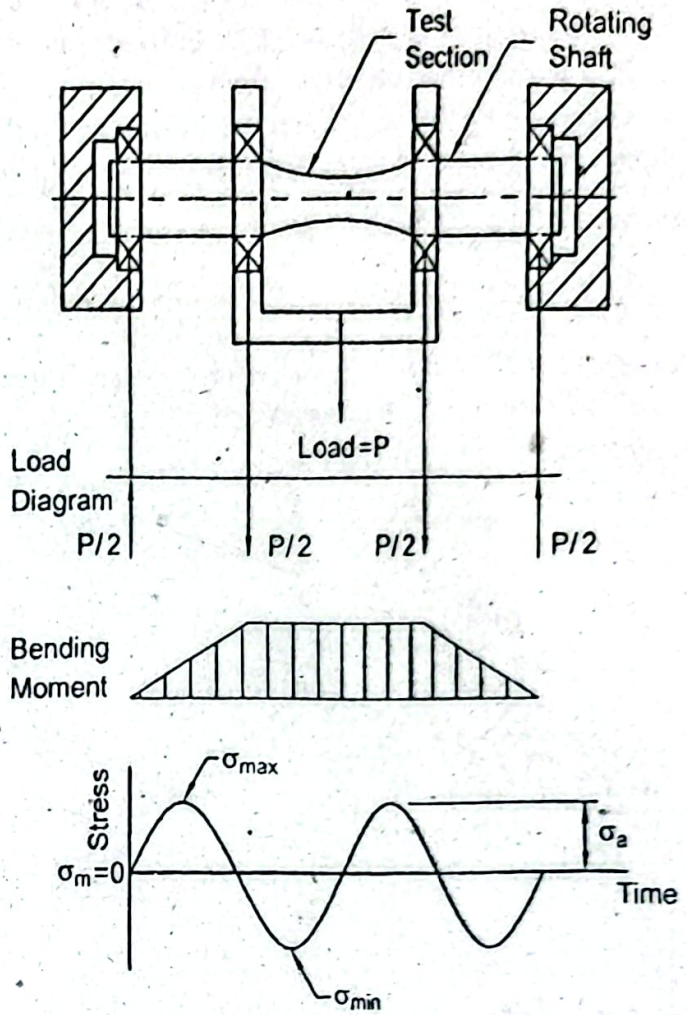

Figure 1.12: Rotating Beam Testing Machine Showing Load, Bending Moment and Sinusoidal Stress.

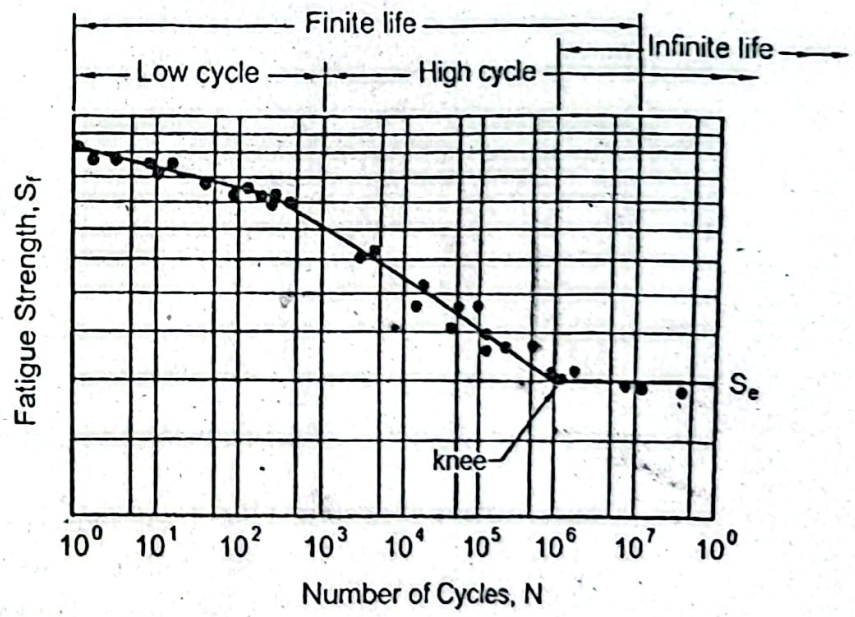

Figure 1.13: *S-N* Diagram for chromium-molybdenum steel, normalized.

Question 1.13: Derive expressions of ... vessel.

Answer:

When a vessel contains the pressurized fluid, it is called *pressure vessel*. A cylindrical pressure vessel may be subjected to three types of stresses: radial, tangential and longitudinal. The *radial stress* is due to the internal pressure, which acts in the radial direction on the surface of the pressure vessel. *Tangential stress* also called *hoof stress* or *circumferential stress* acts along the circumferential direction of the pressure vessel while the longitudinal stress acts along the longitudinal direction of the pressure vessel.

When the wall thickness of a cylindrical pressure vessel is about one twentieth or less of its radius i.e. $t \leq \frac{r}{20}$, t being the thickness and r being the radius of the pressure vessel, the pressure vessel is called the *thin-walled pressure vessel*. In this condition the radial stress is quite small compared to the tangential stress and the tangential stress is distributed uniformly across the wall thickness.

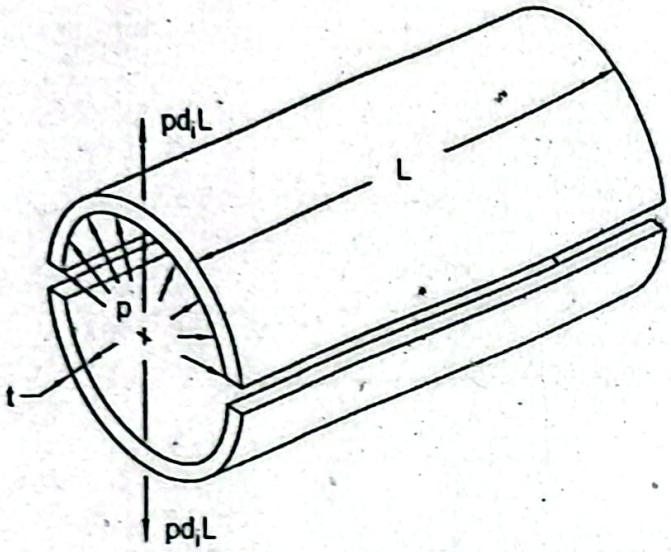

Figure 1.14: A Cylindrical Pressure Vessel.

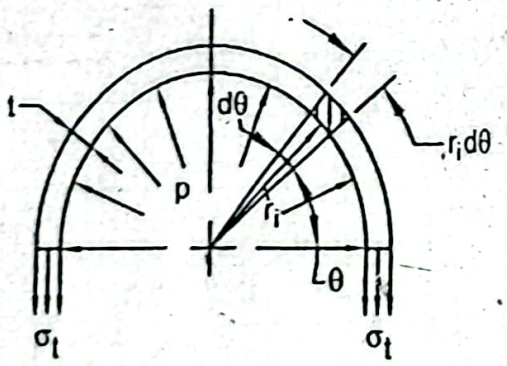

Figure 1.15: Section of a Cylindrical Pressure Vessel Showing Tangential Stress.

In Figure 1.14, a cylindrical pressure vessel is shown. Due to the internal pressure th developed force will have the tendency to separate the cylinder into two halves Following the section of the pressure vessel in Figure 1.15, the vertical component of th force can be obtained as,

$$F_v = \int_0^{\pi} pLr_i \sin\theta d\theta = pd_iL \tag{1.29}$$

where,
p = Internal pressure
L = Length of pressure vessel
r_i = Internal radius of pressure vessel
d_i = Internal diameter of pressure vessel

Summing the vertical component of the forces in the static equilibrium condition, we can write,

$$\sigma_t(2tL) = F_v = pd_iL$$

$$\text{or, } \sigma_t = \frac{pd_i}{2t} \tag{1.30}$$

where,
σ_t = Tangential stress, (Pa)

When the pressure vessel is made with a welded or riveted joint, the weakness of the joint in comparison to the parent metal is taken care of by a *joint efficiency* η, which is defined by,

$$\eta = \frac{minimum\ strength\ of\ joint}{strength\ of\ solid\ plate} \tag{1.31}$$

It is often called the *relative strength*. Introducing η the wall thickness is expressed as.

$$t = \frac{pd_i}{2\sigma_t\eta} \tag{1.32}$$

In a closed cylindrical pressure vessel *longitudinal stress* σ_l as shown in Figure 1.16 exists due to the pressure on the ends of the vessel and this longitudinal stress is obtained from,

$$p\frac{\pi d_i^2}{4} = \sigma_l \pi d_i t$$

$$\text{or, } \sigma_l = \frac{pd_i}{4t} \tag{1.33}$$

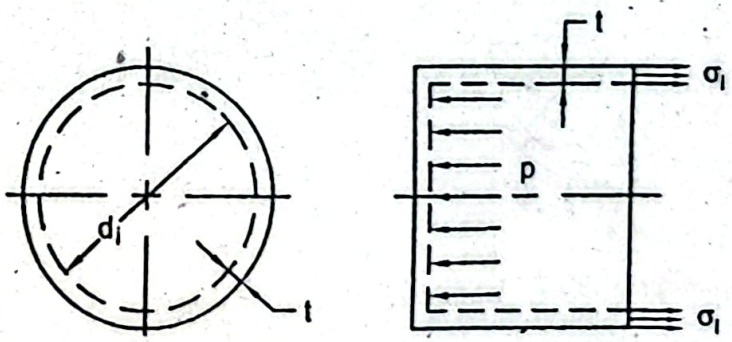

Figure 1.16: A Cylindrical Pressure Vessel Showing Longitudinal Stress.

vessel.

Answer:

In Figure 1.17 a thin-walled spherical pressure vessel is shown. The radial stress in the thin-walled spherical pressure vessel is neglected. The vertical component of force F_v is obtained from the following relation,

$$F_v = p_i \frac{\pi d_i^2}{4} \tag{1.34}$$

where,

p_i = Internal pressure of fluid

d_i = Internal diameter of sphere

The vertical component of force F_v is resisted by the force developed due to the stress in the wall of spherical shell, as such,

$$P = \sigma \pi d_i t \tag{1.35}$$

where,

σ = Stress in the wall of spherical pressure vessel

t = Wall thickness of pressure vessel

Now balancing Equations (1.34) and (1.35), one finds,

$$\sigma = \frac{p_i d_i}{4t} \tag{1.36}$$

It can be noted here that this stress is identical to the longitudinal stress in a cylindrical pressure vessel. Now incorporating the joint efficiency η, the expression of stress in the wall of a spherical pressure vessel becomes,

$$\sigma = \frac{p_i d_i}{4t\eta} \tag{1.37}$$

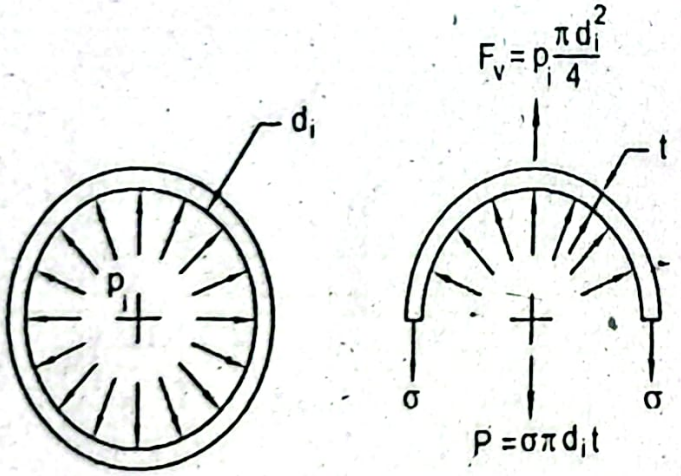

Figure 1.17: A Spherical Pressure Vessel.

Question 1.15: Find expressions of various stresses developed in riveted and bolted joints.

Answer:

A riveted joint consisting of a number of rivets of the same diameter, carries an axial load of P as shown in Figure 1.18. It may be mentioned here that the analysis of riveted and bolted joints can be done on the same principle. The analysis is done based on the assumption that the load is distributed uniformly all over. The center to center distance between the consecutive rivets in the axial and transverse directions are respectively denoted by p_a and p_t as shown in the figure. Each rivet undergoes *direct shear stress* and *bearing stress* (*compressive stress*) while the connecting plate undergoes *tensile stress*, *compressive stress* and *shearing stress* (*tearing stress*) for this loading. Figure 1.19 shows the failure of a rivet by the action of shear. The shearing stress is assumed to be uniformly distributed across the cross-section of the rivet.

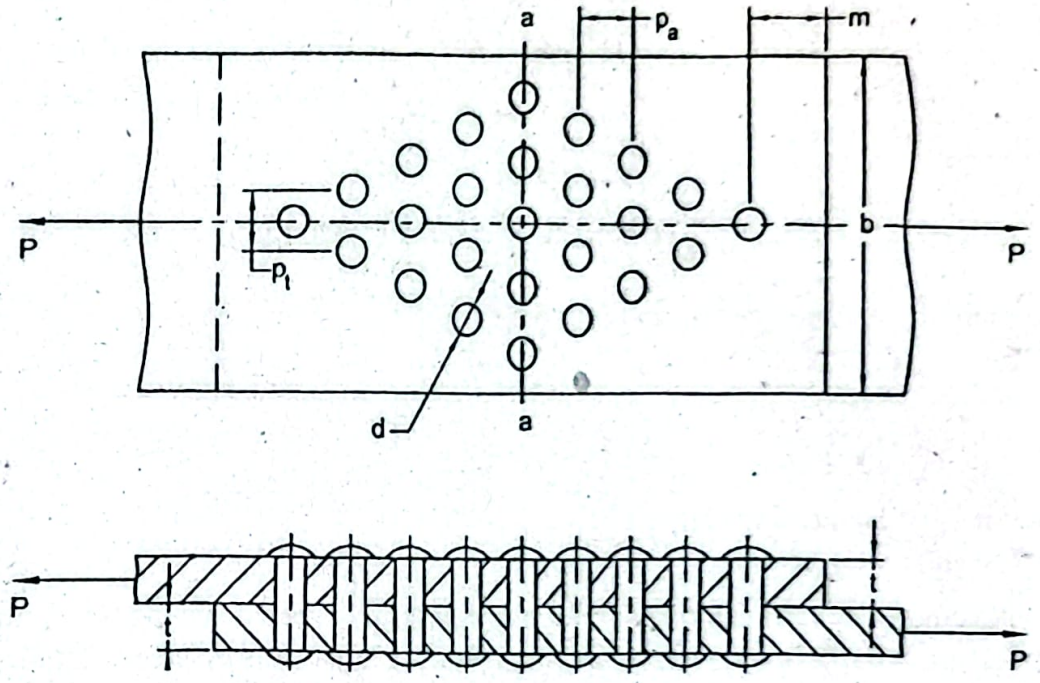

Figure 1.18: A Riveted Joint.

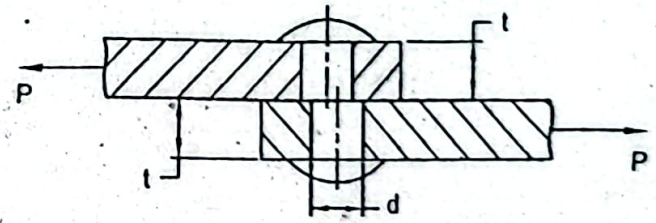

1.19: Shearing Stress in a Rivet.

The *direct shear stress* on each rivet is obtained from,

$$\tau = \frac{P}{A} = \frac{4P}{n\pi d^2} \qquad (1.38)$$

where,

A = Cross-sectional area of all rivets

d = Nominal diameter of rivet
n = Number of rivets

The rivet or plate may fail by crushing due to development of compressive stress in between the rivet and the connecting plate as shown in Figure 1.20. This stress is often called as the *bearing stress*. It is assumed that the bearing stress is uniformly distributed across the projected area of each rivet.

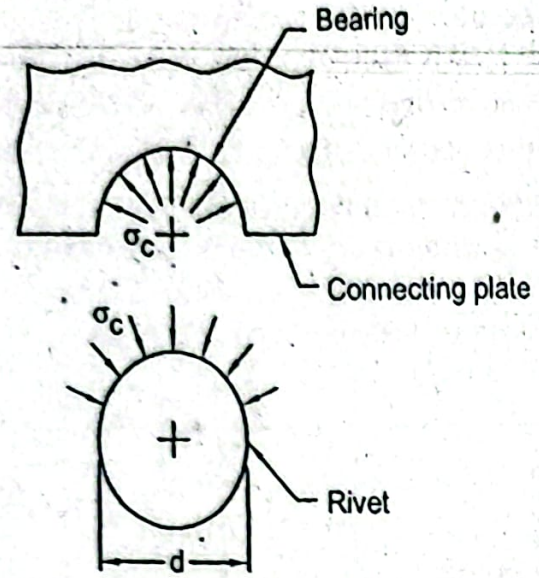

Figure 1.20: Bearing Stress in a Riveted Joint.

The bearing stress is obtained from the expression,

$$\sigma_c = \frac{P}{A} = \frac{P}{ndt} \qquad (1.39)$$

where,
t = Thickness of connecting plate
A = Projected area of bearing

The connecting plate may fail due to tensile stress in the weakest section. In Figure 1.18 the section a-a is the weakest one. In calculating tensile stress it is assumed that this stress is distributed uniformly across the plate area between the rivets. The tensile stress in the connecting plate can be determined from the following relation,

$$\sigma_t = \frac{P}{(b-nd)t} \qquad (1.40$$

where,
b = Width of connecting plate

Another type of failure due to shearing stress may occur in the connecting plate of the riveted joint, which is shown in Figure 1.21. In order to avoid this failure the margin, m as shown in the figure is made larger, that is, $m \geq 1.5d$.

Shearing stress (*tearing stress*) on the connecting plate can be calculated from the following relation,

$$\tau_t = P/(2mt) \qquad (1.41$$

where,
m = Margin (distance between center of rivet and end of connecting plate)

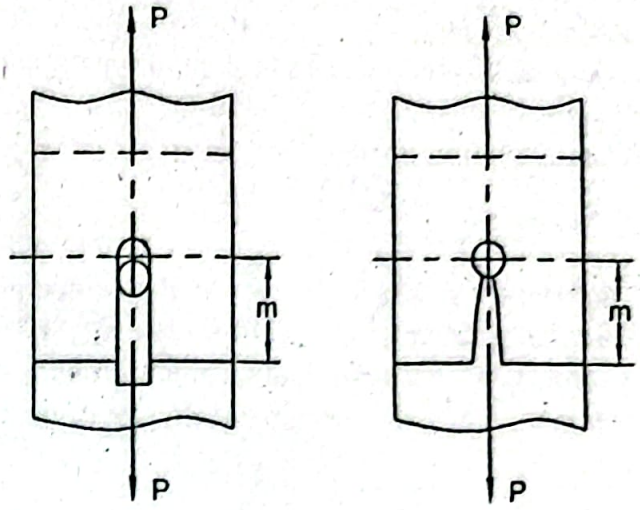

Figure 1.21: Tearing Stress in a Riveted Joint.

Question 1.16: Differentiate between statically determinate and indeterminate structures. Write equations for static equilibrium condition.

Answer:

In statics, a member or structure is called *statically indeterminate*, when the static equilibrium equations are not sufficient to determine the internal forces and reactions on that member or structure. In *static equilibrium condition* for a three-dimensional structure, the static equilibrium equations are,

$$\Sigma \vec{F} = 0 \text{ and } \Sigma \vec{M} = 0 \tag{1.42}$$

The three components of $\Sigma \vec{F} = 0$ along x, y and z directions are respectively,

$$\Sigma F_x = 0,\ \Sigma F_y = 0 \text{ and } \Sigma F_z = 0 \tag{1.43}$$

And three components of $\Sigma \vec{M} = 0$ about x, y and z directions are respectively,

$$\Sigma M_x = 0,\ \Sigma M_y = 0 \text{ and } \Sigma M_z = 0 \tag{1.44}$$

For two dimensional static equilibrium condition writing $\Sigma M_z = \Sigma M$ these equations are reduced to,

$$\Sigma F_x = 0;\ \Sigma F_y = 0 \text{ and } \Sigma M = 0 \tag{1.45}$$

For a statically *determinate structure* the number of equations should be equal to the number of unknowns for determining them. A structure having the number of unknowns more than the number of available equations of equilibrium is known as *indeterminate structure*. For indeterminate structures additional equations can be obtained from stress-strain relations.

For any axially loaded member in static equilibrium condition, the following relation can be used only,

$$\Sigma F_x = 0 \tag{1.46}$$

But when there are more than one unknown in that case for ... further equations will be necessary. For two unknowns the equation of elastic deformation of member i.e. Equation (1.11) can be used as the additional equation for its solution.

Question 1.17: What is thermal stress? Find an expression of thermal stress citing a simple example.

Answer:

When a stress is developed in a member due to the temperature change, it is called *thermal stress*. As the temperature of the member changes, there will be deformation in the member. If the temperature increases, the member expands or vice versa. The linear deformation in the member due to the temperature change is expressed by,

$$\delta_t = \alpha L \Delta T \qquad (1.47)$$

where,

α = Coefficient of expansion, m/m^0C

L = Length, (m)

ΔT = Change of temperature, ^0C

When due to the change of temperature, the deformation of the member occurs freely, no thermal stress will be developed in the member. However, if the change of temperature occurs, when the member is resisted by the rigid support as shown in Figure 1.22, there will be thermal stress in the member. An internal force is developed in the member due to the change of temperature, which creates thermal stress.

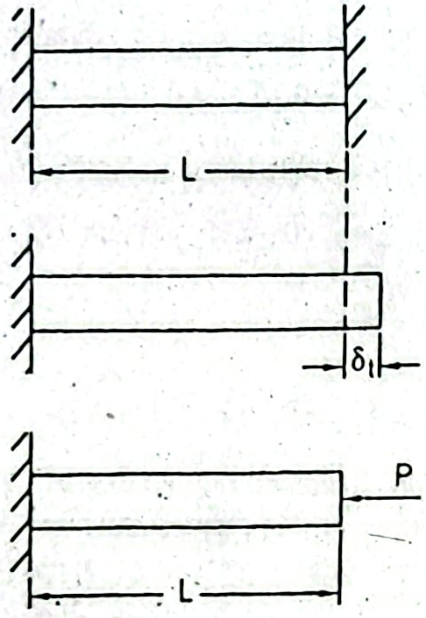

Figure 1.22: A Member Subjected to Thermal Stress.

The expression of thermal stress can be established from the following example. A member of length L is resisted by the two rigid walls as shown in Figure 1.22. This member expands freely by an amount of δ_t, which is obtained by using Equation (1.47). Now if the original length of the member is attained by applying an axial force P on the member, following Equation (1.11) a deformation of δ_p will be obtained as,

$$\delta_p = \frac{PL}{AE} \tag{1.48}$$

Now according to the problem the total deformation of the member is,

$$\delta = \delta_t + \delta_p = 0$$

$$= \alpha L \Delta T + \frac{PL}{AE} = 0$$

Therefore, the expression of load P becomes,

$$P = -AE\alpha\Delta T \tag{1.49}$$

which yields the expression of thermal stress as,

$$\sigma = \frac{P}{A} = -E\alpha\Delta T \tag{1.50}$$

SOLVED PROBLEMS

Problem P1.1:

A body of mass *180kg* is supported by two wires AC, BC as shown in Figure P1.1. Determine the diameter of the wires if the allowable tensile stress is not to exceed *130MPa*.

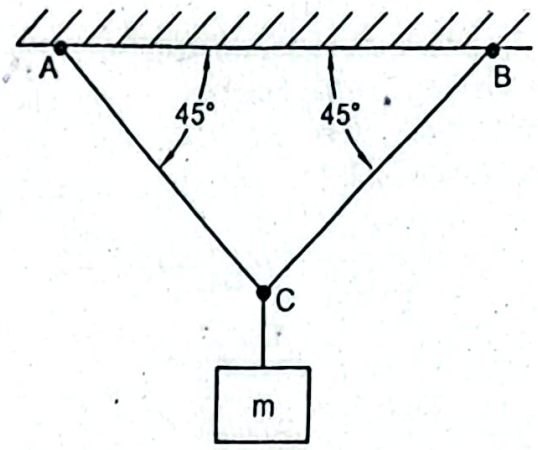

Figure P1.1

Given Data:

Mass of body, $m = 180kg$

Allowable tensile stress, $\sigma_a = 130MPa$

To Find:

Wire diameter, d

Solution:

A free body diagram is shown below.

In static equilibrium condition,

$$+\uparrow \Sigma F_y = 0$$

$$\text{or, } T_{AC}\cos 45^0 + T_{BC}\cos 45^0 - mg = 0 \tag{i}$$

$$+\rightarrow \sum F_x = 0$$

or, $T_{BC} = T_{AC}$ (i

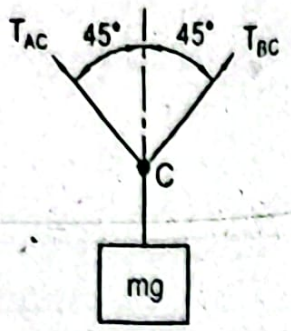

From Equations (i) and (ii) we find,

$$2T_{BC}\cos 45^0 = 180 \times 9.81$$

or, $T_{BC} = 1248.61N$

Tensile stress in the wire, $\sigma = \frac{T_{BC}}{A}$

or, $\sigma_a = 130 = \frac{4 \times 1248.61}{\pi d^2}$

or, $d = 3.5mm$ *Answer*

Problem P1.2:

A load P is suspended by two rods as shown in Figure P1.2. One is the steel rod c diameter $20mm$ and another one is the brass rod of diameter $30mm$. If the limitin stresses of steel and brass are respectively $140MPa$ and $75MPa$, determine th maximum load P that can be suspended.

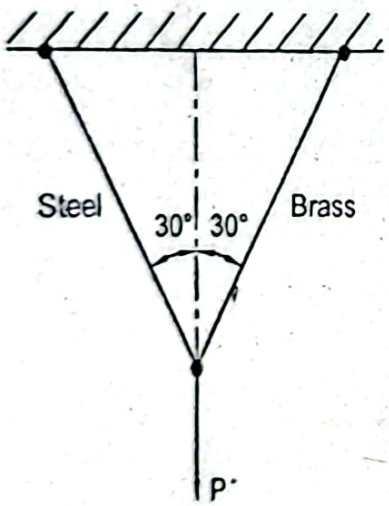

Figure P1.2

Given Data:

Diameter of steel rod, $d_s = 20mm$

Diameter of brass rod, $d_{br} = 30mm$

Limiting stress in steel, $\sigma_{st_a} = 140MPa$

Limiting stress in brass, $\sigma_{br_a} = 75MPa$

To Find:

- Maximum load, P

Solution:

Free body diagram is shown below.

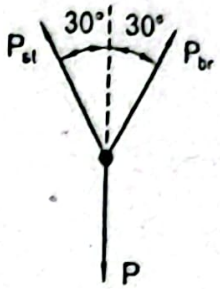

In static equilibrium condition,

$$+\rightarrow \Sigma F_x = 0$$

or, $P_{st} \sin 30^0 = P_{br} \sin 30^0$

or, $P_{st} = P_{br}$ *(i)*

and, $+\uparrow \Sigma F_y = 0$

$$P_{st} \cos 30^0 + P_{br} \cos 30^0 = P$$

or, $P = 0.866\left(P_{st} + P_{br}\right)$ *(ii)*

From Equations *(i)* and *(ii)* we find,

$$P = 1.732 P_{st} = 1.732 P_{br}$$

Now considering the steel rod, $P_{st} = \sigma_{st} \times A_{st} = \sigma_{st_a} \times \frac{\pi d_{st}^2}{4}$

$$= 140 \times \frac{\pi}{4} \times (20)^2 kN$$

$$= 43.98kN$$

Again considering the brass rod, $P_{br} = \sigma_{br} \times A_{br} = \sigma_{br_a} \times \frac{\pi d_{br}^2}{4}$

$$= 75 \times \frac{\pi}{4} \times (30)^2 kN$$

$$= 53.01kN$$

Therefore, the required maximum load that can be suspended,

$$P = 1.732 P_{st}$$

$$= 1.732 \times 43.98kN$$

$$= 76.17kN \text{ Answer}$$

Problem P1.3:

A force P of $50kN$ is applied in the bracket ABC as shown in Figure P1.3. The bracket is supported by a pin at B and a smooth roller at A as shown in the figure. If the shearing yield strength of the pin material is $210MPa$, determine the size of the pin considering safety factor of 2.5.

P sin 30°

2 sin 45

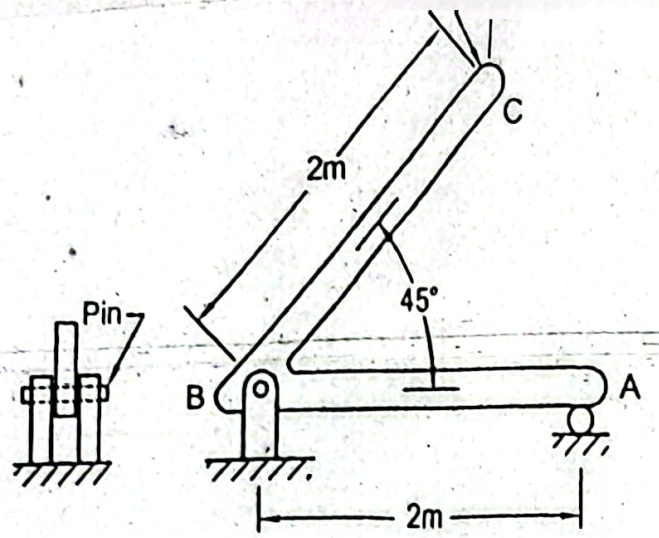

Figure P1.3

Given Data:

Load, $P = 50kN$

Shearing yield strength, $S_{s_y} = 210MPa$

Safety factor, $n = 2.5$

To Find:

- Diameter of pin, d

Solution:

Free body diagram of the bracket is given below.

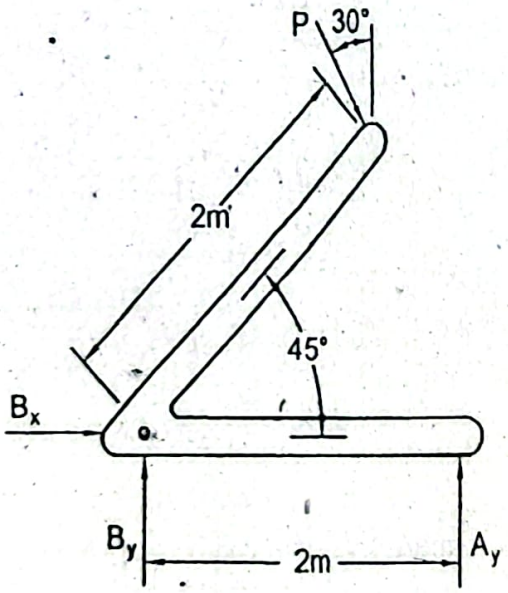

In static equilibrium condition,

$$+\circlearrowleft \Sigma M_B = 0$$

i.e. $A_y \times 2 - P\cos 30^0 \times 2\cos 45^0 - P\sin 30^0 \times 2\sin 45^0 = 0$

or, $A_y \times 2 - 50\times 10^3 \times \cos 30^0 \times 2\cos 45^0 - 50\times 10^3 \times \sin 30^0 \times 2\sin 45^0 = 0$

or, $A_y = 48.30kN$

$$+\uparrow \Sigma F_y = 0$$

$$A_y + B_y - P\cos 30^0 = 0$$

or, $B_y = 50\times10^3 \cos 30^0 - A_y$

or, $B_y = -5kN$

$$+\rightarrow \Sigma F_x = 0 \quad B_x + P\sin 30^0 = 0$$

or, $B_x = -50\times10^3 \times \sin 30^0 = -25kN$

Therefore, reaction, $B = \sqrt{B_x^2 + B_y^2} = \sqrt{(5)^2 + (25)^2}\,kN = 25.50kN$

Shear stress in the pin, $\tau = \frac{B}{A} = \frac{B}{2\times\frac{\pi d^2}{4}}$ (Since double shear occurs in pin)

Allowable shear stress, $\tau_a = \frac{S_{sy}}{n} = \frac{210}{2.5}MPa = 84MPa$

Therefore, $\tau_a = 84 = \frac{25.50\times10^3\times2}{\pi d^2}$

or, $d = 13.9mm$ **Answer**

Problem P1.4:

A weightless rigid bar AB is suspended horizontally by a steel rod CD as shown in Figure P1.4. If the vertical load $P = 30kN$ and the allowable stress for steel in tension is $120MPa$, determine the rod diameter and the elongation of the rod. Consider $E_{st} = 200GPa$.

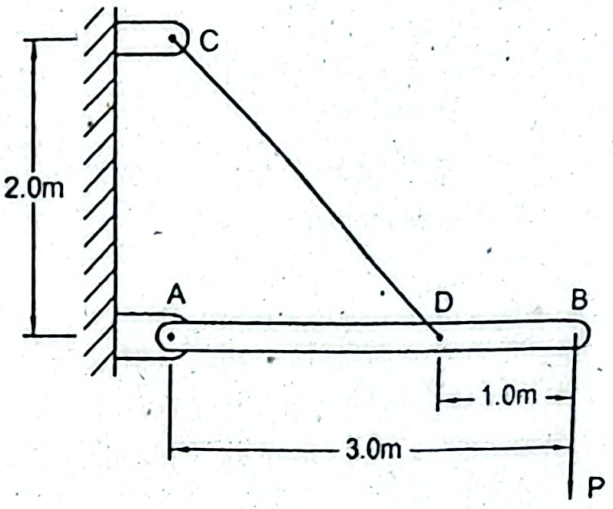

Figure P1.4

Given Data:

Vertical load, $P = 30kN$

Allowable stress in tension, $\sigma_a = 120MPa$

To Find:

Rod diameter, d

Elongation of rod, δ

Solution:

Free body diagram of the rigid bar is shown as follows.

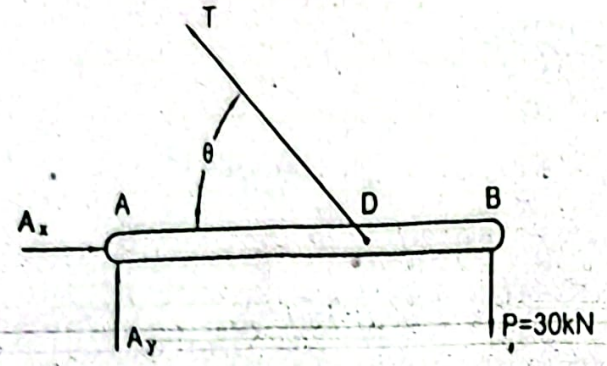

In static equilibrium condition,

$$+\circlearrowleft \Sigma M_A = 0$$

$$-P\times 3 + T\sin\theta \times 2 = 0$$

or, $T\sin\theta \times 2 = 3\times P$

Angle, $\theta = \tan^{-1}\left(\frac{2}{2}\right) = 45^0$

Therefore, $T\sin 45^0 \times 2 = 3\times 30$

or, $T = 63.64kN$

Tensile stress in the rod, $\sigma = \frac{T\times 4}{\pi d^2}$

or, $\sigma_a = 120 = \frac{63.64\times(10)^3\times 4}{\pi d^2}$

or, $d = 25.99mm$ *Answer*

Elongation of the rod, $\delta = \frac{TL}{AE}$

Length, $L = \sqrt{2^2+2^2}\,m = 2.82m$

Therefore, $\delta = \frac{63.64\times(10)^3\times 2.82\times(10)^3\times 4}{\pi\times(25.99)^2\times 200\times(10)^3}mm$

$= 1.7mm$ *Answer*

Problem P1.5:

A $6m$ long steel wire passes over a smooth pulley and supports a mass of $50kg$ a shown in Figure P1.5. If the stress developed in the steel wire is $20MPa$, determine t wire diameter, total elongation and strain in the wire. Consider $E_s = 20GPa$.

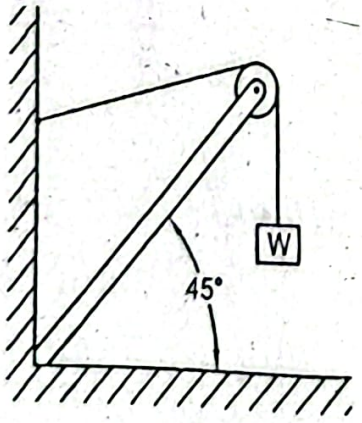

Figure P1.5

Given Data:

Mass, $m = 50kg$

Length of steel wire, $L = 6m$

Stress developed in steel wire, $\sigma = 20MPa$

Modulus of elasticity of steel, $E_s = 200GPa$

To Find:

- Diameter of wire, d
- Total elongation of wire, δ
- Strain in wire, ε

Solution:

Since the pulley is smooth, tension in steel wire,

$$T = W = mg = 50 \times 9.81N = 490.5N$$

Therefore stress in the wire, $\sigma = \frac{T}{A}$

$$\text{or, } \sigma = \frac{4WT}{\pi d^2}$$

$$\text{or, } 20 = \frac{4 \times 490.5}{\pi d^2}$$

$$\text{or, } d = 5.59mm \quad \textbf{Answer}$$

Total elongation of the wire, $\delta = \frac{TL}{AE}$

$$= \frac{490.5 \times 6 \times (10)^3 \times 4}{\pi \times 5.59^2 \times 200 \times (10)^3} mm = 0.6mm \quad \textbf{Answer}$$

Strain in the wire, $\varepsilon = \frac{\delta}{L}$

$$= \frac{0.6}{6 \times (10)^3} \frac{mm}{mm} = 1.0 \times 10^{-4} \frac{mm}{mm} \quad \textbf{Answer}$$

Problem P1.6:

A truss supports a load P of $100kN$ as shown in Figure P1.6. Determine the cross-sectional areas of the bars BD, DC and CE, if the allowable stress in ension or compression is $120MPa$.

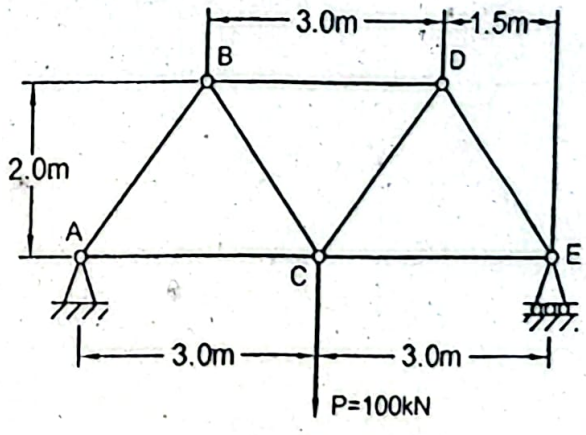

Figure P1.6

Given Data:

Load, $P = 100kN$

Allowable stress in tension or compression, $\sigma_a = 120MPa$

To Find:

- Cross-sectional areas of bars BD, DC and CE.

Solution:

Free body diagram of the entire truss is shown below.

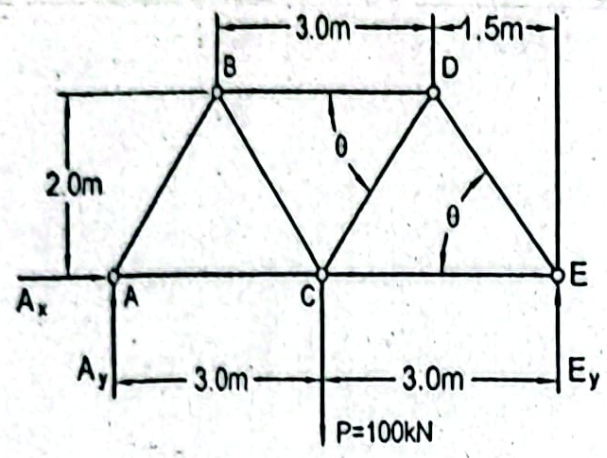

In static equilibrium condition,

$$+\circlearrowleft \Sigma M_A = 0$$

or, $E_y \times 6 - 100 \times 3 = 0$

or, $E_y = 50kN \uparrow$

$$+\circlearrowleft \Sigma F_y = 0$$

or, $A_y + E_y - 100 = 0$

or, $A_y = 100 - E_y = (100 - 50)kN = 50kN \uparrow$

$$+\rightarrow \Sigma F_x = 0 \quad A_x = 0$$

A section of the truss is shown in the following figure.

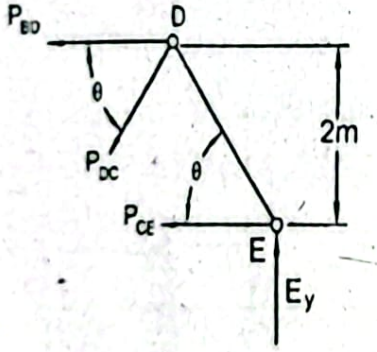

Angle, $\theta = \tan^{-1}\left(\frac{2.0}{1.5}\right) = 53.15^0$

In static equilibrium condition,

$$+\uparrow \Sigma F_y = 0 \quad E_y - P_{DC}\sin\theta = 0$$

or, $P_{DC} = \frac{E_y}{\sin\theta} = \frac{50}{\sin 53.13^0} = 62.5kN$ (Tension)

$$+\circlearrowleft \Sigma M_D = 0 \quad -P_{CE} \times 2 + E_y \times 1.5 = 0$$

or, $$P_{CE} = \frac{E_y \times 1.5}{2} = \frac{50 \times 1.5}{2} kN = 37.5kN \text{ (Tension)}$$

$$+\rightarrow \Sigma F_x = 0 \quad -P_{BD} - P_{DC}\cos\theta - P_{CE} = 0$$

or, $$P_{BD} = -(P_{DC}\cos\theta + P_{CE})$$

$$= -(62.5\cos 53.13^\circ + 37.5)$$

$$= -75kN$$

That is, $P_{BD} = 75kN$ (Compression)

Therefore, the stress in the bar BD,

$$\sigma_{BD} = \frac{P_{BD}}{A_{BD}}$$

or, $$A_{BD} = \frac{P_{BD}}{\sigma_a} = \frac{75 \times 10^3}{120} mm^2 = 625.0mm^2$$ **Answer**

Stress in the bar DC, $$\sigma_{DC} = \frac{P_{DC}}{A_{DC}}$$

or, $$A_{DC} = \frac{P_{DC}}{\sigma_a} = \frac{62.5 \times 10^3}{120} mm^2 = 520.8mm^2$$ **Answer**

Stress in the bar CE, $$\sigma_{CE} = \frac{P_{CE}}{A_{CE}}$$

or, $$A_{CE} = \frac{P_{CE}}{\sigma_a} = \frac{37.5 \times 10^3}{120} mm^2 = 312.5mm^2$$ **Answer**

Problem P1.7:

Find the cross-sectional areas of the members GF, EF and FD in the truss as shown in Figure P1.7 for a load P of $200kN$. Consider allowable stress in tension or compression as $140MPa$.

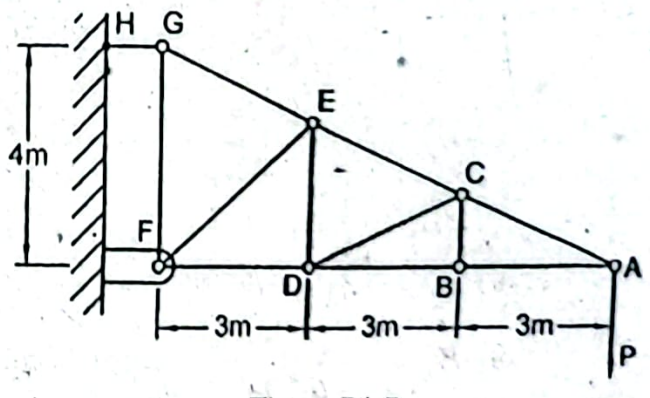

Figure P1.7

Given Data:

Load, $P = 200kN$

Allowable stress in tension or compression, $\sigma_a = 140MPa$

To Find:

- Cross-sectional areas in members GF, EF and FD

Solution:

Free body diagram of the entire truss is given below.

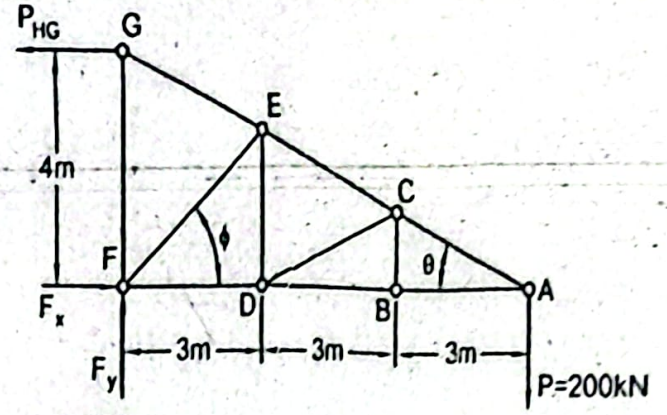

In static equilibrium condition,

$$+\circlearrowleft \Sigma M_F = 0$$

$$-P\times 9 + P_{HG}\times 4 = 0$$

$$\text{or, } P_{HG} = \frac{P\times 9}{4} = \frac{200\times 9}{4} kN = 450kN$$

$$+\uparrow \Sigma F_y = 0$$

$$\text{or, } F_y - P = 0$$

$$\text{or, } F_y = P = 200kN$$

$$+\rightarrow \Sigma F_x = 0$$

$$\text{or, } F_x - P_{HG} = 0$$

$$\text{or, } F_x = P_{HG} = 450kN$$

Now considering joint G as shown below,

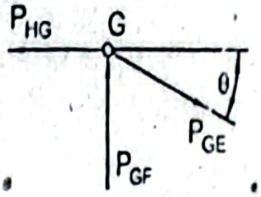

Angle, $\theta = \tan^{-1}\left(\frac{4}{9}\right) = 23.96^0$

$$+\rightarrow \Sigma F_x = 0$$

$$\text{or, } -P_{HG} + P_{GE}\cos\theta = 0$$

$$\text{or, } P_{GE} = \frac{P_{HG}}{\cos\theta} = \frac{450}{\cos 23.96^0} kN = 492.43kN$$

$$+\uparrow \Sigma F_y = 0$$

$$P_{GF} - P_{GE}\sin\theta = 0$$

$$\text{or, } P_{GF} = P_{GE}\sin\theta$$

$$= 492.43\sin 23.96^0 kN = 200kN \text{ (Compression)}$$

Considering joint F as follows,

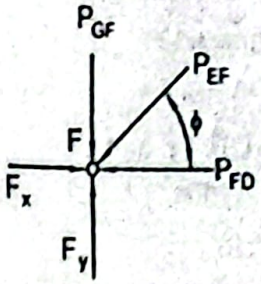

From similar triangles, ΔAFG and ΔADE,

$$\frac{ED}{6} = \frac{4}{9}$$

$$\text{or, } ED = \frac{4}{9} \times 6m = 2.67m$$

Angle,
$$\phi = tan^{-1}\left(\frac{2.67}{3}\right) = 41.63^0$$

$$+\uparrow \Sigma F_y = 0$$

$$\text{or, } F_y - P_{GF} - P_{EF}\sin\phi = 0$$

$$\text{or, } P_{EF} = \frac{F_y - P_{GF}}{\sin\phi} = \frac{200-200}{\sin 41.63^0} = 0kN$$

$$+\rightarrow \Sigma F_x = 0$$

$$\text{or, } F_x - P_{FD} - P_{EF}\cos\phi = 0$$

$$\text{or, } P_{FD} = F_x - P_{EF}\cos\phi$$

$$= 450 - 0 \times \cos 41.63^0$$

$$= 450kN \text{ (Compression)}$$

Therefore, cross-sectional area, $A_{GF} = \frac{P_{GF}}{\sigma_a} = \frac{200 \times 10^3}{140} mm^2 = 1428.57mm^2$ **Answer**

Cross-sectional area, $A_{FD} = \frac{P_{FD}}{\sigma_a} = \frac{450 \times 10^3}{140} mm^2 = 3214.29mm^2$ **Answer**

Cross-sectional area, $A_{EF} = \frac{P_{EF}}{\sigma_a} = \frac{0}{140} = 0mm^2$ **Answer**

Problem P1.8:

A truss is shown in Figure P1.8. Determine the cross-sectional areas of the members DF, EF and EG. Allowable stress in tension or compression is $120MPa$.

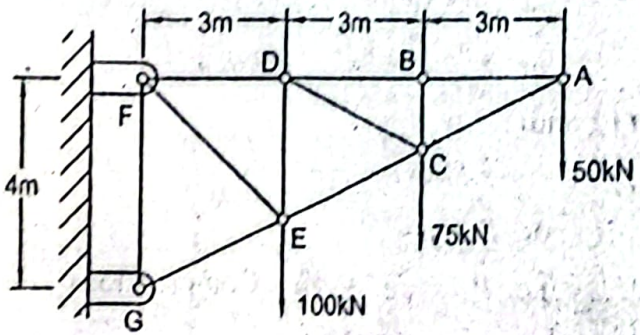

Figure P1.8

Given Data:

Allowable stress in tension or compression, $\sigma_a = 120MPa$

To Find:

Cross-sectional areas of members DF, EF and EG

Solution:

A section of the truss is shown below.

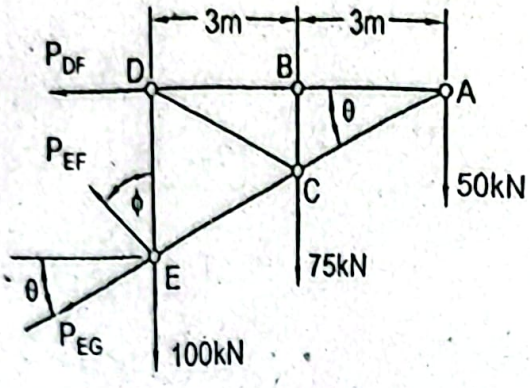

$$\theta = tan^{-1}\left(\frac{4}{9}\right) = 23.96^0$$

From similar triangles ΔADE and ΔAFG,

$$\frac{DE}{6} = \frac{4}{9} \quad \text{or,} \quad DE = 2.67m$$

Angle, $$\phi = tan^{-1}\left(\frac{3}{2.67}\right) = 48.33^0$$

In static equilibrium condition,

$$+\circlearrowleft \Sigma M_E = 0$$

$$\text{or,} \quad -75\times 3 - 50\times 6 + P_{DF}\times 2.67 = 0$$

$$\text{or,} \quad P_{DF} = 196.63kN \text{ (Tension)}$$

$$+\rightarrow \Sigma F_x = 0$$

$$\text{or,} \quad -P_{DF} - P_{EF}\sin\phi - P_{EG}\cos\theta = 0$$

$$\text{or,} \quad 196.63 - P_{EF}\sin 48.33^0 - P_{EG}\cos 23.96^0 = 0$$

$$\text{or,} \quad -P_{EF} - 1.2234P_{EG} = 263.23$$

$$+\uparrow \Sigma F_y = 0$$

$$\text{or,} \quad -100 - 75 - 50 + P_{EF}\cos\phi - P_{EG}\sin\theta = 0$$

$$\text{or,} \quad -225 + P_{EF}\cos 48.33^0 - P_{EG}\sin 23.96^0 = 0$$

$$\text{or,} \quad P_{EF} - 0.611P_{EG} = 338.43$$

Adding Equations (i) and (ii) we find,

$$-1.8944P_{EG} = 601.66$$

$$\text{or,} \quad P_{EG} = -327.99kN$$

i.e. $P_{EG} = 327.99kN$ (Compression)

Now substituting this value in Equation (ii),

or, $P_{EF} = 138.03kN$ (Tension)

Therefore, cross-sectional area of the member DF,

$$A_{DF} = \frac{P_{DF}}{\sigma_a} = \frac{196.63\times10^3}{120} mm^2 = 1638.58mm^2 \quad \textit{Answer}$$

Cross-sectional area of the member EF,

$$A_{EF} = \frac{P_{EF}}{\sigma_a} = \frac{138.03\times10^3}{120} mm^2 = 1150.25mm^2 \quad \textit{Answer}$$

Cross-sectional area of the member EG,

$$A_{EG} = \frac{P_{EG}}{\sigma_a} = \frac{327.99\times10^3}{120} mm^2 = 2738.25mm^2 \quad \textit{Answer}$$

Problem P1.9:

Find the cross-sectional areas of the members AB and BC in the frame as shown in Figure P1.9. Consider allowable stress in tension or compression as $100MPa$.

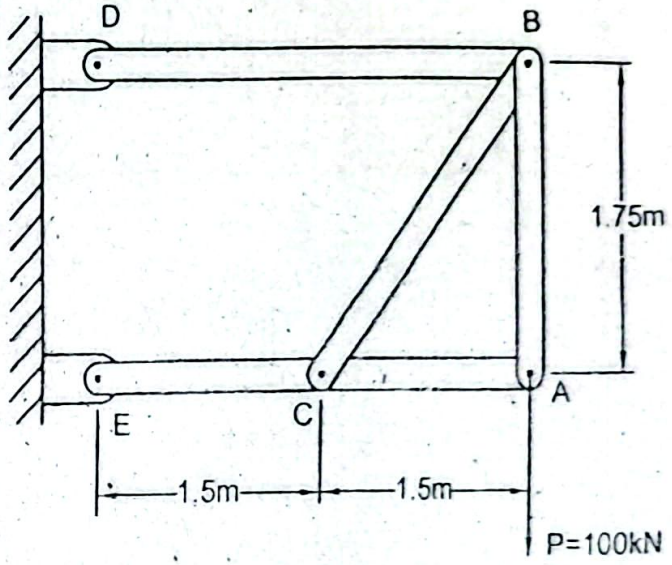

Figure P1.9

Given Data:

Load, $P = 100kN$

Allowable stress in tension or compression, $\sigma_a = 100MPa$

To Find:

- Cross-sectional areas of members AB and BC

Solution:

Free body diagram of the entire frame is given below.

In static equilibrium condition,

$$+\circlearrowleft \Sigma M_D = 0:$$

or, $-100\times3 + E_x \times 1.75 = 0$

or, $E_x = 171.43kN$

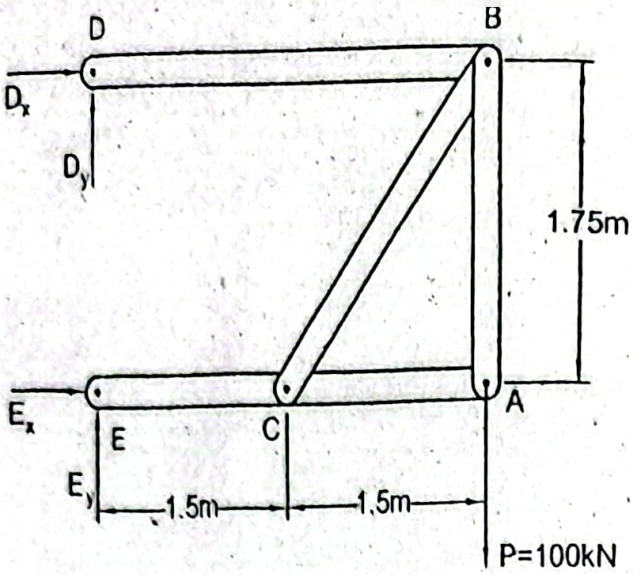

Free body diagram of the member ECA is as follows,

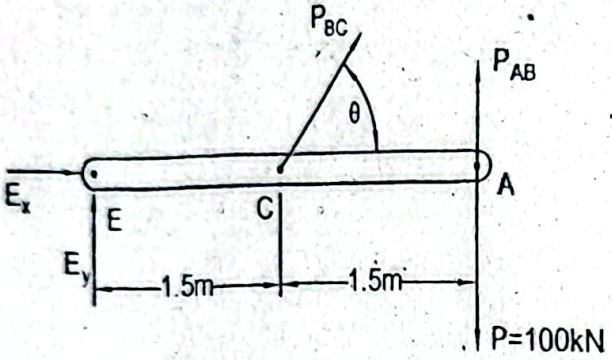

Angle, $\theta = tan^{-1}\left(\frac{1.75}{1.5}\right) = 49.4^0$

$+\rightarrow \Sigma F_x = 0$

or, $E_x + P_{BC}\cos\theta = 0$

or, $171.43 + P_{BC}\cos 49.11^0 = 0$

or, $P_{BC} = -263.42kN$

That is, $P_{BC} = 263.42$ (Compression)

$+\circlearrowleft \Sigma M_E = 0:$

$P_{BC}\sin\theta \times 1.5 + P_{AB} \times 3 - 100 \times 3 = 0$

or, $(-263.42)\sin 49.4^0 \times 1.5 + P_{AB} \times 3 - 300 = 0$

or, $P_{AB} = 200kN$ (Tension)

Therefore, cross-sectional area of the member AB,

$$A_{AB} = \frac{P_{AB}}{\sigma_a} = \frac{200\times10^3}{100} mm^2 = 2000mm^2 \quad \textit{Answer}$$

Cross-sectional area of the member BC,

$$A_{BC} = \frac{P_{BC}}{\sigma_a} = \frac{263.42\times10^3}{100} mm^2 = 2634.2mm^2 \quad \textit{Answer}$$

A homogeneous rigid bar AB of uniform cross-section, length $3m$ and mass $100kg$ is supported by a steel wire and a roller as shown in Figure P1.10. If the allowable stress of steel wire in tension is $130MPa$ and the elongation of steel wire is limited to $0.26mm$, determine the wire diameter. Consider $b = 2a$, $L = 500mm$ and $E_s = 200GPa$.

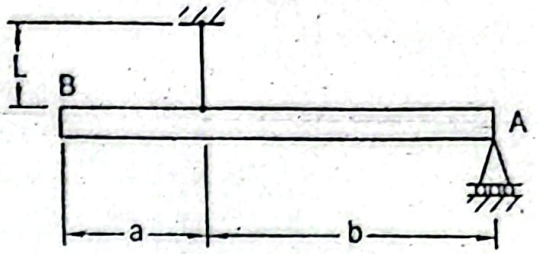

Figure P1.10

Given Data:

Mass of homogeneous bar, $m = 100kg$

Allowable stress in tension for steel wire, $\sigma_a = 130MPa$

Limiting elongation in steel wire, $\delta_a = 0.26mm$

Modulus of elasticity, $E_s = 200GPa$

To Find:

- Wire diameter, d

Solution:

Free body diagram of the rigid bar is shown below.

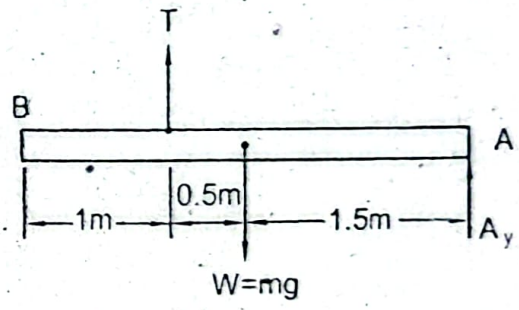

Distance, $b + a = 3m$

or, $2a + a = 3m$

or, $a = 1m$

In static equilibrium condition, $+\circlearrowleft \Sigma M_A = 0$:

or, $-T \times 2 + W \times 1.5 = 0$

where, T is the tension in the steel wire.

$$\text{or, } T = \frac{W \times 1.5}{2} = \frac{100 \times 9.81 \times 1.5}{2} N = 735.75N$$

Tensile stress in the steel wire, $\sigma = \frac{T}{A_s}$

Here, $A_s = \frac{\pi d^2}{4}$ = cross-sectional area of the steel wire.

Therefore, $\sigma = \frac{4T}{\pi d^2}$

or, $\sigma_a = 130 = \frac{4 \times 735.75}{\pi d^2}$

or, $d = 2.68mm$

Elongation in the steel wire, $\delta = \frac{TL}{A_{st} E_{st}}$

or, $\delta_a = \frac{4TL}{\pi d^2 E_{st}}$

or, $0.26 = \frac{4 \times 735.75 \times 500}{\pi d^2 \times 200 \times 10^3}$

or, $d = 3.00mm$

Therefore, the required wire diameter, $d = 3mm$ *Answer*

Problem P1.11:

A rigid horizontal member AB of negligible weight containing a vertical load P i supported by steel and brass bars as shown in Figure P1.11. For $b = 2a$. find a relatio between cross-sections of the steel and brass bars, such that after application of load th member remains horizontal.

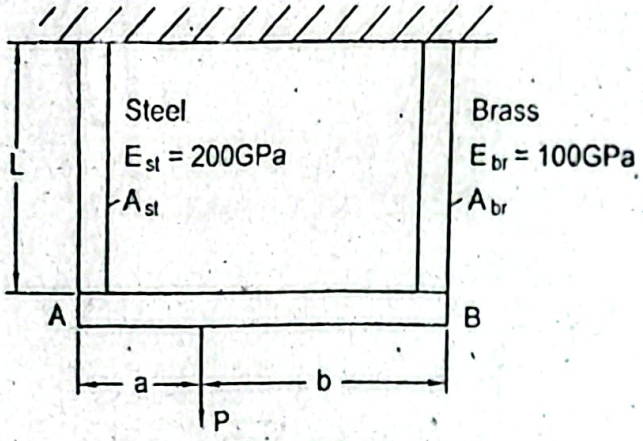

Figure P1.11

Given Data:

Load = P

Modulus of elasticity of steel, $E_{st} = 200GPa$

Modulus of elasticity of brass, $E_{br} = 100GPa$

Distance, $b = 2a$

To Find:

- Relation between A_{st} and A_{br}

Solution:

Free body diagram of the member AB is shown below.

In static equilibrium condition,

$+\circlearrowleft \Sigma M_A = 0:$

or, $-P \times a + P_{br} \times (a+b) = 0$

or, $\frac{a+b}{3a} = \frac{2}{3}$

$+\uparrow \Sigma F_y = 0$

or, $P_{st} + P_{br} - P = 0$

or, $P_{st} = P - P_{br} = P - \frac{P}{3} = \frac{2}{3}P$

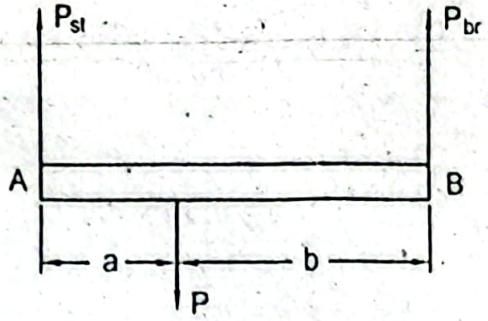

According to the question, the deformation due to application of load in both steel and brass bars will be same, since the member AB remains horizontal after deformation.

Therefore, $\delta_{st} = \delta_{br}$

or, $\frac{P_{st}L}{A_{st}E_{st}} = \frac{P_{br}L}{A_{br}E_{br}}$

or, $\frac{\frac{2}{3}P \times L}{A_{st} \times 200 \times 10^3} = \frac{\frac{1}{3}P \times L}{A_{br} \times 100 \times 10^3}$

or, $A_{st} = A_{br}$ *Answer*

Problem P1.12:

A stepped circular member ABC as shown in Figure P1.12 is subjected to an axial load P of $30kN$. Determine the diameter d in the portion BC and internal diameter d_i in the hollow portion AB if the yield strength of material is $350MPa$ and safety factor to guard against yielding is 2.5. Consider that the stress in the both portions AB and BC remains same.

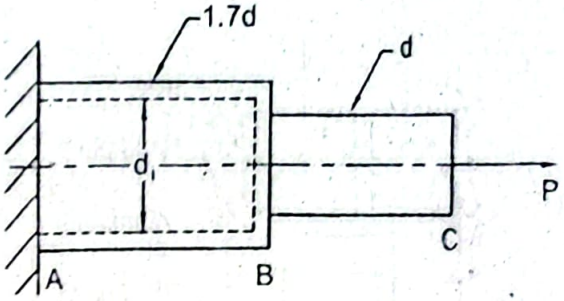

Figure P1.12

Given Data:

Load, $P = 30kN$

Yield strength, $S_y = 350MPa$

Safety factor, $n = 2.5$

To Find:

- Diameter in portion BC, d
- Internal diameter in portion AB, d_i

Solution:

Tensile stress in the portion BC,

$$\sigma_t = \frac{P}{A} = \frac{4P}{\pi d^2}$$

But we have,

$$\sigma_t = \frac{S_y}{n} = \frac{350}{2.5} MPa = 140MPa$$

Therefore,

$$140 = \frac{4 \times 30 \times 10^3}{\pi d^2}$$

or, $d = 16.52mm$

Tensile stress in the portion AB,

$$\sigma_t = \frac{P}{A}$$

or, $$\sigma_t = \frac{4P}{\pi\left[(1.7d)^2 - d_i^2\right]}$$

or, $$140 = \frac{4 \times 30 \times 10^3}{\pi\left[(1.7 \times 16.52)^2 - d_i^2\right]}$$

or, $d_i = 22.71mm$ *Answer*

Problem P1.13:

Three pipes made of steel, aluminum alloy and brass are placed as shown in Fig P1.13. There are two rigid plates between the pipes as shown in the figure. If t allowable compressive stresses for steel, aluminum alloy and brass are respective *130Mpa*, *80Mpa* and *65MPa*, determine the diameter d for axial compressive load of $100kN$, considering thickness t of $3mm$ for each pipe. Find also the total deformati due to this load taking $L_{st} = 50mm$, $L_{al} = 60mm$ and $L_{br} = 65mm$. Use $E_{st} = 200GP$ $E_{al} = 71GPa$ and $E_{br} = 100GPa$.

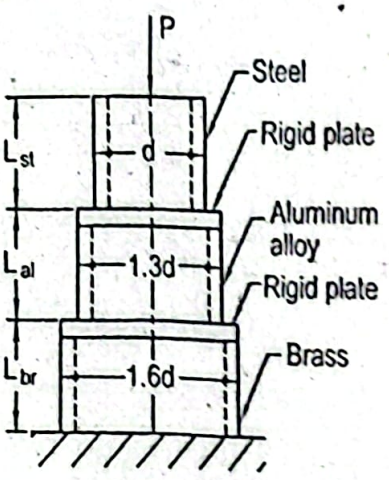

Figure P1.13

Axial compressive load, $P = 100kN$

Length of steel pipe, $L_{st} = 50mm$

Length of aluminum alloy pipe, $L_{al} = 60mm$

Length of brass pipe, $L_{br} = 65mm$

Wall thickness of each pipe, $t = 3mm$

$E_{st} = 200GPa, E_{al} = 71GPa, E_{br} = 100GPa$

Allowable compressive stress for steel, $\sigma_{st_a} = 130GPa$

Allowable compressive stress for aluminum alloy, $\sigma_{al_a} = 80GPa$

Allowable compressive stress for brass, $\sigma_{br_a} = 65GPa$

To Find:

- Diameter of pipe, d
- Total deformation, δ

Solution:

Compressive stress in the steel portion,

$$\sigma_{st} = \frac{P}{A}$$

$$\text{or, } \sigma_{st_a} = \frac{P}{\frac{\pi}{4}\left(d^2 - d_i^2\right)}$$

$$\text{or, } \sigma_{st_a} = \frac{4P}{\pi\left[d^2 - (d-6)^2\right]} \quad [\text{Since } d_i = (d-2t) = (d-6)]$$

$$\text{or, } 130 = \frac{4\times 100\times 10^3}{\pi\left[d^2 - d^2 + 12d - 36\right]}$$

$$\text{or, } d = 84.62mm$$

Compressive stress in the aluminum alloy portion,

$$\sigma_{al} = \frac{P}{A}$$

$$\text{or, } \sigma_{al_a} = \frac{P}{\frac{\pi}{4}\left[(1.3d)^2 - (1.3d-6)^2\right]}$$

$$\text{or, } 80 = \frac{4\times 100\times 10^3}{\pi\left[(1.3d)^2 - (1.3d)^2 + 15.6d - 3d\right]}$$

$$\text{or, } d = 104.33mm$$

Compressive stress in the brass portion,

$$\sigma_{br} = \frac{P}{A}$$

$$\text{or, } \sigma_{br} = \frac{P}{\frac{\pi}{4}\left[(1.6d)^2 - (1.6d-6)^2\right]}$$

$$\text{or, } 65 = \frac{4\times100\times10^3}{\pi\left[(1.6d)^2 - (1.6d)^2 + 19.2d - 36\right]}$$

$$\text{or, } d = 103.90mm$$

Therefore, the required diameter of pipe, $d = 104.33mm$ ***Answer***

Total deflection, $\delta = \delta_{st} + \delta_{al} + \delta_{br}$

$$= \frac{PL_{st}}{A_{st}E_{st}} + \frac{PL_{al}}{A_{al}E_{al}} + \frac{PL_{br}}{A_{br}E_{br}}$$

$$= 100\times10^3\left[\frac{50}{A_{st}\times200\times10^3} + \frac{60}{A_{al}\times71\times10^3} + \frac{65}{A_{br}\times100\times10^3}\right] \quad (i$$

But, $A_{st} = \frac{\pi}{4}\left[d^2 - (d-6)^2\right] = \frac{\pi}{4}\left[(104.33)^2 - (104.33-6)^2\right] = 955.01mm^2$

$$A_{al} = \frac{\pi}{4}\left[(1.3d)^2 - (1.3d-6)^2\right] = \frac{\pi}{4}\left[(1.3\times104.33)^2 - (1.3\times104.33-6)^2\right]$$

$$= 1250mm^2$$

$$A_{br} = \frac{\pi}{4}\left[(1.6d)^2 - (1.6d-6)^2\right] = \frac{\pi}{4}\left[(1.6\times104.33)^2 - (1.6\times104.33-6)^2\right]$$

$$= 1545mm^2$$

Substituting these values in Equation(i) we find,

$$\delta = 100\times10^3\left[\frac{50}{955.01\times200\times10^3} + \frac{60}{1250\times71\times10^3} + \frac{65}{1545\times100\times10^3}\right]$$

$$= 0.125mm \quad \textit{Answer}$$

Problem P1.14:

An axial tensile load P of $150kN$ is applied in a stepped circular member as shown i Figure P1.14. If the allowable tensile stress is not to exceed $120MPa$, determine th diameter d. Also determine the total elongation if $E_{st} = 200GPa$ and $E_{br} = 100GPa$.

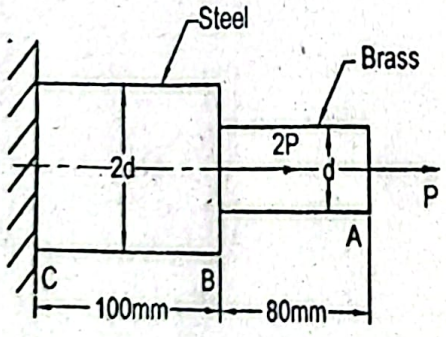

Figure P1.14

Given Data:

Axial load, $P = 150kN$

Modulus of elasticity of steel, $E_{st} = 200GPa$

Modulus of elasticity of brass, $E_{br} = 100GPa$

To Find:

- Diameter, d
- Total elongation, δ

Solution:

Tensile stress in the brass portion AB, $\sigma_{br} = \frac{P}{A}$

$$\text{or, } \sigma_a = 120 = \frac{150\times10^3\times4}{\pi d^2}$$

$$\text{or, } d = 39.89mm$$

Tensile stress in the steel portion BC, $\sigma_{st} = \frac{3P}{A}$

$$\text{or, } \sigma_a = 120 = \frac{3\times150\times10^3\times4}{\pi\times(2d)^2}$$

$$\text{or, } d = 34.55mm$$

Total elongation, $\delta = \delta_{st} + \delta_{br}$

$$= \frac{3P\times L_{st}}{A_{st}E_{st}} + \frac{P\times L_{br}}{A_{br}E_{br}}$$

$$= \frac{3\times150\times10^3\times100}{\frac{\pi\times(2\times39.89)^2}{4}\times200\times10^3} + \frac{150\times10^3\times80}{\frac{\pi(39.89)^2}{4}\times100\times10^3}$$

$$= 0.141mm \quad \textbf{Answer}$$

Problem P1.15:

A stepped circular member is subjected to axial loads as shown in Figure P1.15. where $P = 100kN$. Determine the diameter d, if the strains for steel, alloy and brass portions are limited to $0.63\times10^{-3}m/m$, $1.25\times10^{-3}m/m$ and $0.75\times10^{-3}m/m$ respectively. Consider $E_{st} = 200GPa$, $E_{al} = 71GPa$ and $E_{br} = 100GPa$.

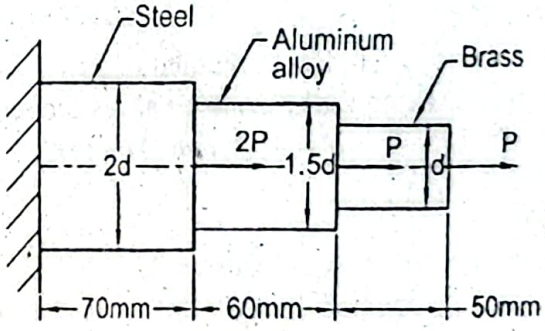

Figure P1.15

Given Data:

Axial load, $P = 100kN$

Limiting strain for steel, $\varepsilon_{st_a} = 0.63\times10^{-3} m/m$

Limiting strain for aluminum, $\varepsilon_{al_a} = 1.25\times10^{-3} m/m$

Limiting strain for brass, $\varepsilon_{br_a} = 0.75\times10^{-3} m/m$

Modulus of elasticity for steel, $E_{st} = 200GPa$

Modulus of elasticity for aluminum, $E_{al} = 71GPa$

Modulus of elasticity for brass, $E_{br} = 100GPa$

To Find:

- Diameter, d

Solution:

In the brass portion strain is given by, $\varepsilon_{br} = \dfrac{P_{br}}{A_{br}E_{br}}$

$$\text{or, } \varepsilon_{br_a} = \frac{4P}{\pi d^2 E_{br}}$$

$$\text{or, } 0.75\times10^{-3} = \frac{4\times100\times10^3}{\pi d^2\times100\times10^3}$$

$$\text{or, } d = 41.20mm$$

In the aluminum portion strain, $\varepsilon_{al} = \dfrac{P_{al}}{A_{al}E_{al}} = \dfrac{P+P}{A_{al}E_{al}}$

$$\text{or, } \varepsilon_{al_a} = \frac{2P}{\frac{\pi(1.5d)^2}{4}E_{al}}$$

$$\text{or, } 1.25\times10^{-3} = \frac{2\times100\times10^3\times4}{\pi(1.5d)^2\times71\times10^3}$$

$$\text{or, } d = 35.71mm$$

In steel the portion strain, $\varepsilon_{st} = \dfrac{P_{st}}{A_{st}E_{st}} = \dfrac{P+P+2P}{A_{al}E_{al}}$

$$\text{or, } \varepsilon_{st_a} = \frac{4P\times4}{\pi(2d)^2E_{st}}$$

$$\text{or, } 0.63\times10^{-3} = \frac{4\times100\times10^3\times4}{\pi\times4\times(d)^2\times200\times10^3}$$

$$\text{or, } d = 31.79mm$$

Therefore, to limit the strains within the allowable values the required diameter,

$$d = 41.20mm \text{ Answer}$$

Problem P1.16:

A composite member is subjected to axial loads as shown in Figure P1.16. Determine th maximum load P that can be applied so that the total deformation is not to exce $0.6mm$ or stresses in steel, aluminum alloy and brass portions are not exceed $140MPa$ $80MPa$ and $75MPa$ respectively. Use $E_{st} = 200GPa, E_{al} = 71GPa, E_{br} = 100GPa$.

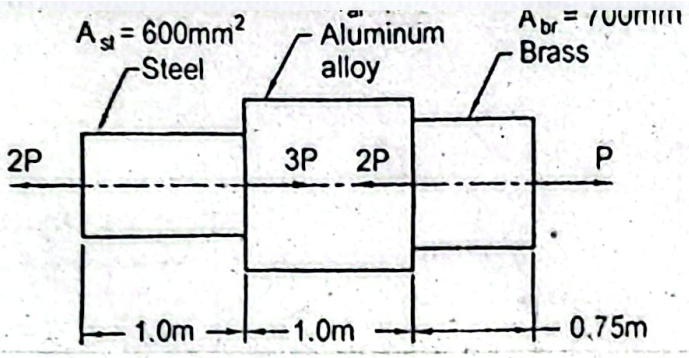

Figure P1.16

Given Data:

Total limiting deformation, $\delta_a = 0.6mm$

Allowable stress in steel portion, $\sigma_{st_a} = 140MPa$

Allowable stress in aluminum portion, $\sigma_{al_a} = 80MPa$

Allowable stress in brass portion, $\sigma_{br_a} = 75MPa$

Cross-sectional area of steel portion, $A_{st} = 600mm^2$

Cross-sectional area of aluminum alloy portion, $A_{al} = 900mm^2$

Cross-sectional area of brass portion, $A_{br} = 700mm^2$

Length of steel portion, $L_{st} = 1.0m$

Length of aluminum alloy portion, $L_{al} = 1.0m$

Length of brass portion, $L_{br} = 0.75m$

Modulus of elasticity of steel, $E_{st} = 200GPa$

Modulus of elasticity of aluminum alloy, $E_{al} = 71GPa$

Modulus of elasticity of brass, $E_{br} = 100GPa$

To Find:

- Maximum load, P

Solution:

Section in the steel portion as shown below,

$$+\rightarrow \Sigma F_x = 0:$$

or, $-2P + P_{st} = 0$

or, $P_{st} = 2P$

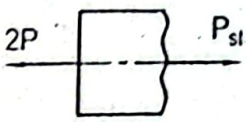

Section in the aluminum alloy portion as shown below,

$$+\rightarrow \Sigma F_x = 0:$$

or, $-2P + 3P + P_{al} = 0$

or, $P_{al} = -P$

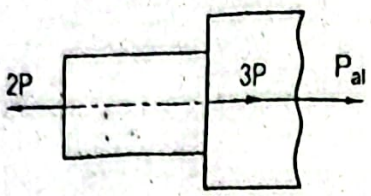

Section in the brass portion as shown below,

$$+\rightarrow \Sigma F_x = 0:$$

or, $-P_{br} + P = 0$

or, $P_{br} = P$

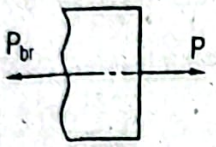

Total deformation, $\delta = \delta_{st} + \delta_{al} + \delta_{br} = \frac{P_{st} L_{st}}{A_{st} E_{st}} + \frac{P_{al} L_{al}}{A_{al} E_{al}} + \frac{P_{br} L_{br}}{A_{br} E_{br}}$

or, $\delta_a = 0.6 = \frac{2P \times 1.0 \times 10^3}{500 \times 200 \times 10^3} - \frac{P \times 1.0 \times 10^3}{900 \times 71 \times 10^3} + \frac{P \times 0.75 \times 10^3}{700 \times 100 \times 10^3}$

or, $P = 39.83kN$

Now stress in the steel portion, $\sigma_{st} = \frac{P_{st}}{A_{st}}$

or, $\sigma_{st_a} = \frac{2P}{A_{st}}$

or, $P = \frac{\sigma_{st_a} A_{st}}{2} = \frac{140 \times 600}{2} kN = 42kN$ (Tension)

Stress in the aluminum alloy portion,

$$\sigma_{al} = \frac{P_{al}}{A_{al}}$$

or, $\sigma_{al_a} = \frac{-P}{A_{al}}$

or, $P = -\sigma_{al_a} \times A_{al} = -80 \times 900N = -72kN$

That is, $P = 72kN$ (Compression)

Stress in the brass portion, $\sigma_{br} = \frac{P_{br}}{A_{br}}$

or, $\sigma_{br_a} = \frac{P}{A_{br}}$

or, $P = \sigma_{br_a} \times A_{br}$

Therefore, the required maximum load, $P = 39.83kN$ *Answer*

Problem P1.17:

A link joint as shown in Figure P1.17 is subjected to a load P of $100kN$. If the allowable stresses in tension and shear are respectively $130MPa$ and $80MPa$, determine the dimensions a and b. Also determine the bearing stress in the joint.

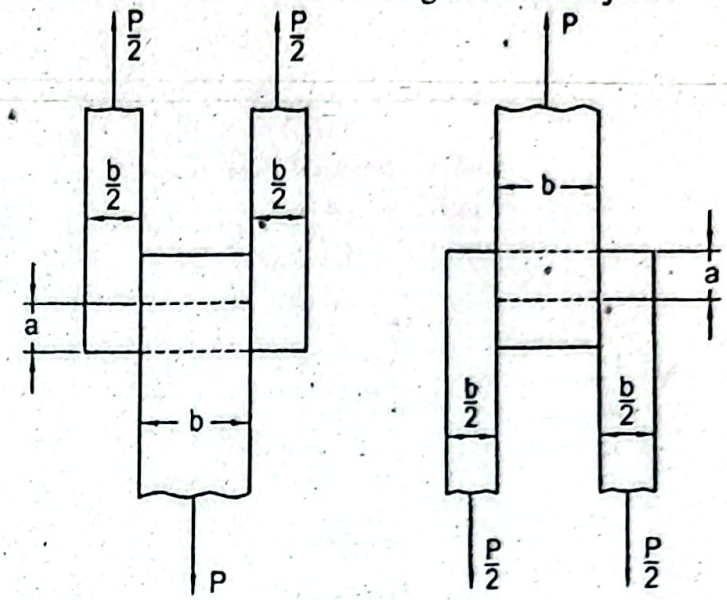

Figure P1.17

Given Data:

Load, $P = 100kN$

Allowable stress in tension, $\sigma_a = 130MPa$

Allowable stress in shear, $\tau_a = 80MPa$

To Find:

- Dimensions, a and b
- Bearing stress, σ_c

Solution:

Tensile stress in the link, $\sigma_t = \dfrac{P/2}{b \times b/2}$

or, $\sigma_a = \dfrac{P}{b^2}$

or, $130 = \dfrac{100 \times 10^3}{b^2}$

or, $b = 27.74mm$ *Answer*

Shear stress in the link, $\tau = \dfrac{P/2}{b \times a}$

or, $\tau_a = \dfrac{P}{2ba}$

or, $80 = \dfrac{100 \times 10^3}{2 \times 27.74 \times a}$

or, $a = 22.53mm$ *Answer*

Bearing stress in the joint, $\sigma_c = \frac{P}{b \times b}$

or, $\sigma_c = \frac{100 \times 10^3}{(27.74)^2}$

or, $\sigma_c = 130MPa$ *Answer*

Problem P1.18:

A yoke connection is subjected to an axial load P of $200kN$ as shown in Figure P1 If the allowable stresses in tension, compression and shear are respectively $125M$ $125MPa$ and $75MPa$, determine the dimensions D, d, t, b, w, a and c.

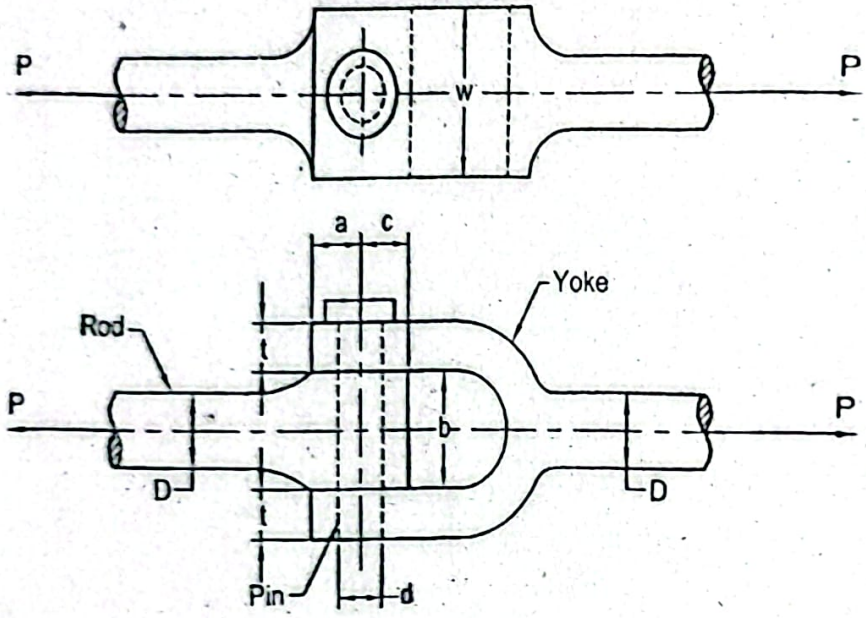

Figure P1.18

Given Data:

Axial load. $P = 200kN$

Allowable stress in tension or compression; $\sigma_a = 125MPa$

Allowable stress in shear, $\tau_a = 75MPa$

To Find:

- Dimensions D, d, t, b, w, a and c

Solution:

Tensile stress in the yoke or rod, $\sigma_t = \frac{P}{A}$

or, $\sigma_a = \frac{4P}{\pi D^2}$

or, $125 = \frac{4 \times 200 \times 10^3}{\pi D^2}$

or, $D = 45.14mm$ *Answer*

$$A$$

$$\text{or, } \tau_a = \frac{P}{2\times\frac{\pi d^2}{4}} = \frac{2P}{\pi d^2}$$

$$\text{or, } 75 = \frac{2\times 200\times 10^3}{\pi d^2}$$

$$\text{or, } d = 41.20mm \text{ Answer}$$

Bearing stress (compressive stress between yoke hole and pin),

$$\sigma_c = \frac{P}{A}$$

$$\text{or, } \sigma_a = \frac{P}{2dt} \text{ (Since projected area, } A = 2dt\text{)}$$

$$\text{or, } 125 = \frac{200\times 10^3}{2\times 41.20\times t}$$

$$\text{or, } t = 19.42mm \text{ Answer}$$

Again, bearing stress (between pin and rod),

$$\sigma_c = \frac{P}{A}$$

$$\text{or, } \sigma_a = \frac{P}{b\times d}$$

$$\text{or, } 125 = \frac{200\times 10^3}{b\times 41.20}$$

$$\text{or, } b = 38.84mm \text{ Answer}$$

Tensile stress in the yoke or rod at the section of hole,

$$\sigma_t = \frac{P}{A}$$

$$\text{or, } \sigma_a = \frac{P}{(w-d)\times b}$$

$$\text{or, } \sigma_a = \frac{P}{(w-d)2t}$$

$$\text{or, } 125 = \frac{200\times 10^3}{(w-41.20)\times 38.84}$$

$$\text{or, } w = 82.40mm \text{ Answer}$$

Shear stress in the yoke, $\tau = \frac{P}{A}$

$$\text{or, } \tau_a = \frac{P}{4ta}$$

$$\text{or, } 75 = \frac{200\times 10^3}{4\times 19.42\times a}$$

$$\text{or, } a = 34.33mm \text{ Answer}$$

Again shear stress in the rod, $\tau = \frac{P}{A}$

or, $\tau_a = \frac{P}{2bc}$

or, $75 = \frac{200 \times 10^3}{2 \times 38.84 \times c}$

or, $c = 34.38mm$ *Answer*

Problem P1.19:

A rigid homogeneous member of uniform cross-section of weight W is suspended by a steel rod and a bronze rod as shown in Figure P1.19. Determine the ratio of the length of the rods so that the member remains horizontal.

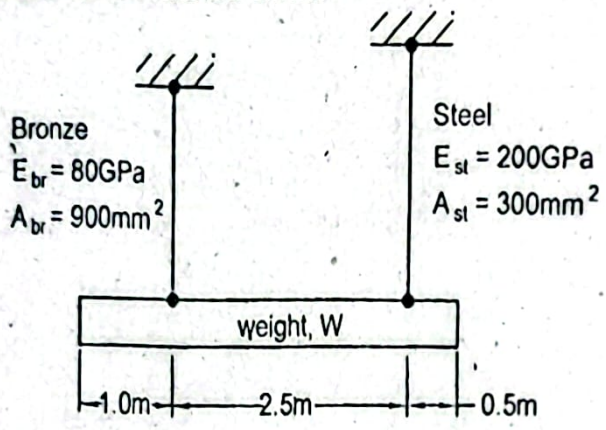

Figure P1.19

Given Data:

Modulus of elasticity of bronze, $E_{br} = 80GPa$

Modulus of elasticity of steel, $E_{st} = 200GPa$

Cross-sectional area of bronze, $A_{br} = 900mm^2$

Cross-sectional area of steel, $A_{st} = 300mm^2$

To Find:

- Ratio of lengths of rods, $\frac{L_{st}}{L_{br}}$

Solution:

Free body diagram of the member is given below.

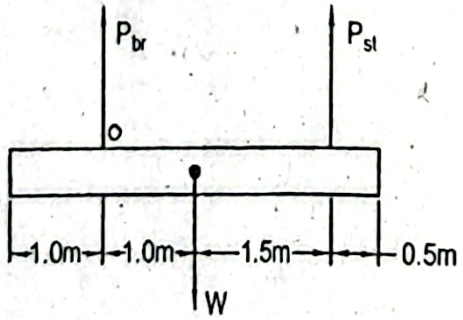

In static equilibrium condition,

$+\circlearrowleft \Sigma M_o = 0:$

$$\text{or, } -W \times 1.0 + P_{st} \times 2.5 = 0$$

$$\text{or, } P_{st} = 0.4W$$

$$+\uparrow \Sigma F_y = 0$$

$$\text{or, } P_{br} + P_{st} - W = 0$$

$$\text{or, } P_{br} = W - P_{st} = W - .04W = 0.6W$$

Since the member remains horizontal, deflections in both the bronze and steel rods will be equal. That is,

$$\delta_{br} = \delta_{st}$$

$$\text{or, } \frac{P_{br} L_{br}}{A_{br} E_{br}} = \frac{P_{st} L_{st}}{A_{st} E_{st}}$$

$$\text{or, } \frac{0.6W \times L_{br}}{900 \times 80 \times 10^3} = \frac{0.4W \times L_{st}}{300 \times 200 \times 10^3}$$

$$\text{or, } \frac{L_{st}}{L_{br}} = 1.25 \text{ Answer}$$

Problem P1.20:

A rigid bar is suspended by two vertical rods as shown in Figure P1.20. The bar remains horizontal before applying the load P. Find the vertical displacement at the point of application of load, if P is $60kN$.

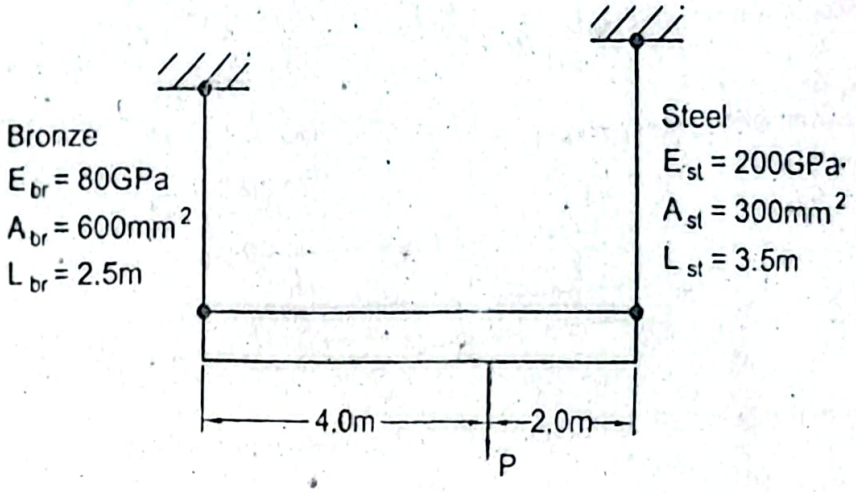

Figure P1.20

Given Data:

Vertical load, $P = 60kN$

Cross-sectional area of bronze, $A_{br} = 600mm^2$

Cross-sectional area of steel, $A_{st} = 300mm^2$

Modulus of elasticity of bronze, $E_{br} = 80GPa$

Modulus of elasticity of steel, $E_{st} = 200GPa$

Length of bronze rod, $L_{br} = 2.5m$

Length of steel rod, $L_{st} = 3.5m$

To Find:

- Vertical displacement at point of application of load, δ

Solution:

Free body diagram of the rigid bar is shown below.

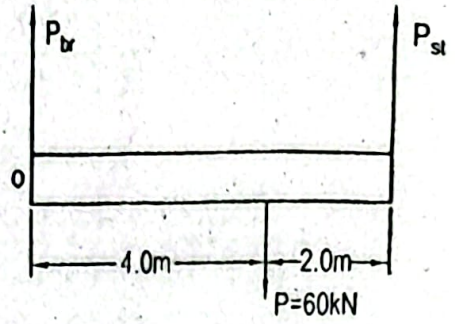

In static equilibrium condition,

$$+\circlearrowleft \Sigma M_o = 0:$$

$$\text{or, } -P\times 4.0 + P_{st}\times 6.0 = 0$$

$$\text{or, } P_{st} = \frac{4}{6}\times P = \frac{4}{6}\times 6.0 = 40kN$$

$$+\uparrow \Sigma F_y = 0$$

$$\text{or, } P_{br} + P_{st} - P = 0$$

$$\text{or, } P_{br} = P - P_{st} = (60-40)kN = 20kN$$

Deflection of the bronze rod, $\delta_{br} = \frac{P_{br}L_{br}}{A_{br}E_{br}} = \frac{20\times 10^3\times 2.5\times 10^3}{600\times 80\times 10^3}mm = 1.0417mm$

and deflection of the steel rod, $\delta_{st} = \frac{P_{st}L_{st}}{A_{st}E_{st}} = \frac{40\times 10^3\times 3.5\times 10^3}{300\times 200\times 10^3}mm = 2.333mm$

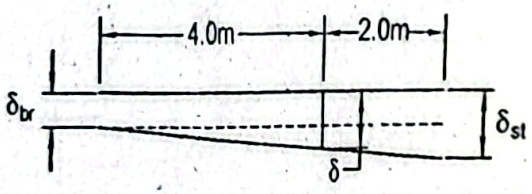

Deflection at the point of application of load as shown in the above figure,

$$\delta = \delta_{br} + \frac{4}{6}(\delta_{st} - \delta_{b})$$

$$\text{or, } \delta = 1.0417 + \frac{4}{6}(2.333 - 1.0417)$$

$$\text{or, } \delta = 1.903mm \text{ Answer}$$

Problem P1.21:

Two steel wires each *1m* long and *1mm* diameter are attached together at the point O a shown in Figure P1.21. Before application of the load the wires were horizontal an stress free. After application of the load at the point O, this point moves downward b *45mm*. Determine the load P and stress in each wire. Consider $E_{st} = 200GPa$.

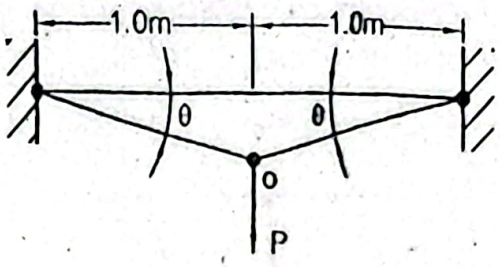

Figure P1.21

Given Data:

Length of wire, $L = 1m$

Diameter of wire, $d = 1mm$

Downward movement of point O $= 45mm$

Modulus of elasticity, $E_{st} = 200GPa$

To Find:

- Load, P
- Stress in each wire, σ

Solution:

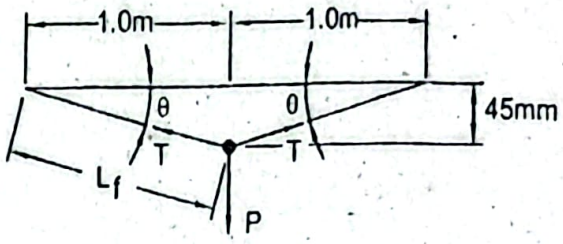

Angle (Figure above), $\theta = \tan^{-1}\left(\frac{45}{1000}\right) = 2.577^0$

In static equilibrium condition, $P = 2T\sin\theta$

$= 2T\sin 2.577^0$

$= 0.0899T$ (i)

Deflection in each wire, $\delta = \frac{TL}{AE}$

$= \frac{T\times 1000}{\frac{\pi\times 1^2}{4}\times 200\times 10^3} = 6.3662\times 10^{-3}T$ (ii)

We find a relation for deflection as,

$\delta = L_f - L$

Length of each wire, $L_f = \frac{1000}{\cos 2.577^0} = 1001.0123mm$

Therefore, deflection, $\delta = (1001.0123 - 1000)mm = 1.0123mm$

Substituting the value of δ in Equation(ii),

$1.0123 = 6.3662\times 10^{-3}T$

or, $T = 159.01N$ ***Answer***

Now stress in each wire, $\sigma = \frac{T\times 4}{\pi d^2} = \frac{159.01\times 4}{\pi\times 1^2}MPa = 202.46MPa$ ***Answer***

A composite circular member is fabricated from brass ... ...gure P1.22. It is subjected to axial loads as shown in the figure. If the total deflection of the member is to be zero, what will be the axial load P_2? Consider $E_{st} = 200GPa$, $E_{br} = 100GPa$.

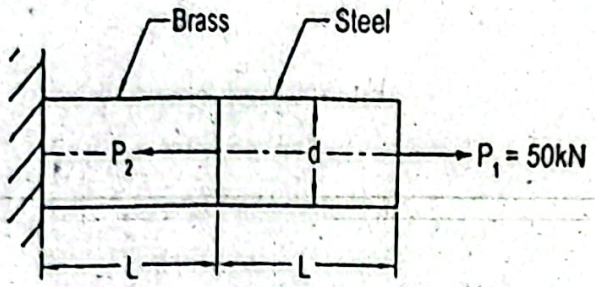

Figure P1.22

Given Data:

Axial load, $P_1 = 50kN$

Modulus of elasticity of steel, $E_{st} = 200GPa$

Modulus of elasticity of brass, $E_{br} = 100GPa$

To Find:

- Axial load, P_2

Solution:

Total deflection is given by, $\delta = \delta_{st} + \delta_{br}$

$$\text{or, } 0 = \frac{P_{st}L_{st}}{A_{st}E_{st}} + \frac{P_{br}L_{br}}{A_{br}E_{br}} \qquad (i)$$

But we have, $A_{st} = A_{br}$ and $L_{st} = L_{br}$

We also have, $P_{st} = P_1$ and $P_{br} = P_1 - P_2$

Substituting these values in Equation(i),

$$0 = \frac{P_1}{E_{st}} + \frac{P_1 - P_2}{E_{br}}$$

$$\text{or, } \frac{P_1}{E_{st}} = \frac{P_2 - P_1}{E_{br}}$$

$$\text{or, } \frac{P_1}{P_2 - P_1} = \frac{E_{st}}{E_{br}} = \frac{200\times10^3}{100\times10^3} = 2$$

$$\text{or, } P_1 = 2P_2 - 2P_1$$

$$\text{or, } 3P_1 = 2P_2$$

$$\text{or, } P_2 = \frac{3}{2}P_1 = \frac{3}{2}\times 50kN = 75kN \text{ Answer}$$

Problem P1.23:

A solid truncated conical steel bar of circular cross-section as shown in Figure P1.23 has uniform taper from $100mm$ to $150mm$. The length of the bar is $250mm$. Determine the maximum axial load P that can be applied if the elongation is not to exceed $0.015mm$. Consider $E_{st} = 200GPa$.

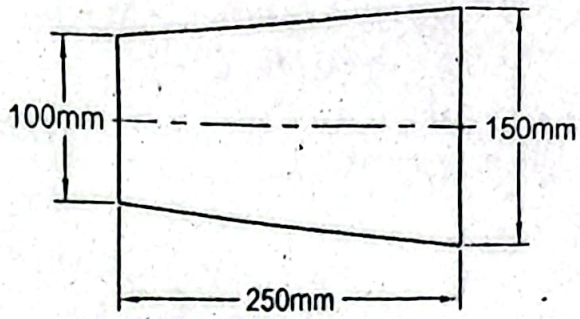

Figure P1.23

Given Data:

Length of truncated conical steel bar, $L = 250mm$

Diameter at small end, $d = 100mm$

Diameter at large end, $D = 150mm$

Modulus of elasticity of steel, $E_{st} = 200GPa$

Limiting elongation, $\delta_a = 0.015mm$

To Find:

- Maximum axial load, P

Solution:

A differential element has been taken in the truncated conical steel bar as shown in the following figure.

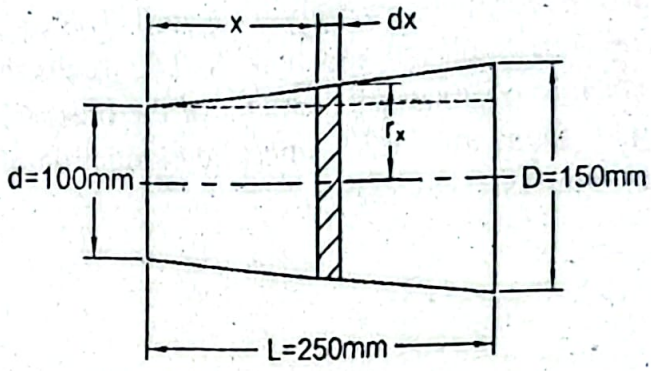

From similar triangles we find, $\dfrac{(150-100)/2}{250} = \dfrac{r_x - 100/2}{x}$

$$\text{or, } r_x = 0.1x + 50 \qquad (i)$$

We have elongation, $\delta = \dfrac{PL}{AL}$

Therefore, elongation for the differential element is given by,

$$d\delta = \frac{pdx}{\pi r_x^2 E}$$

$$\text{or, } \delta = \frac{P}{\pi E}\int \frac{dx}{r_x^2}$$

Substituting the value of r_x from Equation (i) we find,

$$\pi E$$

Let $z = 0.1x + 50$

$$dz = 0.1dx$$

or, $dx = 10dz$

Substituting these values in Equation (ii),

$$\delta = \frac{P}{\pi E}\int \frac{10dz}{z^2}$$

$$\text{or, } \delta = \frac{10P}{\pi E}\left[\left(-\frac{1}{z}\right)\right]$$

$$\text{or, } \delta = -\frac{10P}{\pi E}\left[\left(\frac{1}{0.1x+50}\right)\right]_0^{250}$$

$$\text{or, } \delta_a = -\frac{10P}{\pi E}\left[\frac{1}{75} - \frac{1}{50}\right]$$

$$\text{or, } 0.015 = \frac{10 \times P \times 6.67 \times 10^{-3}}{\pi \times 200 \times 10^3}$$

$$\text{or, } P = 141.30kN \text{ Answer}$$

Problem P1.24:

A weight of unknown magnitude is suspended from a brass wire ($E_{br} = 100GPa$) and the amount of elongation of the wire is carefully measured. The weight is then suspended from an aluminum alloy wire, the length of which is 0.80 times the length of the brass wire and diameter of which is 1.5 times the diameter of the brass wire. The elongation of the aluminum alloy wire is found to be 0.50 times the elongation of the brass wire. Find modulus of elasticity of aluminum alloy wire E_{al}.

Given Data:

Modulus of elasticity of brass, $E_{br} = 100GPa$

Length of aluminum alloy wire, $L_{al} = 0.80 \times$ length of brass wire, L_{br}

Diameter of aluminum alloy wire, $d_{al} = 1.5 \times$ diameter of brass wire, d_{br}

Elongation of aluminum alloy wire, $\delta_{al} = 0.5 \times$ elongation of brass wire, δ_{br}

To Find:

- Modulus of elasticity of aluminum alloy, E_{al}

Solution:

Let W be the unknown weight suspended.

Stress in the brass wire, $\sigma_{br} = \frac{W}{A_{br}} = \frac{4W}{\pi d_{br}^2}$ (i) where, $A_{br} = \frac{\pi d_{br}^2}{4}$

Stress in the aluminum alloy wire, $\sigma_{al} = \frac{W}{A_{al}} = \frac{4W}{\pi d_{al}^2}$ (ii) where, $A_{al} = \frac{\pi d_{al}^2}{4}$

Considering Equations (i) and (ii), we find,

$$\frac{\sigma_{br}}{\sigma_{al}} = \frac{4W}{\pi d_{br}^2} \times \frac{\pi d_{al}^2}{4W}$$

$$\text{or, } \frac{\sigma_{br}}{\sigma_{al}} = \left(\frac{d_{al}}{d_{br}}\right)^2 = 1.5^2 = 2.25 \qquad (iii)$$

Elongation of aluminum alloy wire, $\delta_{al} = \varepsilon_{al} l_{al}$ (iv)

where; ε_{al} is strain of aluminum alloy wire

Elongation of brass wire, $\delta_{br} = \varepsilon_{br} l_{br}$ (v)

where, ε_{br} is strain of brass wire

From Equations (iv) and (v) we obtain,

$$\frac{\delta_{al}}{\delta_{br}} = \frac{\varepsilon_{al} l_{al}}{\varepsilon_{br} l_{br}}$$

$$\text{or, } 0.5 = \frac{\varepsilon_{al}}{\varepsilon_{br}} \times 0.80$$

$$\text{or, } \frac{\varepsilon_{al}}{\varepsilon_{br}} = 0.625 \qquad (vi)$$

Modulus of elasticity of aluminum alloy,

$$E_{al} = \frac{\sigma_{al}}{\varepsilon_{al}} \qquad (vii)$$

Modulus of elasticity of brass, $E_{br} = \frac{\sigma_{br}}{\varepsilon_{br}}$ $(viii)$

Therefore, we find,

$$\frac{E_{al}}{E_{br}} = \frac{\sigma_{al}}{\varepsilon_{al}} \times \frac{\varepsilon_{br}}{\sigma_{br}}$$

$$\text{or, } \frac{E_{al}}{E_{br}} = \frac{1}{\left(\frac{\sigma_{br}}{\sigma_{al}}\right)} \times \frac{1}{\left(\frac{\varepsilon_{al}}{\varepsilon_{br}}\right)}$$

$$\text{or, } \frac{E_{al}}{E_{br}} = \frac{1}{2.25} \times \frac{1}{0.625} = \frac{1}{1.406}$$

$$\text{or, } E_{al} = \frac{E_{br}}{1.406} = \frac{100}{1.406} GPa = 71 GPa \text{ Answer}$$

Problem P1.25:

For a homogeneous member of uniform cross-section A and length L placed vertically along the length, determine the total deformation due to its self weight W. Modulus of elasticity is denoted by E.

Given Data:

Length of member = L
Cross-sectional area = A
Modulus of elasticity = E
Self weight = W

- Deformation due to self weight, δ

Solution:

The following figure shows a member of uniform cross-section. At any distance x f the top surface of the member a differential element dx is considered.

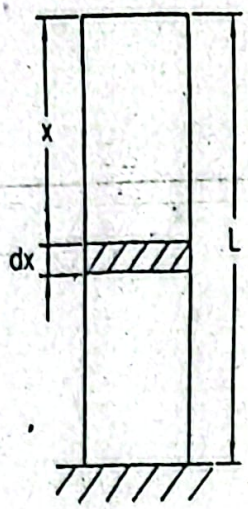

At the distance x from the top surface of the member the weight is W_x.

Then the differential deformation for length dx is given by,

$$d\delta = \frac{W_x dx}{AE}$$

But, weight of the differential volume, $W_x = A.x\gamma$, where γ is the specific weight of t member

Then deformation,

$$\delta = \frac{A\gamma}{AE}\int_0^L x dx$$

$$= \frac{A\gamma}{AE}\left[\frac{x^2}{2}\right]_0^L$$

$$= \frac{A\gamma L^2}{2AE}$$

$$= \frac{(A\gamma L)L}{2AE} \quad \text{where, } W = A\gamma L$$

$$= \frac{WL}{2AE} \quad \textit{Answer}$$

Problem P1.26:

A $6mm$ diameter steel wire is used to lift a load of $0.25ton$ from a depth of $100m$. Determine the total deflection of the wire when the load is at the bottom end including the deflection due to self weight. Consider density of steel $\rho = 7850kg/m^3$ and modulus of elasticity $E_s = 200GPa$.

Given Data:

Load to be lifted, $m = 0.25ton$

Length of wire, $L = 100m$

Density of steel, $\rho = 7850kg/m^3$

Modulus of elasticity of steel, $E_{st} = 200GPa$

To Find:

- Total deflection, δ

Solution:

Deflection due to the load lifted from the bottom end,

$$\delta_1 = \frac{PL}{AE} = \frac{(0.25\times10^3\times9.81)\times100\times10^3}{\left(\frac{\pi\times6^2}{4}\right)\times200\times10^3}mm = 43.37mm$$

Deflection due to the self weight of the steel wire,

$$\delta_2 = \frac{WL}{2AE} = \frac{\left(\frac{\pi\times6^2}{4}\right)\times10^{-6}\times100\times7850\times9.81\times100\times10^3}{2\times\left(\frac{\pi\times36^2}{4}\right)\times200\times10^3}mm$$

$$= 0.0535mm$$

Therefore, the total deflection, $\delta = \delta_1 + \delta_2$

$$= (43.37 + 0.0535)mm = 43.424mm$$ **Answer**

Problem P1.27:

Two steel bars AB and BC support a load P as shown in Figure P1.27. Cross-sectional area of both the bars is $2500mm^2$. If the allowable stress in tension or compression in both the bars is $140MPa$, determine the load P. Also determine the vertical displacement of the point B. Modulus of elasticity of steel $E_{st} = 200GPa$.

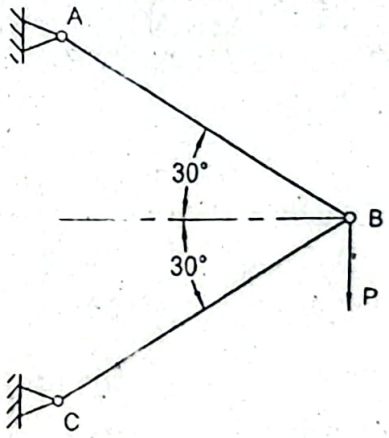

Figure P1.27

Given Data:

Cross-sectional area of bars AB and BC, $A_{AB} = A_{BC} = 2500mm^2$

Allowable stress in tension or compression, $\sigma_a = 140MPa$

Modulus of elasticity of steel, $E_{st} = 200GPa$

To Find:

- Load, P
- Vertical displacement of point B, δ

Solution:

Free body diagram at the joint B as shown in the figure below,

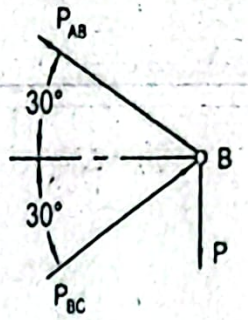

In static equilibrium condition,

$$+\uparrow \Sigma F_x = 0:$$

or, $-P_{AB}\cos 30^0 + P_{BC}\cos 30^0 = 0$

or, $P_{AB} = P_{BC}$

$$+\uparrow \Sigma F_y = 0$$

or, $P_{AB}\sin 30^0 + P_{BC}\sin 30^0 - P = 0$

or, $P = 0.5(P_{AB} + P_{BC})$

Substituting the value of P_{BC} in the above equation,

$$P = 0.5 \times 2P_{AB} = P_{AB} = P_{BC}$$

But, $P_{AB} = \sigma_u A_{AB} = 140 \times 2500kN = 350kN$

Therefore, $P = 350kN$ *Answer*

Now, $L_{AB} = L_{BC} = \dfrac{20}{\cos 30^0} = 2.3074m$

Deformation in the bar AB, $\delta_{AB} = \dfrac{P_{AB}L_{AB}}{A_{AB}E_{st}}$

$$= \frac{350 \times 10^3 \times 2.3074 \times 10^3}{2500 \times 200 \times 1.3} mm$$

$$= 1.6166mm$$

$$\delta_{BC} = -1.6166mm$$

Bar AB has been elongated by an amount δ_{AB} while bar BC has been shortened by a amount δ_{BC} as shown in the following figure. In this figure the deformation has bee exaggerated for clarification. Point B' is the intersecting point of the two arcs. Anothe point B'' has been drawn as the intersecting point of the two normals on the bars. Poir B' is the real point after deformation but here point B'' is considered to find the vertica displacement δ. Since the deformation is very small, it will make negligible error for thi assumption.

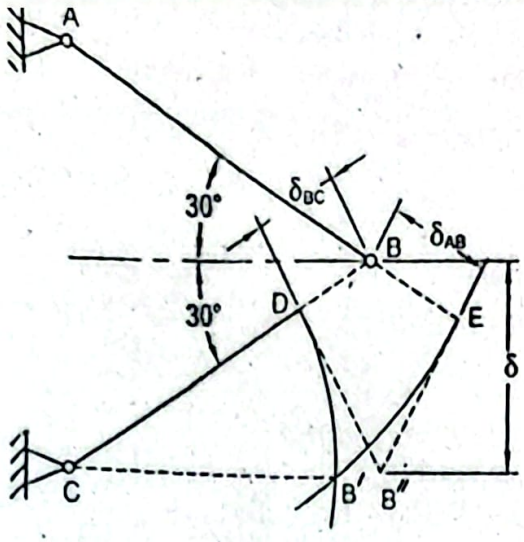

The enlarged view of the dotted portion in the above figure is shown below for convenience.

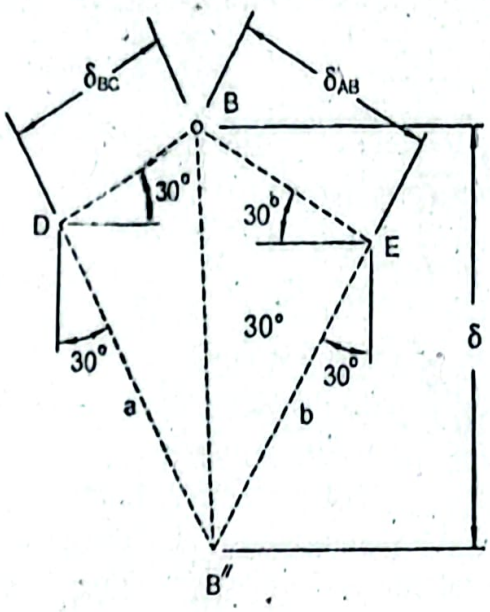

From the above figure, $\delta_{AB}\cos 30^0 + \delta_{BC}\cos 30^0 = a\sin 30^0 + b\sin 30^0$

or, $a+b = 1.732\times 1.6166 + 1.732\times 1.6166 = 5.60$

or, $a+b = 1.732\delta_{AB} + 1.732\times\delta_{BC}$

Again, $\delta_{BC}\sin 30^0 + a\cos 30^0 = \delta_{AB}\sin 30^0 + b\cos 30^0$

or, $a-b = 0.5774\delta_{AB} - 0.5774\delta_{BC}$

or, $a-b = 0.5774\times 1.6166 - 0.5774\times 1.6166 = 0$

or, $a = b$

Hence, $2a = 5.60$

or, $a = 2.80mm = b$

Therefore, the required vertical displacement of point P,

$\delta = \delta_{AB}\sin 30^0 + b\cos 30^0$

$= 1.6166\sin 30^0 + 2.80\cos 30^0$

$= 3.23mm$ *Answer*

Problem P1.28:

A gas transmission pipe line is fabricated by welding joint from the steel plate thickness $6mm$. If the internal diameter of the pipe is $300mm$ and joint efficiency 95%, determine the internal gas pressure if the tangential stress developed in the pipe $100MPa$.

Given Data:

Pipe wall thickness, $t = 6mm$

Internal diameter of pipe, $d_i = 300mm$

Joint efficiency, $\eta = 95\%$

Tangential stress developed, $\sigma_t = 100MPa$

To Find:

- Internal gas pressure; p_i

Solution:

Limiting value of the wall thickness for a thin walled cylinder,

$$t = 6mm \leq \frac{r}{20} = \frac{300}{2 \times 20} = 7.5mm$$

As the thickness of the pipe, $t = 6mm$ it is thin walled.

For a thin walled cylinder tangential stress,

$$\sigma_t = \frac{p_i d_i}{2t\eta}$$

$$\text{or, } 100 = \frac{p_i \times 300}{2 \times 6 \times 0.95}$$

$$\text{or, } p_i = 3.8MPa \text{ Answer}$$

Problem P1.29:

A spherical pressure vessel of internal diameter $400mm$ contains pressurized fluid $3MPa$. The pressure vessel is fabricated by weld joint. Determine the wall thickness of the pressure vessel if the stress developed in the wall of the pressure vessel is $100MPa$. Consider joint efficiency as 94% for the weld joint.

Given Data:

Internal diameter of spherical pressure vessel, $d_i = 400mm$

Internal pressure of fluid, $p_i = 3MPa$

Stress developed in wall, $\sigma = 100Mpa$

Joint efficiency, $\eta = 94\%$

To Find:

- Wall thickness of pressure vessel, t

Solution:

Stress in the wall of a spherical pressure vessel,

$$\sigma = \frac{p_i d_i}{4t\eta}$$

$$\text{or, } 100 = \frac{3 \times 400}{4 \times t \times 0.94}$$

$$\text{or, } t = 3.19mm \text{ Answer}$$

Problem P1.30:

A pressurized gas is transmitted through a circular pipe of internal diameter $750mm$ and wall thickness $12mm$. If the tangential stress developed in the pipe is $125MPa$, determine the internal pressure of gas.

Given Data:

Internal diameter of pipe, $d_i = 750mm$

Wall thickness of pipe, $t = 12mm$

Tangential stress, $\sigma_t = 125MPa$

To Find:

- Internal gas pressure, p_i

Solution:

For a thin walled cylinder tangential stress, $\sigma_t = \frac{p_i d_i}{2t}$

$$\text{or, } 125 = \frac{p_i \times 750}{2 \times 12}$$

$$\text{or, } p_i = 4Mpa$$

Limiting value of the wall thickness for a thin walled cylinder,

$$t \le \frac{r}{20} = \frac{750}{2 \times 20} mm = 18.75mm$$

As the thickness of the pipe, $t = 12mm$ it is thin-walled.

Therefore, the required internal pressure, $p_i = 4MPa$ *Answer*

Problem P1.31:

A cylinder contains a pressurized fluid at $5MPa$. The internal diameter of the cylinder is $120mm$. Yield strength of the cylinder material in tension is $300MPa$. Safety factor is considered as 3 to guard against yielding. Determine the wall thickness of the cylinder based on the tangential stress.

Given Data:

Internal diameter of cylinder, $d_i = 120mm$

Internal pressure of fluid, $p_i = 5MPa$

Yield strength of cylinder material, $S_y = 300MPa$

Safety factor, $n = 3$

To Find:

- Wall thickness, t

Tangential stress for a thin-walled cylinder, $\sigma_t = \frac{p_i d_i}{2t}$

But allowable stress, $\sigma_a = \frac{S_y}{n} = \frac{300}{3} MPa = 100MPa$

Therefore, $\sigma_a = 100 = \frac{5 \times 120}{2 \times t}$

or, $t = 3mm$

Limiting value of the wall thickness for a thin walled cylinder,

$$t = 3.0 \leq \frac{r}{20} = \frac{120}{2 \times 20} mm = 3mm$$

That is, the cylinder is thin-walled.
Therefore, the required wall thickness, $t = 3.0mm$ *Answer*

Problem P1.32:
A spherical tank of internal diameter of $20m$ contains pressurized gas. The tank i fabricated by welding steel plate of $12mm$ thickness. Considering allowable stress a $100MPa$ and 100% joint efficiency, determine the maximum permissible gas pressure Find also the maximum permissible gas pressure when the joint efficiency is 85%.

Given Data:
Internal diameter of spherical tank, $d_i = 20m$
Wall thickness of tank, $t = 12mm$
Allowable stress, $\sigma_a = 100MPa$

To Find:
- Maximum permissible gas pressure. p_i for joint efficiency, $\eta = 100\%$
- Maximum permissible gas pressure, p_i for joint efficiency, $\eta = 85\%$

Solution:
Considering joint efficiency $\eta = 100\%$.

Stress in the wall, $\sigma = \frac{p_i d_i}{4t\eta}$

$$\text{or, } \sigma_a = 100 = \frac{p_i \times 20 \times 10^3}{4 \times 12 \times 1.0}$$

$$\text{or, } p_i = 0.24MPa \text{ Answer}$$

Now considering joint efficiency $\eta = 85\%$,

Stress in the wall, $\sigma = \frac{p_i d_i}{4t\eta}$

$$\text{or, } \sigma_a = 100 = \frac{p_i \times 20 \times 10^3}{4 \times 12 \times 0.85}$$

$$\text{or, } p_i = 0.204MPa \text{ Answer}$$

Problem P1.33:

A cylindrical pressure vessel is fabricated from the steel plate of thickness $10mm$. If the length and internal diameter of the pressure vessel are respectively $2.5m$ and $500mm$, determine the maximum internal pressure that can be applied. Circumferential stress is limited to $80MPa$ and longitudinal stress is limited to $100MPa$.

Given Data:

Thickness, $t = 10mm$

Internal diameter, $d_i = 500mm$

Length of pressure vessel, $L = 2.5m$

Allowable circumferential stress, $\sigma_{t_a} = 80MPa$

Allowable longitudinal stress, $\sigma_{l_a} = 100MPa$

To Find:

- Maximum internal pressure, p_i

Solution:

Limiting value of the wall thickness for a thin walled cylinder,

$$t = 10mm \le \frac{r}{20} = \frac{500}{2\times 20} mm = 12.5mm$$

As the thickness of the pressure vessel, $t = 10mm$ it is thin walled.

Now circumferential stress, $\sigma_t = \frac{p_i d_i}{2t}$

$$\text{or, } \sigma_{t_a} = 80 = \frac{p_i \times 500}{2\times 10}$$

$$\text{or, } p_i = 3.2MPa$$

Longitudinal stress, $\sigma_l = \frac{p_i d_i}{4t}$

$$\text{or, } \sigma_{l_a} = 100 = \frac{p_i \times 500}{4\times 10}$$

$$\text{or, } p_i = 8.0MPa$$

Therefore, the required maximum internal pressure, $P_i = 3.2MPa$ ***Answer***

Problem P1.34:

A $2m$ long thin walled cylinder is fabricated from the steel plate of $6mm$ thickness. The cylinder is closed at both the ends by plates using bolts and gaskets to make leak proof. The internal diameter and internal fluid pressure of the cylinder are respectively $300mm$ and $3MPa$. Determine the final stress in the bolts if the initial stress in the bolts is $40MPa$. Bolt diameter is $18mm$ and number of bolts on each side is 12.

Given Data:

Wall thickness of cylinder, $t = 6mm$

Internal diameter of cylinder, $d_i = 300mm$

Internal pressure of fluid, $p_i = 3MPa$

Diameter of bolts, $d_b = 18mm$

Number of bolts on each side, $n = 12$

To Find:

- Final stress in bolts, σ_f

Solution:

Since the force developed at the end of the cylinder due to the fluid pressure is equal t the tensile force in the bolts, we can write,

$$\frac{\pi d_i^2}{4} \times p_i = n \times \frac{\pi d_b^2}{4} \times \sigma_b^2$$

where, σ_b is the stress developed in the bolt due to the internal fluid pressure.

Hence, $p_i d_i^2 = n d_b^2 \sigma_b$

or, $3 \times (300)^2 = 12 \times (18)^2 \times \sigma_b$

or, $\sigma_b = 69.44MPa$

Therefore, the final stress in bolt,

$\sigma_f = \sigma_i + \sigma_b$

$= (40 + 69.44)MPa = 109.44MPa$ ***Answer***

Problem P1.35:

Steam flows through a circular pipe of internal diameter $300mm$. The pipe is sealed a one end using a gasket between a flange and an end plate. Twelve numbers of bolts are used to tighten the end plate such that the bolts are initially stressed to $50MPa$. Determine the bolt diameter and wall thickness of the cylinder if the maximum stress in the bolt is not to exceed $90MPa$ and the internal steam pressure is $4MPa$, when the tangential stress developed in the cylinder is $100MPa$.

Given Data:

Internal diameter of cylinder, $d_i = 300mm$

Internal pressure of steam, $p_i = 4MPa$

Initial stress in bolts, $\sigma_i = 50MPa$

Allowable stress in bolt, $\sigma_a = 90MPa$

Tangential stress developed in cylinder, $\sigma_t = 100MPa$

Number of bolts, $n = 12$

To Find:

- Bolt diameter, d_b
- Wall thickness, t

Solution:

Force developed on the end plate due to the internal pressure p_i,

$$P = p_i \times \frac{\pi d_i^2}{4}$$

$$= 4 \times \frac{\pi \times (300)^2}{4}$$

$$= 282.74kN \quad (i)$$

Stress developed in the bolt due to the steam pressure,

$$\sigma_b = (\sigma_a - \sigma_i)$$

$$= (90 - 50)MPa$$

$$= 40MPa$$

Therefore, the force developed in the bolts due to σ_b,

$$P_b = n\sigma_b \times \frac{\pi d_b^2}{4}$$

$$= 12 \times 40 \times \frac{\pi d_b^2}{4}$$

$$= 376.99 d_b^2 \quad (ii)$$

Now balancing Equations (i) and (ii),

$$376.99 d_b^2 = 282.74 \times 10^3$$

or, $d_b = 27.39mm$ ***Answer***

For a thin walled cylinder tangential stress,

$$\sigma_t = \frac{b_i d_i}{2t}$$

or, $$100 = \frac{4 \times 300}{2t}$$

or, $t = 6mm$

Limiting value of the wall thickness for a thin walled cylinder,

$$t = 6mm \le \frac{r}{20} = \frac{300}{2 \times 20} mm = 7.5mm$$

As the wall thickness, $t = 6mm$ it is thin walled.

Therefore, the required wall thickness, $t = 6mm$ ***Answer***

Problem P1.36:

A cylindrical pressure vessel made of steel plate having internal diameter of $400mm$ and wall thickness of $4mm$, contains pressurized fluid at $3MPa$. Determine the circumferential strain (a) when the longitudinal stress is absent (b) when the longitudinal stress is present. Consider Poisson's ratio $\nu = 0.3$ and $E_{st} = 200GPa$.

Given Data:

Internal diameter, $d_i = 400mm$

Wall thickness, $t = 4mm$

Internal fluid pressure, $p_i = 3MPa$

Poisson's ratio, $\nu = 0.3$

Modulus of elasticity of steel, $E_{st} = 200GPa$

To Find:

- Circumferential strain, ε_t when longitudinal stress is absent
- Circumferential strain, ε_t when longitudinal stress is present

Solution:

(a) Circumferential stress, $\sigma_t = \frac{p_i d_i}{2t}$

$$= \frac{3 \times 400}{2 \times 4} MPa = 150 MPa$$

Therefore, the required circumferential strain,

$$\varepsilon_t = \frac{\sigma_t}{E} = \frac{150}{200 \times 10^3} mm/mm = 7.5 \times 10^{-4} mm/mm \text{ Answ}$$

(b) Longitudinal stress, $\sigma_l = \frac{p_i d_i}{4t}$

$$= \frac{3 \times 400}{4 \times 4} MPa = 75 MPa$$

Therefore, the required circumferential strain,

$$\varepsilon_t = \frac{\sigma_t}{E} - \frac{\nu \sigma_l}{E}$$

$$= (150 - 0.3 \times 75) \times \frac{1}{200 \times 10^3} mm/mm$$

$$= 6.375 \times 10^{-4} mm/mm \text{ Answer}$$

Problem P1.37:

In the connection as shown in Figure P1.37 an axial load $P = 15kN$ is appli Determine (a) the rivet size d for allowable shearing stress of $65MPa$, (b) the bear stress σ_c for this rivet size and (c) the width of the connecting plate consider allowable tensile stress σ_a equal to bearing stress σ_c.

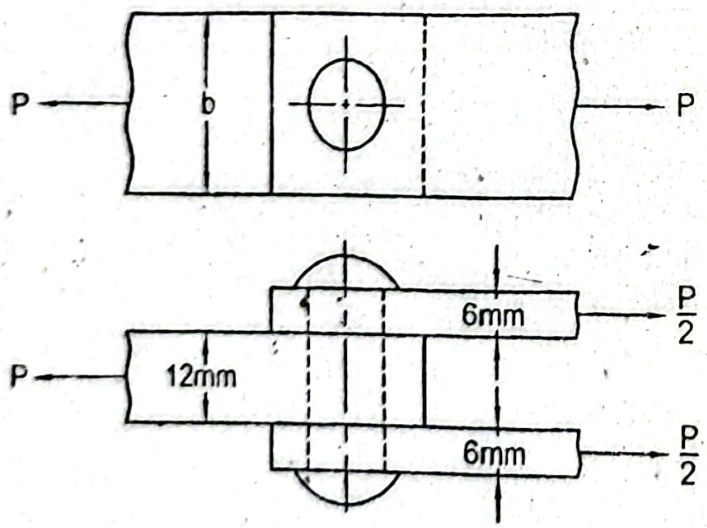

Figure P1.37

Given Data:

Applied load, $P = 15kN$

Allowable shearing stress, $\tau_a = 65MPa$

Allowable tensile stress, $\sigma_a = \sigma_t$

To Find:

- Rivet diameter, d
- Bearing stress, σ_c
- Width of plate, b

Solution:

(a) Shearing stress in the rivet, $\tau = \dfrac{P}{A}$

For double shear, $A = 2 \times \dfrac{\pi d^2}{4} = \dfrac{\pi d^2}{2}$

Therefore, $\tau = \dfrac{2P}{\pi d^2}$

or, $\tau_a = 65 = \dfrac{2 \times 15 \times 10^3}{\pi d^2}$

or, $d = 12.12mm$ ***Answer***

(b) Bearing stress, $\sigma_c = \dfrac{P}{A}$

Here the projected area, $A = 12d$

Therefore, $\sigma_c = \dfrac{P}{12d}$

$= \dfrac{15 \times 10^3}{12 \times 12.12} MPa = 103.14MPa$ ***Answer***

(c) Tensile stress in plate, $\sigma = \dfrac{P}{A}$

Here area, $A = (b - d) \times 12 = (b - 12.12) \times 12$

Therefore, $\sigma = \sigma_a = \dfrac{P}{(b - 12.12) \times 12}$

Now making the allowable tensile stress equal to the bearing stress we find,

$$103.14 = \frac{P}{(b - 12.12) \times 12}$$

or, $103.14 = \dfrac{15 \times 10^3}{(b - 12.12) \times 12}$

or, $b = 24.24mm$ ***Answer***

Problem P1.38:

In the connection as shown in Figure P1.38 an axial load $P = 50kN$ is applied. Determine the rivet diameter d, if the allowable shear stress τ_a and allowable bearing stress σ_c are respectively $75MPa$ and $125MPa$. Also determine the width of the plate b considering allowable tensile stress $\sigma_a = 125MPa$.

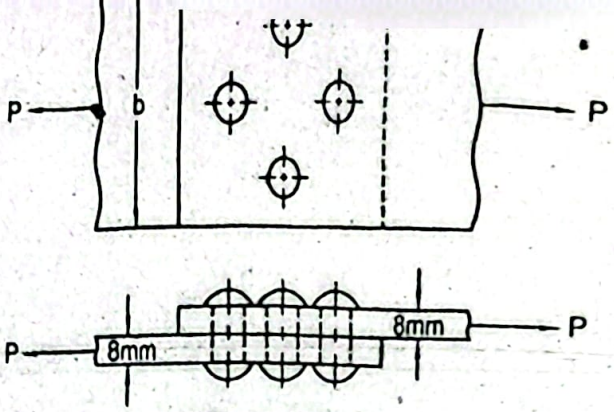

Figure P1.38

Given Data:

Load, $P = 50kN$

Allowable shear stress, $\tau_a = 75kN$

Allowable bearing stress, $\sigma_{c_a} = 125MPa$

Allowable tensile stress, $\sigma_{t_a} = 125MPa$

To Find:

- Rivet size, d
- Width of plate, b

Solution:

Shearing stress in the rivet, $\tau = \frac{P}{A}$

$$\text{or, } \tau = \frac{P}{4\left(\frac{\pi d^2}{4}\right)} \quad \left(\text{Since } A = 4\left(\frac{\pi d^2}{4}\right) \text{ for four rivets}\right)$$

$$\text{or, } \tau_a = 75 = \frac{50\times10^3}{\pi d^2}$$

$$\text{or, } d = 14.57mm$$

Considering bearing stress, $\sigma_c = \frac{P}{A}$

$$\text{or, } \sigma_c = \frac{P}{4\times(8\times d)} \quad \text{(Since projected area for each rivet} = 8\times$$

$$\text{or, } \sigma_{c_a} = 125 = \frac{50\times10^3}{32d}$$

$$\text{or, } d = 12.5mm$$

Therefore, the required rivet size, $d = 14.57mm$ ***Answer***

Tensile stress in the plate, $\sigma_t = \frac{P}{A} = \frac{P}{(b-2d)\times8}$

$$\text{or, } \sigma_{t_a} = 125 = \frac{50\times10^3}{(b-2\times14.57)\times8}$$

$$\text{or, } b = 79.14mm \text{ } \textbf{Answer}$$

Problem P1.39:

A homogeneous rod of constant cross-section is attached to the rigid walls as shown in Figure P1.39. It carries a load of $20kN$ as shown in the figure. Determine the reactions at both the ends of the rod.

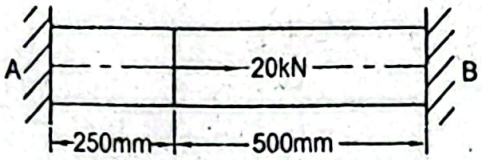

Figure P1.39

Given Data:

- Axial load, $P = 20kN$

To Find:

- Reactions at both ends

Solution:

Two sections of the homogeneous rod are shown in the following figure.

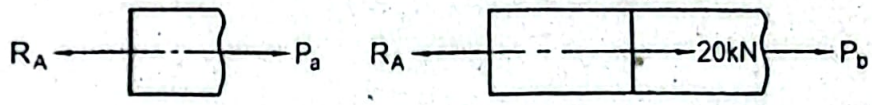

(a) (b)

In Figure (a), $+\rightarrow \Sigma F_x = 0$

$$\text{or, } -R_A + P_a = 0 \qquad (i)$$

where, P_a is the axial force in the section of length $250mm$ and R_A is the reaction at the end A. From Equation (i), $P_a = R_A$ (ii)

In Figure (b), $+\rightarrow \Sigma F_x = 0$

$$\text{or, } -R_A + 20 + P_b = 0 \qquad (iii)$$

where, P_b is the axial force in the section of length $500mm$.

From Equation (iii) we find,

$$P_b = R_A - 20 \qquad (iv)$$

Now, from Equations (ii) and (iv),

$$P_b = P_a - 20 \qquad (v)$$

Deflection in $250mm$ length,

$$\delta_a = \frac{P_a \times 0.250}{AE} \qquad (vi)$$

Deflection in $500mm$ length,

$$\delta_b = \frac{P_b \times 0.50}{AE} \qquad (vii)$$

Since the walls are rigid at the two ends the total deflection,

$$\delta = \delta_a + \delta_b = 0$$

$$\text{or, } \frac{P_a \times 0.25}{AE} + \frac{P_b \times \ldots}{AE} = 0$$

$$\text{or, } P_b = -\frac{0.25}{0.50} \times P_0 = -\frac{P_a}{2}$$

Substituting in Equation (v),

$$-\frac{P_a}{2} = P_a - 20$$

$$\text{or, } P_a = 13.33kN$$

Therefore, from Equation *(ii)*,

$$R_a = P_a = 13.33kN$$

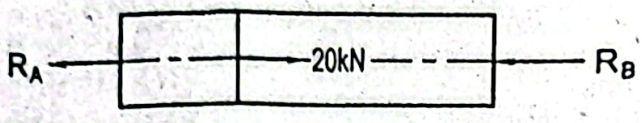

Now considering the entire member (Figure above),

$$+\rightarrow \Sigma F_x = 0$$

$$\text{or, } -R_A + 20 - R_B = 0$$

$$\text{or, } R_B = 20 - 13.33$$

$$\text{or, } R_B = 6.67kN$$

Therefore, the required reactions are,

$$R_A = 13.33kN \text{ Answer}$$

$$R_B = 6.67kN \text{ Answer}$$

Problem P1.40:

A composite bar made of aluminum alloy and steel is attached firmly between the walls as shown in Figure P1.40. If the axial load $P = 50kN$, determine the stres aluminum and steel portions of the composite bar. Consider $E_{st} = 200$ $E_{al} = 71GPa$, $A_{st} = 800mm^2$ and $A_{al} = 1200mm^2$.

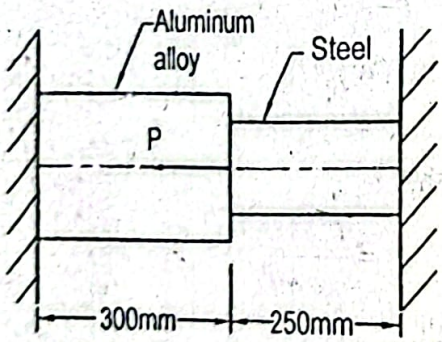

Figure P1.40

Given Data:

Axial load, $P = 50kN$

Modulus of elasticity of steel, $E_{st} = 200GPa$

Modulus of elasticity of aluminum alloy, $E_{al} = 71GPa$

Cross-s... $A_{st} = 800mm^2$

Cross-sectional area in aluminum alloy portion, $A_{al} = 1200mm^2$

To Find:

- Stresses in aluminum and steel portions, σ_{al} and σ_{st}

Solution:

Section in the aluminum portion as shown in the figure below,

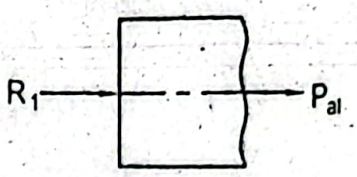

$$+\rightarrow \Sigma F_x = 0:$$

or, $R_1 + P_{al} = 0$

or, $P_{al} = -R_1$ *(i)*

Section in the steel portion as shown in the figure below,

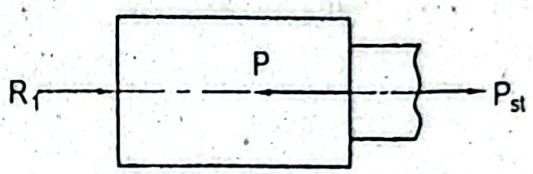

$$+\rightarrow \Sigma F_x = 0:$$

or, $R_1 - P + P_{st} = 0$

or, $P_{st} = P - R_1 = (50000 - R_1)$ *(ii)*

Total deflection is zero for the rigid walls, therefore,

$$\delta = \delta_{al} + \delta_{st} = 0$$

or, $\frac{P_{al} L_{al}}{A_{al} E_{al}} + \frac{P_{st} L_{st}}{A_{st} E_{st}} = 0$

or, $\frac{P_{al} \times 300}{1200 \times 71 \times 10^3} + \frac{P_{st} \times 250}{800 \times 200 \times 10^3} = 0$

or, $3.5211 \times 10^{-6} P_{al} + 1.5625 \times 10^{-6} P_{st} = 0$

or, $P_{st} = -2.254 P_{al}$ *(iii)*

From Equations *(i)* and *(ii)*,

$$P_{st} = P + P_{al}$$ *(iv)*

Substituting this value in Equation *(iii)*,

$$(P + P_{al}) = -2.254 P_{al}$$

or, $3.254 P_{al} = -P = -50 \times 10^3$

or, $P_{al} = -15365.70N$

Now substituting the values in Equation *(iv)*,

$$P_{st} = 50 \times 10^3 - 15365.70$$

$$\text{or, } P_{st} = 34634.30N$$

Therefore, stress in the aluminum portion,

$$\sigma_{al} = \frac{P_{al}}{A_{al}} = \frac{-15365.70}{1200} kPa = -12.81MPa$$

$$= 12.81\ MPa \text{ (Compression) } \textit{Answer}$$

And stress in the steel portion,

$$\sigma_{st} = \frac{P_{st}}{A_{st}} = \frac{34634.30}{800} kPa$$

$$= 43.29MPa \text{ (Tension) } \textit{Answer}$$

Problem P1.41:

A composite rod made of steel, brass and aluminum alloy is subjected to the axial loa P_1 and P_2 which are placed between the rigid walls as shown in Figure P1.41. Befo application of the load the rod was stress free. Determine the stresses in the aluminur brass and steel portions for $P_1 = 100kN$ and $P_2 = 75kN$. Cross-sectional areas in t steel, brass and aluminum alloy portions are respectively $800mm^2$, $1000mm$ and $1200mm^2$. Consider $E_{st} = 200GPa$, $E_{br} = 100GPa$ and $E_{al} = 71GPa$.

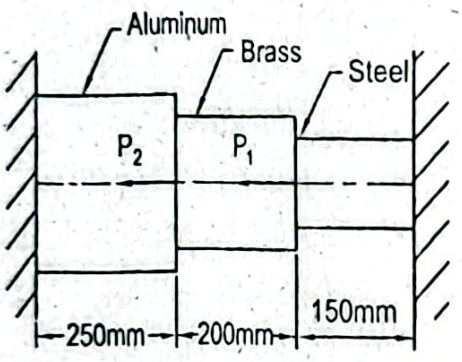

Figure P1.41

Given Data:

Axial load, $P_1 = 100kN$

Axial load, $P_2 = 75kN$

Cross-sectional area, $A_{al} = 1200mm^2$

Cross-sectional area, $A_{br} = 1000mm^2$

Cross-sectional area, $A_{st} = 800mm^2$

Length in aluminum portion, $L_{st} = 250mm$

Length in brass portion, $L_{br} = 200mm$

Length in steel portion, $L_{st} = 150mm$

To Find:

Stress in aluminum portion, σ_{al}

Stress in brass portion, σ_{br}

Stress in steel portion, σ_{st}

Solution:

The free body diagram of the entire composite rod is shown below.

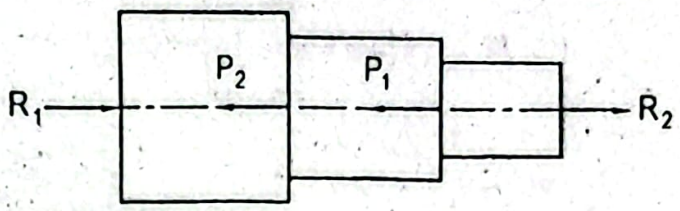

Here, R_1 and R_2 are the reactions.

In static equilibrium condition,

$$+\rightarrow \Sigma F_x = 0:$$

or, $R_1 - P_2 - P_1 + R_2 = 0$

or, $R_1 + R_2 = P_1 + P_2 = (100+75)\times 10^3 kN = 175\times 10^3 kN$ ...(i)

Since the walls are rigid, the net elongation is zero.

Therefore, $\delta_{al} + \delta_{br} + \delta_{st} = 0$

or, $\frac{P_{al}L_{al}}{A_{al}E_{al}} + \frac{P_{br}L_{br}}{A_{br}E_{br}} + \frac{P_{st}L_{st}}{A_{st}E_{st}} = 0$

or, $\frac{P_{al}\times 250}{1200\times 71\times 10^3} + \frac{P_{br}\times 200}{1000\times 100\times 10^3} + \frac{P_{st}\times 150}{800\times 200\times 10^3} = 0$

or, $2.934P_{al} + 2.0P_{br} + 0.9375P_{st} = 0$ ...(ii)

In the aluminum portion as shown in the figure below,

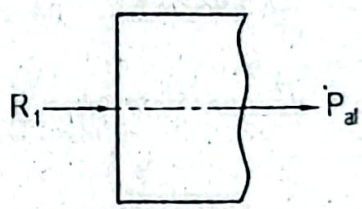

$$+\rightarrow \Sigma F_x = 0:$$

or, $R_1 + P_{al} = 0$

or, $P_{al} = -R_1$ ...(iii)

In the brass portion as shown in the figure below,

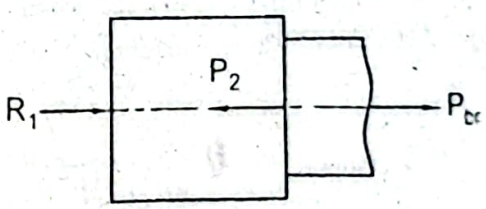

$$+\rightarrow \Sigma F_x = 0:$$

or, $R_1 - P_2 + P_{br} = 0$

or, $P_{br} = P_2 - R_1$

or, $P_{br} = (75\times 10^3 - R_1)$ ...(iv)

In the steel portion as shown in the figure below,

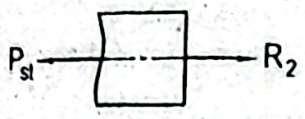

$$+\rightarrow \Sigma F_x = 0:$$

$$\text{or, } -P_{st} + R_2 = 0$$

Substituting the value of R_2 from Equation(i),

$$P_{st} = R_2 = \left(175\times10^3 - R_1\right).$$

Now from Equations(ii),(iii), (iv) and (v) we obtain,

$$2.934(-R_1) + 2\left(75\times10^3 - R_1\right) + 0.9375\left(175\times10^3 - R_1\right) = 0$$

$$\text{or, } R_1 = 53.49kN$$

Therefore, $R_2 = (175 - 53.49)kN = 121.51kN$

Now stress in the aluminum portion,

$$\sigma_{al} = \frac{P_{al}}{A_{al}} = \frac{-R_1}{A_{al}} = -\frac{53.49\times10^3}{1200} = -44.58MPa$$

That is, $\sigma_{al} = 44.58MPa$ (compression) *Answer*

Stress in the brass portion,

$$\sigma_{br} = \frac{P_{br}}{A_{br}} = \frac{75\times10^3 - R_1}{A_{br}} = \frac{75000 - 53490}{1000} = 21.51MPa$$

That is, $\sigma_{br} = 21.51MPa$ (Tension) *Answer*

Stress in the steel portion,

$$\sigma_{st} = \frac{P_{st}}{A_{st}} = \frac{175000 - R_1}{A_{st}} = \frac{175000 - 53490}{800} = 151.89MPa$$

That is, $\sigma_{st} = 151.89MPa$ (Tension) *Answer*

Problem P1.42:

A composite rod made of copper and steel is subjected to an axial load $P = 200kN$ as shown in Figure P1.42. Before application of the load there was a gap of $\delta = 0.05mm$ between the end of the rod and the plane rigid wall. Determine the stresses in the copper and steel portions when the load is applied. Cross-sectional areas of the copper and steel portions are respectively $15000mm^2$ and $5000mm^2$. Consider $E_{st} = 200GPa$ and $E_{cu} = 120GPa$.

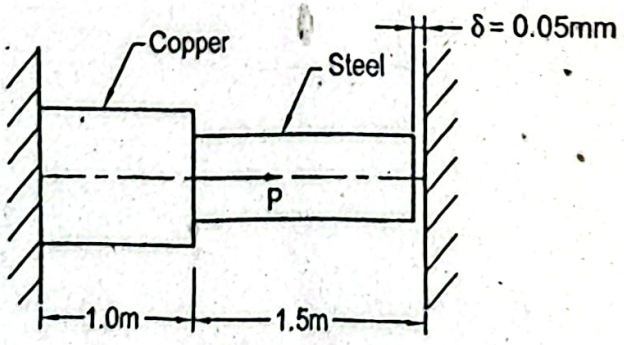

Figure P1.42

Axial load, P = [illegible]

Cross-sectional area in copper portion, $A_{cu} = 15000mm^2$

Cross-sectional area in steel portion, $A_{st} = 5000mm^2$

Modulus of elasticity of copper, $E_{cu} = 120GPa$

Modulus of elasticity of steel, $E_{st} = 200GPa$

Gap before application of load, $\delta = 0.05mm$

To Find:

. Stress in copper portion, σ_{cu}

. Stress in steel portion, σ_{st}

Solution:

Various deflections are shown in the figure below.

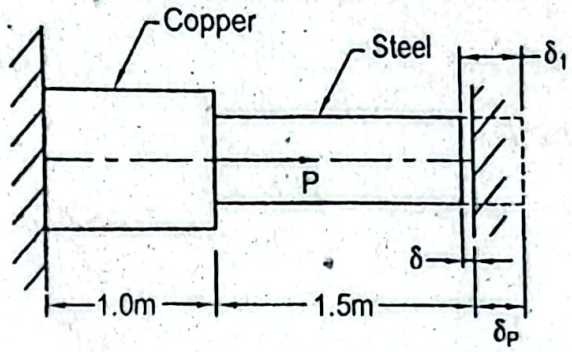

Free deflection of the rod due to application of the load P,

$$\delta_1 = \frac{PL_{cu}}{A_{cu}E_{cu}} = \frac{200\times10^3\times1.0\times10^3}{15000\times120\times10^3}mm = 0.111mm$$

Therefore, the deformation due to presence of the rigid walls,

$$\delta_p = \delta_1 - \delta = (0.111 - 0.05)mm = 0.061mm$$

For this deformation a reaction R_2 will be developed by the rigid wall at the right side. This reaction will make total deformation of δ_p in the composite rod; as a result we find,

$$0.061 = \frac{R_2\times10^3\times1.0\times10^3}{15000\times120\times10^3} + \frac{R_2\times10^3\times1.50\times10^3}{5000\times200\times10^3}$$

or, $R_2 = 29.68kN$

The free body diagram of the entire composite rod is shown below.

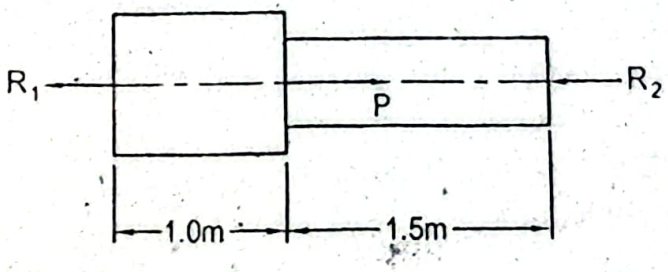

In static equilibrium condition,

$$+\rightarrow \Sigma F_x = 0: \; -R_1 + P - R_2 = 0$$

or, $R_1 = P - R_2 = (200 - 29.68)kN = 170.32kN$

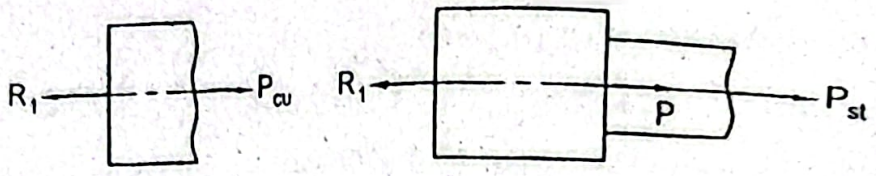

Section in copper portion Section in steel portion

In the copper portion as shown in the above figure,

$$+\rightarrow \Sigma F_x = 0: \; -R_1 + P_{cu} = 0$$

$$\text{or, } P_{cu} = R_1 = 170.32kN$$

In the steel portion as shown in the above figure,

$$+\rightarrow \Sigma F_x = 0: \; -R_1 + P + P_{st} = 0$$

$$\text{or, } P_{st} = R_1 - P = (170.32 - 200)kN = -29.68kN$$

Therefore, the stress in the copper portion,

$$\sigma_{cu} = \frac{P_{cu}}{A_{cu}} = \frac{170.32 \times 10^3}{15000} = 11.35MPa \text{ (Tension) } \textbf{\textit{Answer}}$$

And stress in the steel portion,

$$\sigma_{st} = \frac{P_{st}}{A_{st}} = \frac{29.68 \times 10^3}{5000} = 5.94MPa \text{ (Compression) } \textbf{\textit{Answer}}$$

Problem P1.43:

A homogeneous rigid bar of uniform cross-section is supported horizontally by two st wires at the ends of the bar and by one brass wire at the mid point of the bar as shown igure P1.43. The mass of the bar is *1000kg* and diameter of each wire is *6m* l ermine the stresses developed in the steel and brass wires for the same initial length th el and brass wires. Consider $E_{st} = 200GPa$ and $E_{br} = 100GPa$.

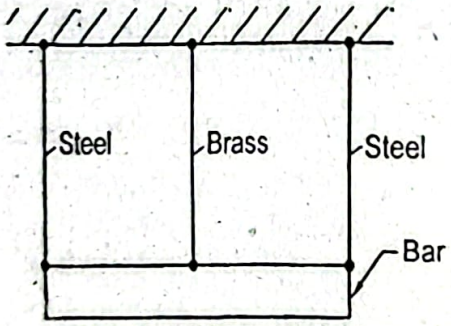

Figure P1.43

Given Data:

Mass of rigid bar, $m = 1000kg$

Diameter of each wire, $d = 6mm$

Modulus of elasticity of steel, $E_{st} = 200GPa$

Modulus of elasticity of brass, $E_{br} = 100GPa$

To Find:

- Stresses developed in steel and brass wires, σ_{st} and σ_{br}

According to the problem elongation in both the steel and brass wires is same, that is,

$$\delta_{st} = \delta_{br}$$

$$\text{or, } \frac{P_{st} L_{st}}{A_{st} E_{st}} = \frac{P_{br} L_{br}}{A_{br} E_{br}}$$

But we have, $A_{st} = A_{br}$ for the same diameter

and, $L_{st} = L_{br}$ for the same initial length

Therefore, $$\frac{P_{st}}{E_{st}} = \frac{P_{br}}{E_{br}}$$

$$\text{or, } \frac{P_{st}}{P_{br}} = \frac{E_{st}}{E_{br}} = \frac{200\times10^3}{100\times10^3} = 2$$

$$\text{or, } P_{st} = 2P_{br}$$

We have from the force balance in static equilibrium,

$$2P_{st} + P_{br} = mg$$

$$\text{or, } 2\times2P_{br} + P_{br} = 1000\times9.81$$

$$\text{or, } 5P_{br} = 9810$$

$$\text{or, } P_{br} = 1962N$$

Therefore, $$P_{st} = 2P_{br}$$

$$= 3924N$$

Stress in the steel wire, $$\sigma_{st} = \frac{P_{st}}{A_{st}} = \frac{3924.0\times4}{\pi\times6^2} = 138.78MPa$$ ***Answer***

Stress in the brass wire, $$\sigma_{br} = \frac{P_{br}}{A_{br}} = \frac{1962.0}{\pi\times6^2} = 69.39MPa$$ ***Answer***

Problem P1.44:

A rigid homogeneous member of weight *150kN* is suspended horizontally by the three rods as shown in Figure P1.44. Determine (a) the length of the aluminum alloy rod so that the load on each steel rod is twice the load on the aluminum alloy rod and (b) the length of the aluminum alloy rod so that the stress in the steel rod is twice the stress in the aluminum alloy rod.

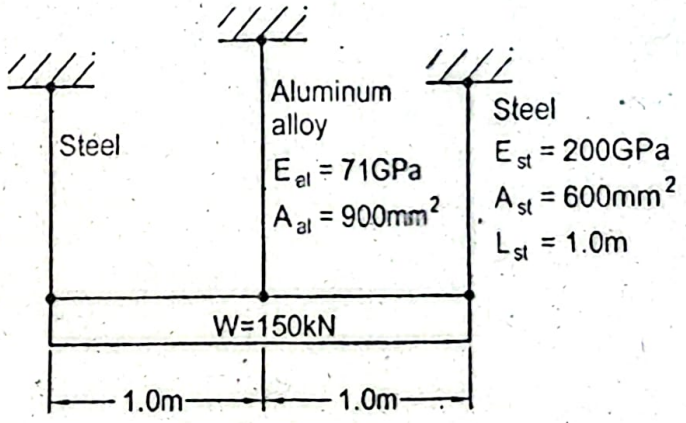

Figure P1.44

Given Data:

Weight of member, $W = 150kN$

Modulus of elasticity of aluminum alloy, $E_{al} = 71GPa$

Modulus of elasticity of steel, $E_{st} = 200GPa$

Length of steel rod, $L_{st} = 1.0m$

Cross-sectional area of aluminum alloy rod, $A_{al} = 900mm^2$

Cross-sectional area of steel rod, $A_{st} = 600mm^2$

To Find:

- Length of aluminum alloy rod, L_{al} for $P_{st} = 2P_{al}$
- Length of aluminum alloy rod, L_{al} for $\sigma_{st} = 2\sigma_{al}$

Solution:

Since the three rods are spaced at equal distance and the outer steel rods have th dimensions, the deflection in each rod will be equal.

(a) We have, $P_{st} = 2P_{al}$

In static equilibrium condition we find from the force balance,

$$2P_{st} + P_{al} = 150$$

$$\text{or, } 2(2P_{al}) + P_{al} = 150$$

$$\text{or, } 5P_{al} = 150$$

$$\text{or, } P_{al} = 30kN$$

Therefore, $P_{st} = 2 \times 30kN = 60kN$

Deflection in the steel rod,

$$\delta_{st} = \frac{P_{st} L_{st}}{A_{st} + E_{st}} = \frac{60 \times 1.0}{600 \times 200 \times 10^3}$$

Deflection in the aluminum alloy rod,

$$\delta_{al} = \frac{P_{al} L_{al}}{A_{al} E_{al}} = \frac{30 \times L_{al}}{900 \times 71 \times 10^3}$$

Therefore, $$\frac{60 \times 1.0}{600 \times 200 \times 10^3} = \frac{30 \times L_{al}}{900 \times 71 \times 10^3}$$

$$\text{or, } L_{al} = 1.065m \text{ Answer}$$

(b) Deflection in the steel rod,

$$\delta_{st} = \frac{\sigma_{st} L_{st}}{E_{st}}$$

Deflection in the aluminum alloy rod,

$$\delta_{al} = \frac{\sigma_{al} L_{al}}{E_{al}}$$

We have, $\sigma_{st} = 2\sigma_{al}$

Therefore, $\frac{E_{st}}{L_{st}} = 2 \times \frac{E_{al}}{L_{al}}$

or, $\frac{E_{st}}{L_{st}} = \frac{2E_{al}}{L_{al}}$ (Since $\delta_{st} = \delta_{al}$)

or, $\frac{200 \times 10^3}{1.0} = \frac{2 \times 71 \times 10^3}{L_{al}}$

or, $L_{al} = 0.71m$ **Answer**

Problem P1.45:

A bronze rod of cross-sectional area $2000mm^2$ and length of $250.04mm$ is placed centrally inside a steel tube of length $250mm$ and same cross-sectional area $2000mm^2$ as shown in Figure P1.45. What axial force P will be applied in order to make equal stress in the bronze rod and the steel tube? Consider $E_{st} = 200GPa$ and $E_{br} = 80GPa$.

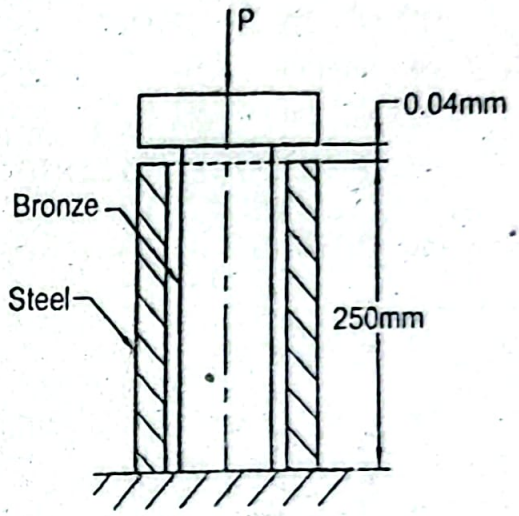

Figure P1.45

Given Data:

Length of bronze rod, $L_{br} = 250.04mm$

Length of steel rod, $L_{st} = 250mm$

Cross-sectional area of bronze rod, $A_{br} = 2000mm^2$

Cross-sectional area of steel tube, $A_{st} = 2000mm^2$

Modulus of elasticity of steel, $E_{st} = 200GPa$

Modulus of elasticity of bronze, $E_{br} = 80GPa$

To Find:

- Axial load, P

Solution:

Various deflections are shown in the following figure.

Deflection in the steel tube, $\delta_{st} = \frac{P_{st} L_{st}}{A_{st} E_{st}}$

$$= \frac{P_{st} \times 250}{2000 \times 200 \times 10^3} = 6.25 \times 10^{-7} P_{st}$$

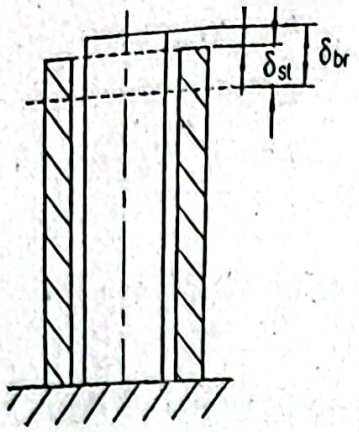

Deflection in the bronze rod, $\delta_{br} = \dfrac{P_{br} L_{br}}{A_{br} E_{br}}$

$$= \frac{P_{br} \times 250.04}{2000 \times 80 \times 10^3} = 1.563 \times 10^{-6} P_{br}$$

Now according to the given condition,

$$\delta_{br} = \delta_{st} + 0.04$$

$$\text{or, } 1.563 \times 10^{-6} P_{br} = 6.25 \times 10^{-7} P_{st} + 0.04$$

Now stress in the bronze rod, $\sigma_{br} = \dfrac{P_{br}}{A_{br}}$

Stress in the steel tube, $\sigma_{st} = \dfrac{P_{st}}{A_{st}}$

But we have, $\sigma_{br} = \sigma_{st}$

$$\text{or, } \frac{P_{br}}{A_{br}} = \frac{P_{st}}{A_{st}}$$

We also have, $A_{br} = A_{st} = A = 2000mm^2$

Therefore, $P_{br} = P_{st}$

From the force balance, $P = P_{br} + P_{st}$

Therefore, $P_{br} = P_{st} = \dfrac{P}{2}$

Substituting in Equation (i), $1.563 \times 10^{-6} \times \dfrac{P}{2} = 6.25 \times 10^{-7} \times \dfrac{P}{2} + 0.04$

$$\text{or, } P = 85.29kN \text{ Answer}$$

Problem P1.46:

A rigid bar of negligible mass is subjected to a vertical load $P = 100kN$ at its one end shown in Figure P1.46. The bar is pinned at the point O and attached to a steel rod and aluminum alloy rod. The rods were stress free before application of the load. Cross-sectional areas of steel and aluminum alloy rods are respectively $800mm^2$ and $400mm^2$. Determine the stresses in the steel and aluminum alloy rods. Consider $E_{st} = 200GPa$ and $E_{al} = 71GPa$.

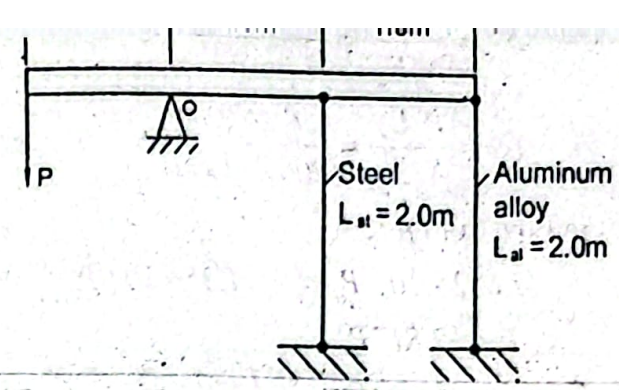

Figure P1.46

Given Data:

Vertical load, $P = 100kN$

Cross-sectional area of steel rod, $A_{st} = 800mm^2$

Cross-sectional area of aluminum alloy rod, $A_{al} = 400mm^2$

Length of steel rod, $L_{st} = 2.0m$

Length of aluminum alloy rod, $L_{al} = 2.0m$

Modulus of elasticity of steel, $E_{st} = 200GPa$

Modulus of elasticity of aluminum alloy, $E_{al} = 71GPa$

To Find:

- Stress in steel rod, σ_{st}
- Stress in aluminum alloy rod, σ_{al}

Solution:

The following figure shows the forces and deflections after application of the load.

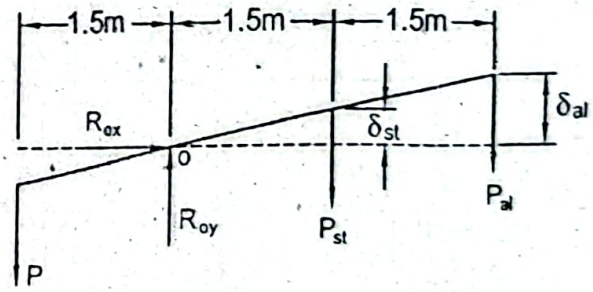

In static equilibrium condition,

$$+\circlearrowleft \sum M_O = 0:$$

or, $P \times 1.5 - P_{st} \times 1.5 - P_{al} \times 3.0 = 0$

or, $1.5P = 1.5P_{st} + 3P_{al}$

or, $P = P_{st} + 2P_{al}$

or, $P_{st} + 2P_{al} = 100 \times 10^3$ *(i)*

From similar triangles, $\frac{\delta_{al}}{\delta_{st}} = \frac{3}{1.5}$

or, $\delta_{al} = 2\delta_{st}$ *(ii)*

$$\delta_{st} = \frac{P_{st} L_{st}}{A_{st} E_{st}} = \frac{P_{st} \times 2000}{800 \times 200 \times 10^3} = 1.25 \times 10^{-5} P_{st}$$

$$\delta_{al} = \frac{P_{al} L_{al}}{A_{al} E_{al}} = \frac{P_{al} \times 2000}{400 \times 71 \times 10^3} = 7.04 \times 10^{-5} P_{al}$$

Substituting these values in Equation(*ii*),

$$7.042 \times 10^{-5} P_{al} = 2 \times 1.25 \times 10^{-5} P_{st}$$

or, $P_{st} = 2.817 P_{al}$

Substituting this value in Equation(*i*),

$$2.817 P_{al} + 2 P_{al} = 100 \times 10^3$$

or, $P_{al} = 20759.81N$

Therefore, $P_{st} = 58480.38N$

Stress in the aluminum alloy rod,

$$\sigma_{al} = \frac{P_{al}}{A_{al}} = \frac{20759.81}{400} MPa = 51.90MPa \quad \textbf{Answer}$$

Stress in the steel rod, $\sigma_{st} = \frac{P_{st}}{A_{st}} = \frac{58480.38}{800} MPa = 73.10MPa$ **Answer**

Problem P1.47:

A rigid beam is supported horizontally from three steel rods which are pla symmetrically as shown in Figure P1.47. Cross-sectional area of each rod is same. Le of the middle rod is *0.5mm* shorter than the outer two rods. Determine the stress in rod when the middle rod is attached to the beam. Consider $E_{st} = 200GPa$. Neglec weight of the rigid bar.

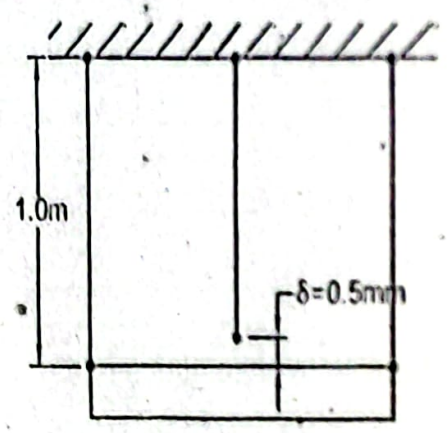

Figure P1.47

Given Data:

Gap between middle rod and beam, $\delta = 0.5mm$ (Before attachment)

Modulus of elasticity of steel, $E_{st} = 200GPa$

Length of rod, $L = 1.0m$

To Find:

- Stress in outer rod, σ_o
- Stress in middle rod, σ_m

Solution:

When the middle rod is attached to the beam, it is elongated by δ_m and the outer rods are shortened by δ_0. As a result we find a relation,

$$\delta_m = \delta - \delta_0$$

$$\text{or, } \delta = \delta_m + \delta_0$$

$$\text{or, } 0.5 = \delta_m + \delta_0 \qquad (i)$$

But we have, $\delta_m = \dfrac{\sigma_m L_m}{E_{st}}$

and $\delta_0 = \dfrac{\sigma_0 L_0}{E_{st}}$

Substituting these values in Equation (i),

$$0.5 = \frac{\sigma_m L_m}{E_{st}} + \frac{\sigma_0 L_0}{E_{st}}$$

$$\text{or, } 0.5 = \frac{\sigma_m \times 1.0\times 10^3}{200\times 10^3} + \frac{\sigma_0 \times 1.0\times 10^3}{200\times 10^3}$$

$$\text{or, } \sigma_m + \sigma_0 = 100 \qquad (ii)$$

The following figure shows the forces in the rigid beam after attachment of the middle rod.

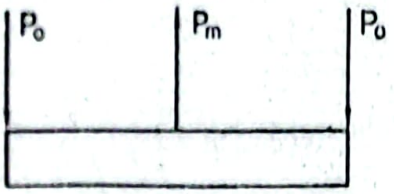

From the force balance, $P_m - 2P_0 = 0$

$$\text{or, } P_m = 2P_0$$

$$\text{or, } \frac{P_m}{A} = \frac{2P_0}{A}$$

$$\text{or, } \sigma_m = 2\sigma_0 \qquad (iii)$$

Now from Equations (ii) and (iii),

$$2\sigma_0 + \sigma_0 = 100$$

$$\text{or, } \sigma_0 = 33.33MPa \text{ (Compression) } \textit{Answer}$$

Therefore, $\sigma_m = 66.67MPa$ (Tension) *Answer*

Problem P1.48:

A rigid bar AB is pinned at O and attached with a steel rod and a bronze rod as shown in Figure P1.48. Initially there was a gap δ between the bottom end of the steel rod and the pin support and the bar AB was horizontal. Determine the stresses in the steel and bronze rods when the bottom end of the steel rod is attached to the pin support. Neglect the weight of the bar.

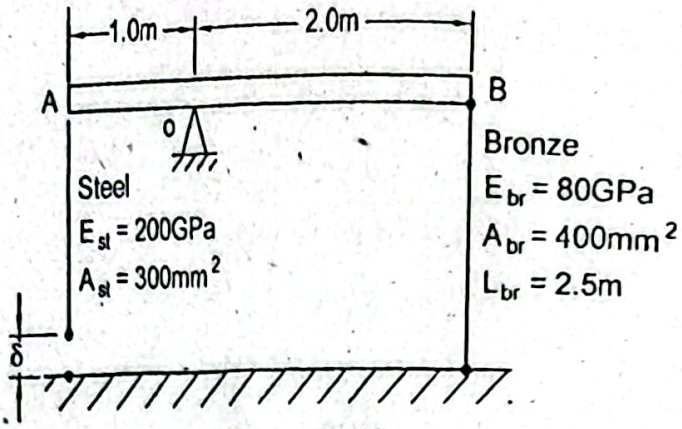

Figure P1.48

Given Data:

Initial gap, $\delta = 4mm$

Modulus of elasticity of steel, $E_{st} = 200GPa$

Modulus of elasticity of bronze, $E_{br} = 80GPa$

Cross-sectional area of steel rod, $A_{st} = 300mm^2$

Cross-sectional area of bronze rod, $A_{br} = 400mm^2$

Length of bronze rod, $L_{br} = 2.5m$

To Find:

- Stress in steel rod, σ_{st}
- Stress in bronze rod, σ_{br}

Solution:

The following figure shows the forces and deflections after attachment of the steel ro

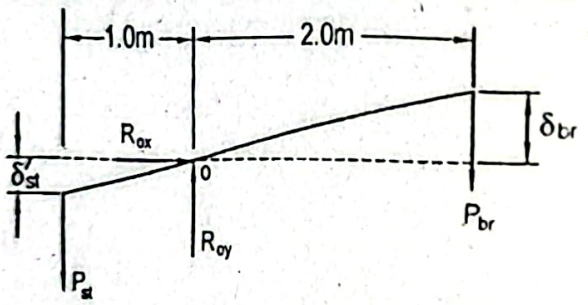

In static equilibrium condition,

$$+\circlearrowleft \sum M_O = 0:$$

$$\text{or, } P_{st} \times 1.0 - P_{br} \times 2.0 = 0$$

$$\text{or, } P_{st} = 2P_{br}$$

From similar triangles we have,

$$\frac{\delta'_{st}}{1.0} = \frac{\delta_{br}}{2.0}$$

$$\delta_{br} = 2.0\delta'_{st}$$

Elongation in the bronze rod, $\delta_{br} = \frac{P_{br}L_{br}}{A_{br}E_{br}} = \frac{P_{br} \times 2500}{400 \times 80 \times 10^3} = 7.8125 \times 10^{-5} P_{br}$

And elongation in the steel rod,

$$\frac{A_{st}E_{st}}{} \quad 300\times200\times10^{3} = 4.16\times10^{-5}\,P_{st}$$

But we have, $\delta_{st} = (4-\delta'_{st})$

or, $(4-\delta'_{st}) = 4.16\times10^{-5}\,P_{st}$ *(iii)*

From Equation *(ii)*, $\delta'_{st} = 0.5\delta_{br}$

$= 0.5\times7.8125\times10^{-5}\,P_{br}$

$= 3.906\times10^{-5}\,P_{br}$

Substituting this value in Equation *(iii)*,

$$(4-3.906\times10^{-5}\,P_{br}) = 4.16\times10^{-5}\,P_{st}$$

Now from Equation *(i)* substituting the value of P_{st},

$$(4-3.906\times10^{-5}\,P_{br}) = 4.16\times10^{-5}\times2P_{br}$$

or, $P_{br} = 32.72kN$

Therefore, $P_{st} = 2P_{br} = 2\times32.72kN = 65.43kN$

Therefore, the stress in the bronze rod,

$$\sigma_{br} = \frac{P_{br}}{A_{br}} = \frac{32.72\times10^{3}}{400} = 81.8MPa \text{ Answer}$$

and the stress in the steel rod, $\sigma_{st} = \frac{P_{st}}{A_{st}} = \frac{65.43\times10^{3}}{300} = 218.1MPa$ **Answer**

Problem P1.49:

A rigid bar is pinned at O and attached to two vertical rods as shown in Figure P1.49. Determine the stress in each rod if the load $P = 100kN$. The bar was initially horizontal and the rods were stress free. Neglect the weight of the rigid bar.

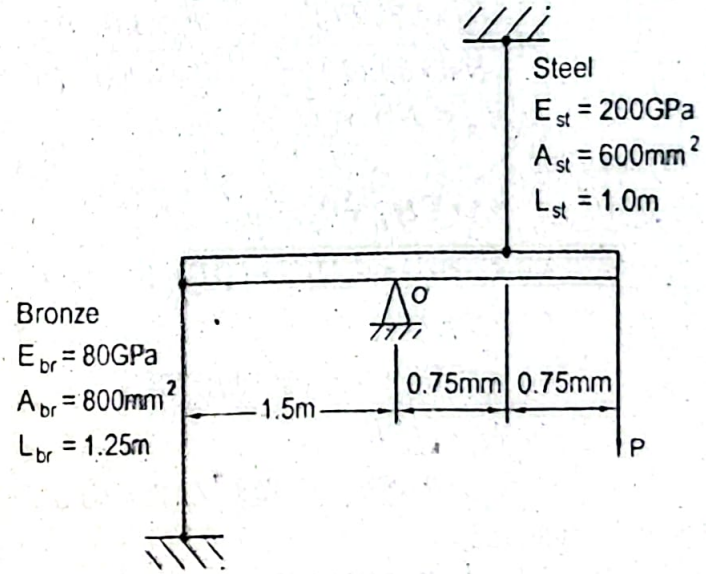

Figure P1.49

Given Data:

Vertical load, $P = 100kN$

Cross-sectional area of steel rod, $A_{st} = 600mm^2$

Cross-sectional area of bronze rod, $A_{br} = 800mm^2$

Modulus of elasticity of steel, $E_{st} = 200GPa$

Modulus of elasticity of bronze, $E_{br} = 80GPa$

Length of steel rod, $L_{st} = 1.0m$

Length of bronze rod, $L_{br} = 1.25m$

To Find:

Stress in steel rod, σ_{st}

Stress in bronze rod, σ_{br}

Solution:

The following figure shows the forces and deflections after application of the load.

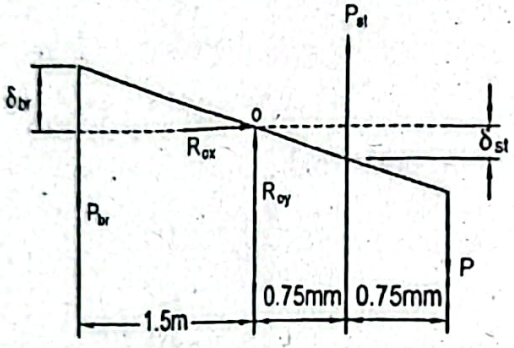

From similar triangles, $\frac{\delta_{st}}{\delta_{br}} = \frac{0.75}{1.5}$

or, $\delta_{br} = 2\delta_{st}$

or, $\frac{P_{br}L_{br}}{A_{br}E_{br}} = 2 \times \frac{P_{st}L_{st}}{A_{st}E_{st}}$

or, $\frac{P_{br} \times 1.25 \times 10^3}{800 \times 80 \times 10^3} = 2 \times \frac{P_{st} \times 1.0 \times 10^3}{600 \times 200 \times 10^3}$

or, $P_{br} = 0.853P_{st}$

In static equilibrium condition,

$+\circlearrowleft \sum M_O = 0:$

or, $P_{br} \times 1.5 + 0.75P_{st} - 1.5P = 0$

or, $P_{br} + 0.5P_{st} = P$

or, $0.853P_{st} + 0.5P_{st} = 100 \times 10^3$

or, $P_{st} = 73.91kN$

Therefore, $P_{br} = 0.853P_{st} = 0.853 \times 73.91 = 63.05kN$

Therefore, the stress in the steel rod,

$$\sigma_{st} = \frac{P_{st}}{A_{st}} = \frac{73.91 \times 10^3}{600} = 123.18MPa \text{ Answer}$$

and the stress in the bronze rod, $\sigma_{br} = \frac{P_{br}}{A_{br}} = \frac{63.05 \times 10^3}{800} = 78.81MPa$ **Answer**

Problem P1.50:

A rigid body of weight W is supported by three rods spaced symmetrically as shown in Figure P1.50. Each steel rod has cross-sectional area of $800mm^2$ and brass rod has cross-sectional area of $1000mm^2$. Determine the maximum weight that can be supported, if the allowable stresses for steel and brass are respectively $120MPa$ and 75MPa. Consider $E_{st} = 200GPa$ and $E_{br} = 100GPa$.

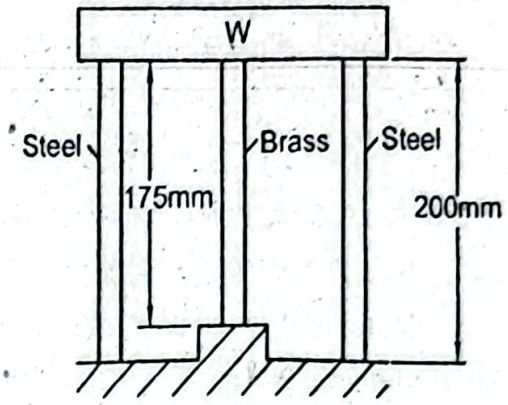

Figure P1.50

Given Data:

Cross-sectional area of steel rod, $A_{st} = 800mm^2$

Cross-sectional area of brass rod, $A_{br} = 1000mm^2$

Allowable stress for steel, $\sigma_{st_a} = 120MPa$

Allowable stress for brass, $\sigma_{br_a} = 75MPd$

Modulus of elasticity of steel, $E_{st} = 200GPa$

Modulus of elasticity of brass, $E_{br} = 100GPa$

Length of each steel rod, $L_{st} = 200mm$

Length of brass rod, $L_{br} = 175mm$

To Find:

- Maximum weight, W

Solution:

Deformation in the steel rod, $\delta_{st} = \dfrac{P_{st} L_{st}}{A_{st} E_{st}} = \dfrac{P_{st} \times 200}{800 \times 200 \times 10^3} = 1.25 \times 10^{-6} P_{st}$

Deformation in the brass rod, $\delta_{br} = \dfrac{P_{br} L_{br}}{A_{br} E_{br}} = \dfrac{P_{br} \times 175}{1000 \times 100 \times 10^3} = 1.75 \times 10^{-6} P_{br}$

Since deformation is equal in the steel and brass rods,

$$\delta_{st} = \delta_{br}$$

$$\text{or, } 1.25 \times 10^{-6} P_{st} = 1.75 \times 10^{-6} P_{br}$$

$$\text{or, } P_{st} = 1.4 P_{br} \qquad (i)$$

From the force balance, $W = 2P_{st} + P_{br}$ $\qquad (ii)$

From Equations (i) and (ii),

$$W = 2\times[illegible]$$

$$\text{and, } W = 2P_{st} + \frac{P_{st}}{1.4} = 2.714P_{st}$$

Stress in the steel rod, $\sigma_{st} = \frac{P_{st}}{A_{st}}$

$$\text{or, } P_{st} = \sigma_{st}A_{st} = \sigma_{st_a}A_{st} = 120\times800 = 96\,kN$$

Stress in the brass rod, $\sigma_{br} = \frac{P_{br}}{A_{br}}$

$$\text{or, } P_{br} = \sigma_{br}A_{br} = \sigma_{br_a}A_{br} = 75\times1000 = 75\,kN$$

Now, weight based on P_{st}, $W = 2.714\times96 = 260.5kN$

and weight based on P_{br}, $W = 3.8P_{br} = 3.8\times75 = 285kN$

Therefore, the required maximum weight,

$W = 260.5kN$ *Answer*

Problem P1.51:

Two steel bars each *400mm* long and a bronze bar *399.8mm* long supp homogeneous rigid body of uniform cross-section and weight $W = 500kN$ as sho Figure P1.51. The bars are placed symmetrically as shown in the same figure. (sectional areas of the steel and bronze bars are respectively $1500mm^2$ and 2500 Determine the stress in each bar. Consider $E_{st} = 200GPa$ and $E_{br} = 80GPa$.

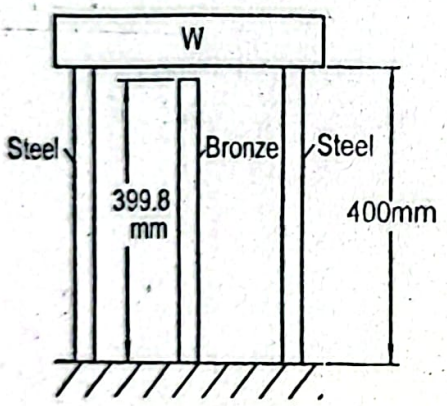

Figure P1.51

Given Data:

Length of steel bar, $L_{st} = 400mm$

Length of bronze bar, $L_{br} = 399.8mm$

Weight, $W = 500kN$

Cross-sectional area of steel bar, $A_{st} = 1500mm^2$

Cross-sectional area of bronze bar, $A_{br} = 2500mm^2$

Modulus of elasticity of steel, $E_{st} = 200GPa$

Modulus of elasticity of bronze, $E_{br} = 80GPa$

To Find:

- Stresses in steel and bronze bars, σ_{st} and σ_{br}

From the force balance in static equilibrium condition,

$$W = 2P_{st} + P_{br}$$

$$\text{or, } 2P_{st} + P_{br} = 500\times10^{3} \qquad (i)$$

A relation of deflections is obtained as,

$$\delta_{st} = \delta_{br} + (400 - 399.85) \qquad (ii)$$

Now,
$$\delta_{st} = \frac{P_{st}L_{st}}{A_{st}E_{st}} = \frac{P_{st}\times400}{1500\times200\times10^{3}} = 1.333\times10^{-6}P_{st}$$

$$\text{and, } \delta_{br} = \frac{P_{br}L_{br}}{A_{br}E_{br}} = \frac{P_{br}\times399.85}{2500\times80\times10^{3}} = 1.9993\times10^{-6}P_{br}$$

Substituting these values in Equation (ii),

$$1.333\times10^{-6}P_{st} = 1.9993\times10^{-6}P_{br} + 0.15$$

$$\text{or, } P_{st} = 1.5P_{br} + 112528.1$$

Substituting this value in Equation (i),

$$2(1.5P_{br} + 112528.1) + P_{br} = 500000$$

$$\text{or, } P_{br} = 68735.95N$$

Therefore,
$$P_{st} = 215632.03N$$

Stress in the bronze bar, $\sigma_{br} = \frac{68735.95}{2500} = 27.49MPa$ ***Answer***

And stress in the steel bar, $\sigma_{st} = \frac{215632.03}{1500} = 143.75MPa$ ***Answer***

Problem P1.52:

A load P is suspended by three circular rods as shown in Figure P1.52. The middle rod is made of steel and the other two rods are made of brass. If the allowable stresses in steel and brass are respectively $120MPa$ and $70MPa$ and the diameter of each rod is $20mm$. find the maximum load that can be suspended. Take $E_{st} = 200GPa$ and $E_{br} = 100GPa$.

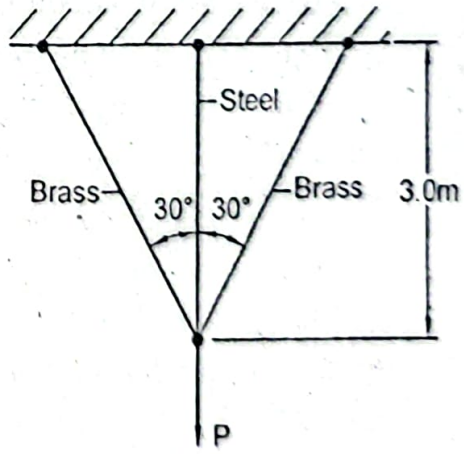

Figure P1.52

Given Data:

Diameter of steel rod, $d_{st} = 20mm$

Diameter of brass rod, $d_{br} = 20mm$

Length of steel rod, $L_{st} = 3m$

Allowable stress in steel, $\sigma_{st_a} = 120MPa$

Allowable stress in brass, $\sigma_{br_a} = 70MPa$

Modulus of elasticity of steel, $E_{st} = 200GPa$

Modulus of elasticity of brass, $E_{br} = 100GPa$

To Find:

- Maximum load, P_{max}

Solution:

The following figure shows the deflections of the rods after application of the load

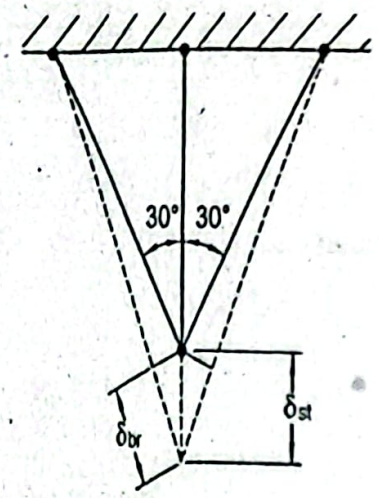

Length of brass rod before application of the load,

$$L_{br} = \frac{L_{st}}{\cos 30^0} = 3.464m$$

A relation of deflections is obtained as,

$$\delta_{st} \cos 30^0 = \delta_{br}$$

Elongation in the steel rod, $\delta_{st} = \frac{P_{st} L_{st}}{A_{st} E_{st}} = \frac{P_{st} \times 3 \times 10^3 \times 4}{\pi \times 20^2 \times 200 \times 10^3} = 4.775 \times 10^{-5} P_{st}$

Elongation in the brass rod, $\delta_{br} = \frac{P_{br} L_{br}}{A_{br} E_{br}} = \frac{P_{br} \times 3.464 \times 10^3 \times 4}{\pi \times 20^2 \times 100 \times 10^3} = 1.1206 \times 10^{-4} P_{br}$

Substituting these values in Equation (i),

$$4.775 \times 10^{-5} P_{st} \cos 30^0 = 1.102 \times 10^{-4} P_{br}$$

$$\text{or, } P_{st} = 2.665 P_{br}$$

$$\text{or, } P_{br} = 0.375 P_{st}$$

In static equilibrium condition as shown in the following figure,

$$+\uparrow \sum F_y = 0$$

$$\text{i.e. } P_{st} + 2P_{br} \cos 30^0 - P = 0$$

$$\text{or, } P = P_{st} + 1.732 P_{br}$$

or, $P = 2.665P_{br} + 1.732P_{br} = 4.397P_{br}$

or, $P = P_{st} + 1.732 \times 0.375P_{st} = 1.6495P_{st}$

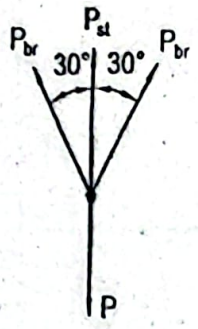

Now, load based on P_{st}, $P = 1.6495 \times \sigma_{st_a} A_{st}$

$$= 1.6495 \times 120 \times \frac{\pi}{4} \times 20^2$$

$$= 62.19kN$$

and based on P_{br}, $P = 4.397 \times \sigma_{br_a} A_{br}$

$$= 4.397 \times 70 \times \frac{\pi}{4} \times 20^2$$

$$= 96.70kN$$

Therefore, the maximum load that can be suspended,

$P_{max} = 62.19kN$ *Answer*

Problem P1.53:

A rigid bar AB of negligible weight is suspended from two steel wires, each of *6mm* diameter as shown in Figure P1.53. The bar supports a load $P = 5kN$ at its end. Determine the stress in each wire. Consider $E_{st} = 200GPa$.

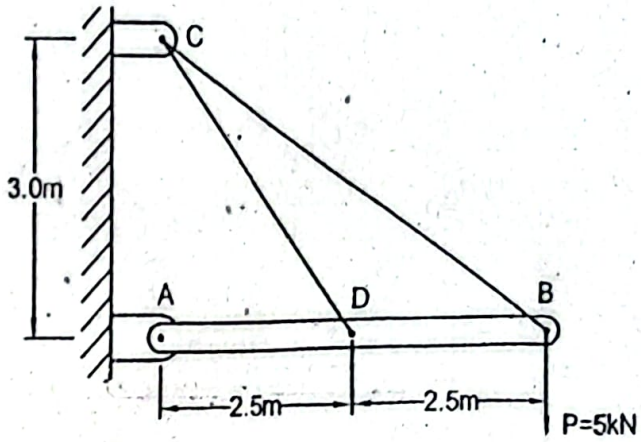

Figure P1.53

Given Data:

Load applied, $P = 5kN$

Diameter of steel wire, $d = 6mm$

Modulus of elasticity, $E_{st} = 200GPa$

To Find:

- Stress in each wire, σ_{BC} and σ_{CD}

Solution:

The following figure shows the deflections of the ... of the load

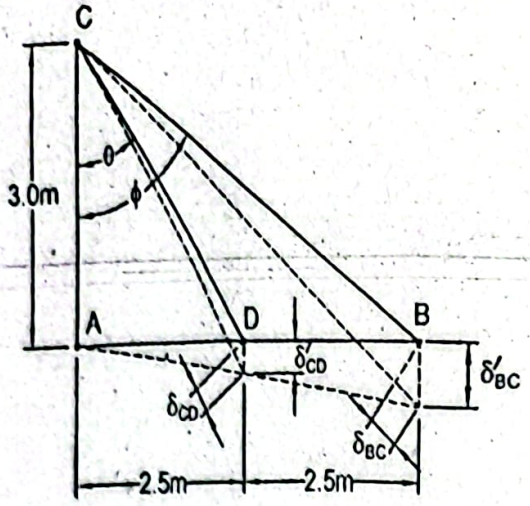

Angle θ and ϕ are given by,

$$\theta = \tan^{-1}\left(\frac{2.5}{3.0}\right) = 39.81^0$$

$$\phi = \tan^{-1}\left(\frac{5.0}{3.0}\right) = 59.04^0$$

$$\delta'CD\cos\theta = \delta_{CD}$$

$$\text{or, } \delta'_{CD} = \frac{\delta_{CD}}{\cos 39.81^0} = 1.302\delta_{CD}$$

$$\delta'_{BC} = \frac{\delta_{BC}}{\cos 59.04^0} = 1.944\delta_{BC}$$

From similar triangles we find,

$$\frac{\delta'_{BC}}{\delta'_{CD}} = \frac{5.0}{2.5} = 2$$

$$\text{or, } \delta'_{BC} = 2\delta'_{CD}$$

$$\text{or, } 1.944\delta_{BC} = 2\times 1.302\delta_{CD}$$

$$\text{or, } \delta_{BC} = 1.34\delta_{CD} \qquad (i$$

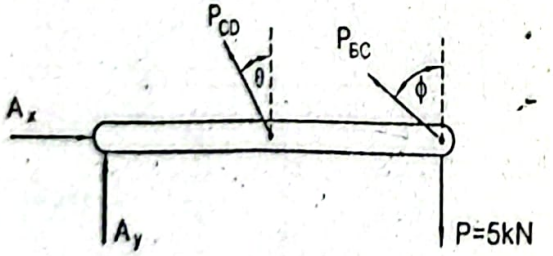

In static equilibrium condition balancing moment about A (Figure above),

$$+\circlearrowleft \Sigma M_A = 0:$$

$$P_{CD}\cos\theta\times 2.5 + P_{BC}\cos\phi\times 5 = 5.0\times 10^3\times 5.0$$

$$\text{or, } P_{CD}\cos 39.81^0\times 2.5 + P_{BC}\cos 59.04^0\times 5.0 = 5.0\times 10^3\times 5.0$$

$$\text{or, } P_{CD} + 1.34P_{BC} = 13017.92 \qquad (ii)$$

Deflection in the wire CD,

$$\delta_{CD} = \frac{P_{CD} \times L_{BC}}{AE}$$

and deflection in the wire BC,

$$\delta_{BC} = \frac{P_{BC} \times L_{BC}}{AE}$$

Length of the wire CD, $L_{CD} = \sqrt{3^2 + 2.5^2}\, m = 3.91m$

Length of the wire BC, $L_{BC} = \sqrt{3^2 + 5^2}\, m = 5.83m$

Therefore, $$\delta_{CD} = \frac{P_{CD} \times 3.91}{AE}$$

and, $$\delta_{BC} = \frac{P_{BC} \times 5.83}{AE}$$

Substituting these values in Equation (i) we find,

$$\frac{5.83 \times P_{BC}}{AE} = 1.34 \times 3.91 \times \frac{P_{CD}}{AE}$$

or, $$P_{BC} = 0.9 P_{CD} \qquad (iii)$$

Substituting this value in Equation (ii),

$$P_{CD} + 1.34 \times 0.9 P_{CD} = 13017.92$$

or, $$P_{CD} = 5901.14N$$

Substituting this value in Equation (iii) we get,

$$P_{BC} = 5311.03N$$

Therefore, stress in the wire BC,

$$\sigma_{BC} = \frac{P_{BC}}{A} = \frac{4P_{BC}}{\pi d^2}$$

$$= \frac{4 \times 5311.03}{\pi 6^2} MPa$$

$$= 187.84MPa \quad \textbf{Answer}$$

and stress in the wire CD,

$$\sigma_{CD} = \frac{P_{CD}}{A} = \frac{4 \times P_{CD}}{\pi d^2}$$

$$= \frac{4 \times 5901.14}{\pi \times 6^2} MPa$$

$$= 208.71MPa \quad \textbf{Answer}$$

Problem P1.54:

A $400mm$ long composite tube is fabricated by shrink fit from a steel tube and a brass tube. It is then subjected to an axial load $P = 100kN$ as shown in Figure P1.54. Cross-sectional areas of the steel and brass tubes are respectively $900mm^2$ and $1200mm^2$. Find the modulus of elasticity of an equivalent tube having the same length, same cross-sectional area $2100mm^2$ and same deformation. Consider $E_{st} = 200GPa$ and $E_{br} = 100GPa$.

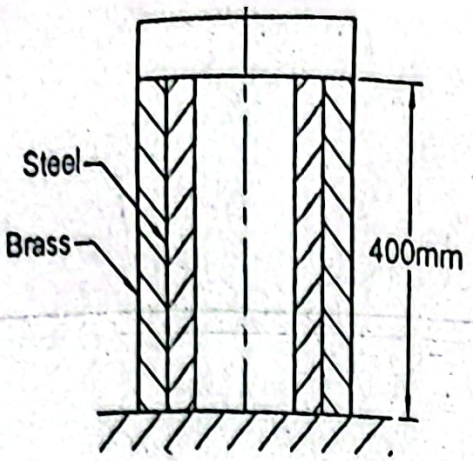

Figure P1.54

Given Data:

Axial load, $P = 100kN$

Cross-sectional area of steel, $A_{st} = 900mm^2$

Cross-sectional area of brass, $A_{br} = 1200mm^2$

Length of tube, $L = 400mm$

Modulus of elasticity of steel, $E_{st} = 200GPa$

Modulus of elasticity of brass, $E_{st} = 100GPa$

To Find:

- Modulus of elasticity of an equivalent tube, E

Solution:

In static equilibrium condition,

$$+\uparrow \sum F_y = 0:$$

$$\text{or, } P_{st} + P_{br} = P$$

$$\text{or, } P_{st} + P_{br} = 100 \times 10^3 \quad (i)$$

Deformation in both the tubes will be same, therefore,

$$\delta_{br} = \delta_{st}$$

$$\text{or, } \frac{P_{br} L}{A_{br} E_{br}} = \frac{P_{st} L}{A_{st} E_{st}}$$

$$\text{or, } P_{br} = \frac{A_{br}}{A_{st}} \times \frac{E_{br}}{E_{st}} \times P_{st}$$

$$\text{or, } P_{br} = \frac{1200}{900} \times \frac{100}{200} \times P_{st}$$

$$\text{or, } P_{br} = 0.67 P_{st}$$

Substituting this value in Equation (i),

$$P_{st} + 0.67 P_{st} = 100000$$

$$\text{or, } P_{st} = 60000N$$

Therefore, $$\delta_{st} = \frac{P_{st} L}{A_{st} E_{st}}$$

or, $$\delta_{st} = \frac{60000 \times 400}{900 \times 200 \times 10^3} mm = 0.133mm$$

Now for an equivalent tube, $$\delta = \frac{PL}{AE}$$

or, $$0.133 = \frac{100 \times 10^3 \times 400}{2100 \times E}$$

or, $E = 143.22GPa$ *Answer*

Problem P1.55:

A rigid bar AB of negligible weight is pinned at O and is attached to two steel wires AC and BD having the same diameter as shown in Figure P1.55. The wire AC is *1.0mm* shorter than necessary. The bar remains horizontal initially. Find the stress in each wire AC and BD, when they are assembled. Consider $E_{st} = 200GPa$.

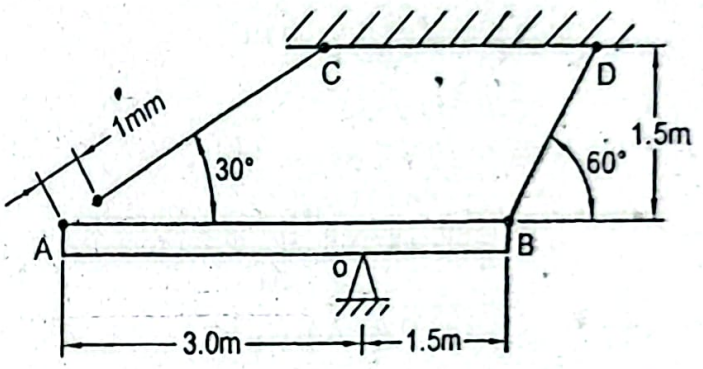

Figure P1.55

Given Data:

Wire AC is *1.0mm* shorter

Modulus of elasticity of steel, $E_{st} = 200GPa$

To Find:

- Stress in each wire, σ_{AC} and σ_{BD}

Solution:

The following figure shows the deformations after assembly. The final position is represented by the dotted line.

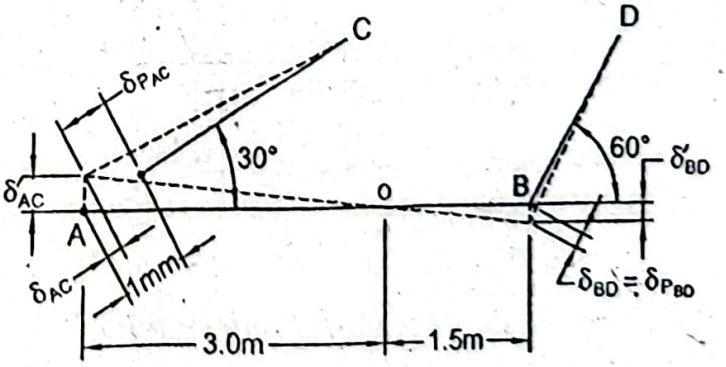

From the similar triangles, $\frac{\delta_{AC}}{\delta'_{BD}} = \frac{3}{1.5} = 2$

or, $\delta'_{AC} = 2\delta'_{BD}$

But we have, $\delta_{AC} = \delta'_{AC} \sin 30^0$

or, $\delta'_{AC} = 2\delta_{AC}$

and, $\delta_{BD} = \delta'_{BD} \sin 60^0$

or, $\delta'_{BD} = 1.155\delta_{BD}$

Substituting these values in Equation (i),

$$2\delta_{AC} = 2 \times 1.155\delta_{BD}$$

or, $\delta_{AC} = 1.155\delta_{BD}$

Due to the internal force developed the wire AC is elongated by $\delta_{P_{AC}}$ and the wire B elongated by $\delta_{P_{BD}}$. Then according to the problem,

$$\delta_{P_{AC}} + \delta_{AC} = 1.0$$

Substituting the value of δ_{AC} from Equation (ii), we find,

$$\delta_{P_{AC}} + 1.155\delta_{BD} = 1.0$$

But we have, $\delta_{BD} = \delta_{P_{BD}}$

Therefore, $\delta_{P_{AC}} + 1.155\delta_{P_{BD}} = 1.0$

or, $\frac{P_{AC}L_{AC}}{AE} + 1.155\frac{P_{BD}L_{BD}}{AE} = 1.0$ (i

But, $L_{AC} \sin 30^0 = 1.5$

or, $L_{AC} = 3m$

and, $L_{BD} \sin 60^0 = 1.5$

or, $L_{BD} = 1.732m$

Substituting these values in Equation (iii),

$$P_{AC} \times 3 \times 10^3 + 1.155 \times P_{BD} \times 1.732 \times 10^3 = AE$$

or, $P_{AC} + 0.667P_{BD} = 3.333 \times 10^{-4} AE$ (i

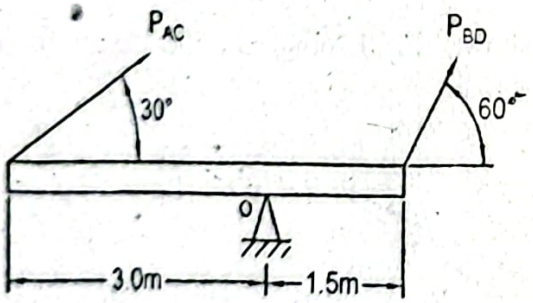

Now taking moment about O (Figure above),

$$+\circlearrowleft \sum M_O = 0$$

$$P_{AC} \sin 30^0 \times 3 = P_{BD} \sin 60^0 \times 1.5$$

or, $P_{AC} = 0.866P_{BD}$ (v

Now from Equations (iv) and (v),

$$0.866P_{BD} + 0.667P_{BD} = 3.333\times10^{-4}AE$$

$$\text{or, } \frac{P_{BD}}{A} = 2.174\times10^{-4}\times200\times10^{3}$$

$$\text{or, } \sigma_{BD} = 43.48MPa \text{ Answer}$$

Considering Equation(v), $P_{AC} = 0.866P_{BD}$

$$\text{or, } \frac{P_{AC}}{A} = 0.866\frac{P_{BD}}{A}$$

$$\text{or, } \frac{P_{AC}}{A} = 0.866\times2.174\times10^{-4}\times200\times10^{3}$$

$$\text{or, } \sigma_{AC} = 37.65MPa \text{ Answer}$$

Problem P1.56:

A solid steel cylinder is placed concentrically within an aluminum hollow cylinder as shown in Figure P1.56. Both the cylinders are subjected to an axial load $P = 250kN$ and they have the same length $600mm$. If the cross-sectional areas of the steel and the aluminum cylinders are respectively $2500mm^2$ and $5000mm^2$, determine the rise of temperature at which the entire load will be carried by the hollow aluminum cylinder only. Consider $E_{st} = 200GPa$, $\alpha_{st} = 11.7\times10^{-6}\,m/m^0C$, $E_{al} = 70GPa$, and $\alpha_{al} = 23.1\times10^{-6}\,m/m^0C$.

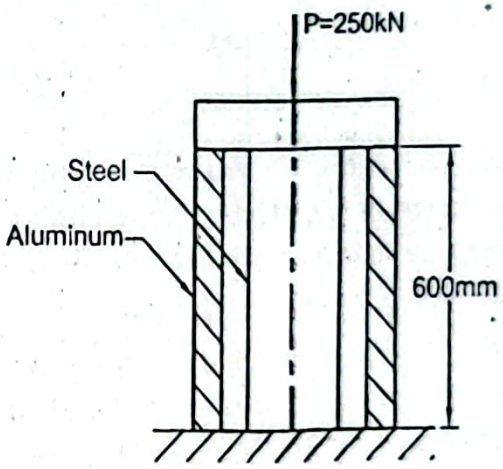

Figure P1.56

Given Data:

Length of cylinder, $L = 600mm$

Axial load, $P = 250kN$

Cross-sectional area of steel cylinder, $A_{st} = 2500mm^2$

Cross-sectional area of aluminum cylinder, $A_{al} = 5000mm^2$

Modulus of elasticity of steel, $E_{st} = 200GPa$

Modulus of elasticity of aluminum, $E_{al} = 70GPa$

Coefficient of thermal expansion of steel, $\alpha_{st} = 11.7\times10^{-6}\,m/m^0C$

Coefficient of thermal expansion of aluminum, $\alpha_{al} = 23.1 \times 10^{-6}\ m/m^0C$

To Find:

- Temperature rise, ΔT

Solution:

The following figure shows various deformations.

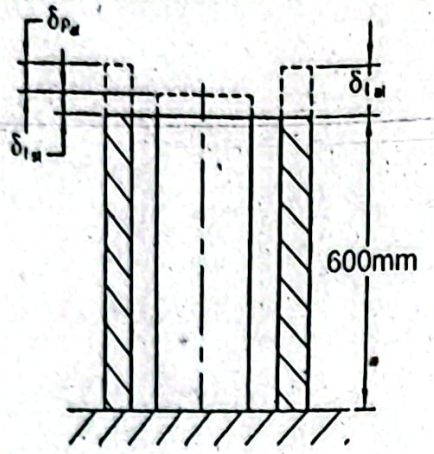

When the entire load is carried by the aluminum cylinder only, a relation of deformati is obtained as follows,

$$\delta_{tal} - \delta_{tst} = \delta P_{al}$$

$$\text{or, } \alpha_{al} L\Delta T - \alpha_{st} L\Delta T = \frac{PL}{A_{al} E_{al}}$$

$$\text{or, } \left(23.1\times10^{-6}\times600 - 11.7\times10^{-6}\times600\right)\Delta T = \frac{250\times10^{3}\times60}{5000\times70\times10^{}}$$

$$\text{or, } \Delta T = 62.66^0C \text{ Answer}$$

Problem P1.57:

A solid steel cylinder is placed concentrically inside a hollow copper cylinder as show in Figure P1.57. Initially the length of the steel cylinder was $0.10mm$ shorter than th copper cylinder. Both the cylinders are subjected to an axial load of $250kN$. Cross sectional areas of the steel and copper cylinders are respectively $1000mm^2$ an $5000mm^2$. Determine the stress in each cylinder if the temperature decreases by 30^0C At what temperature drop the full load will be carried by the steel cylinder only. Conside $E_{st} = 200GPa$, $\alpha_{st} = 11.7\mu m/m^0C$, $E_{cu} = 120GPa$ and $\alpha_{cu} = 16.8\mu m/m^0C$.

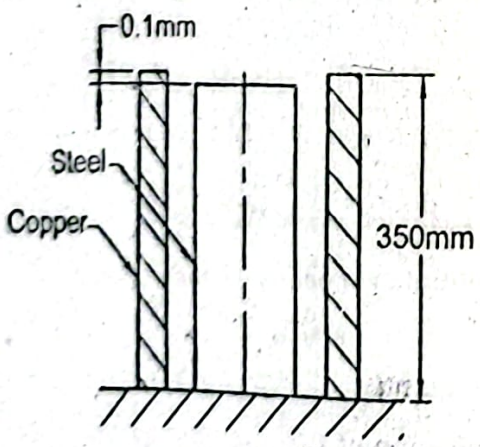

Figure P1.57

Given Data:

Axial load, $P = 250kN$

Cross-sectional area of steel cylinder, $A_{st} = 10000mm^2$

Cross-sectional area of copper cylinder, $A_{cu} = 5000mm^2$

Decrease of temperature, $\Delta T = 30^0 C$

Length of cylinder, $L = 350mm$

Modulus of elasticity of steel, $E_{st} = 200GPa$

Modulus of elasticity of copper, $E_{cu} = 120GPa$

Coefficient of thermal expansion of steel, $\alpha_{st} = 11.7\mu m/m^0C$

Coefficient of thermal expansion of copper, $\alpha_{cu} = 16.8\mu m/m^0C$

To Find:

- Stress in each cylinder, σ_{st} and σ_{cu}
- Temperature drop, $\Delta T'$

Solution:

The following figure shows the various deformations.

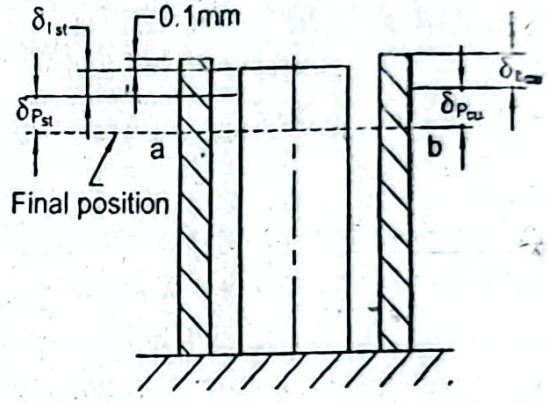

The final position is indicated by a-b in the above figure. Considering the same length for solid and hollow cylinders for simplification which will yield very negligible effect in result, a relation of deformations is obtained as,

$$\delta_{t\,cu} + \delta_{P\,cu} = \left(\delta_{t\,st} + \delta_{P\,st}\right) + 0.1$$

$$\text{or, } \alpha_{cu} \times L \times \Delta T + \frac{P_{cu} \times L}{A_{cu} \times E_{cu}} = \alpha_{st} \times L \times \Delta T + \frac{P_{st} \times L}{A_{st} \times E_{st}} + 0.1$$

$$\text{or, } 16.8 \times 10^{-6} \times 350 \times 30 + \frac{P_{cu} \times 350}{5000 \times 120 \times 10^3}$$

$$= 11.7 \times 10^{-6} \times 350 \times 30 + \frac{P_{st} \times 350}{10000 \times 200 \times 10^3} + 0.1$$

$$\text{or, } 5.833 \times 10^{-7} P_{cu} - 1.75 \times 10^{-7} P_{st} = 0.04645$$

$$\text{or, } P_{cu} - 0.3 P_{st} = 79633.12 \qquad (i)$$

From the force balance in the vertical direction,

$$P_{st} + P_{cu} = P$$

$$\text{or, } P_{st} + P_{cu} = 250000 \qquad (ii)$$

$$P_{st} + 0.3P_{st} + 79033.1 = \cdots$$

$$\text{or, } P_{st} = 131051.45N$$

Substituting this value in Equation(ii),

$$P_{cu} = 118948.55N$$

Therefore, the stress in the steel cylinder,

$$\delta_{st} = \frac{P_{st}}{A_{st}} = \frac{131051.45}{10000} = 13.11MPa \text{ Answer}$$

and stress in the copper cylinder,

$$\delta_{cu} = \frac{P_{cu}}{A_{cu}} = \frac{118948.55}{5000} = 23.79MPa \text{ Answer}$$

When the full load will be carried by the steel cylinder only, we get a relati deformations as,

$$\delta_{tcu} = (\delta_{tst} + \delta P_{st}) + 0.1$$

$$\text{or, } \alpha_{cu} \times L \times \Delta T' = \alpha_{st} \times L \times \Delta T' + \frac{P \times L}{A_s E_{st}} + 0.1$$

$$\text{or, } 16.8 \times 10^{-6} \times 350 \times \Delta T' = 11.7 \times 10^{-6} \times 350 \times \Delta T' + \frac{250 \times 10^3 \times 350}{10000 \times 200 \times 10^3} + 0.1$$

$$\text{or, } \Delta T' = 80.53^0 C \text{ Answer}$$

Problem P1.58:

A steel member of circular cross-section having diameter of $20mm$ and length 200 is placed between two rigid walls at $30^0 C$, such that the ends of the member just tou the walls and remains stress free. If the final temperature of the member is 60 determine the thermal stress developed in the member. Consider $E = 200GPa$ $\alpha = 12 \times 10^{-6} m/m^0 C$.

Given Data:

Diameter of member, $d = 20mm$

Length of member, $L = 200mm$

Initial temperature, $t_i = 30^0 C$

Final temperature, $t_f = 60^0 C$

Coefficient of thermal expansion, $\alpha = 12 \times 10^{-6} m/m^0 C$

Modulus of elasticity, $E = 200GPa$

To Find:

- Thermal stress, σ

Solution:

Free deflection due to temperature change,

$$\delta_t = \alpha L \Delta T$$

$$\text{where, } \Delta T = (t_f - t_i) = (60^0 C - 30^0 C) = 30^0 C$$

Therefore,

$$\delta_t = 12\times10^{-6}\times200\times10^{3}\times30$$
$$= 72\times10^{-6}\,m = 0.072mm$$

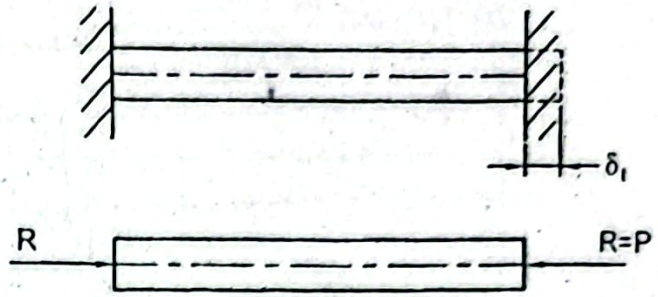

The rigid wall will resist the free deflection; as a result a reaction (Figure above) will be developed in the rigid wall which is denoted by R. An axial internal force P will be developed and reaction R will be equal to P. Deformation due to this force P,

$$\delta_p = \frac{PL}{AE}$$

$$\text{or, } \delta_t = 0.072 = \frac{P\times200\times4}{\pi\times20^2\times200\times10^3} \quad \left(\text{Here, } A\frac{\pi d^2}{4}\right)$$

$$\text{or, } p = 22.62kN$$

Therefore, the thermal stress, $\sigma = \frac{P}{A} = \frac{P\times4}{\pi d^2}$

$$= \frac{22.62\times10^3\times4}{\pi\times20^2}$$
$$= 72MPa \text{ (Compression) } \textit{Answer}$$

Problem P1.59:

A $500mm$ long steel bar is firmly attached to a rigid wall at one end and at the other end there is a gap between the bar end and the rigid wall plane as shown in Figure P1.59. If the temperature of the bar increases by 60^0C and the stress in the bar is not to exceed $75MPa$, determine the size of the gap. Use $E_{st} = 200GPa$ and $\alpha_{st} = 11.7\mu m/m^0C$.

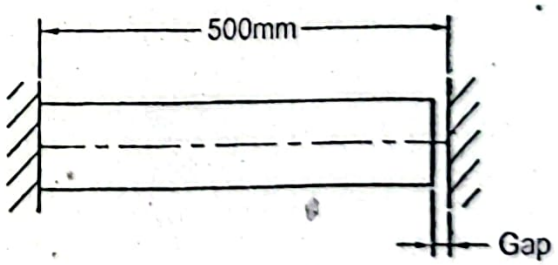

Figure P1.59

Given Data:

Length of bar, $L_{st} = 500mm$

Increase of temperature, $\Delta T = 60^0C$

Limiting stress in bar, $\sigma_a = 75MPa$

Modulus of elasticity of steel, $E_{st} = 200GPa$

Coefficient of expansion of steel, $\alpha_{st} = 11.7 \times 10^{-6}$/°C

To Find:

- Gap size, δ

Solution:

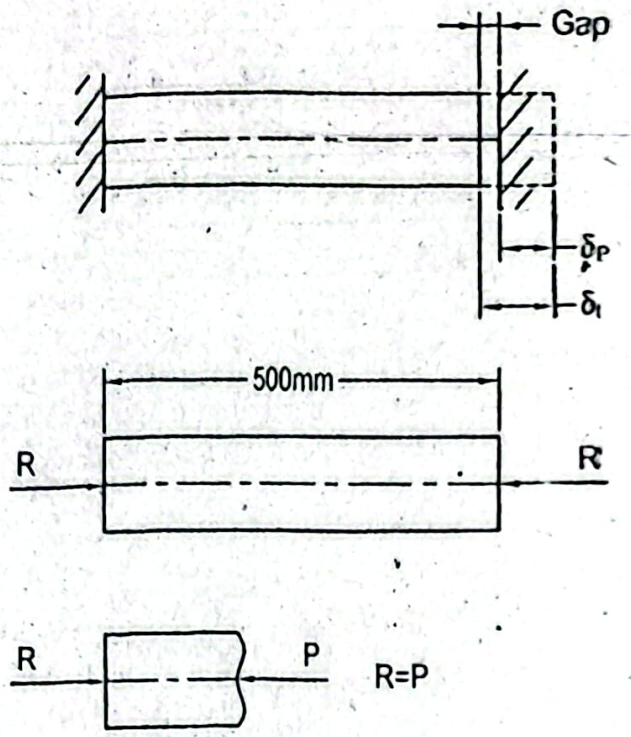

Free deflection due to temperature change,

$$\delta_t = \alpha_{st} L_{st} \Delta T$$
$$= 11.7 \times 10^{-6} \times 500 \times 60 mm$$
$$= 0.351 mm$$

The rigid wall will resist the deflection by an amount δ_P where, $\delta_P = (\delta_t - \delta)$. result a reaction R will be developed in the rigid wall as shown in the above figure axial internal force P will be developed in the bar and reaction R will be equal to P

Deformation due to this force P, $\delta_P = \frac{PL_{st}}{A_s E_{st}} = \frac{\sigma_a L}{E_{st}}$

$$\text{or, } (\delta_t - \delta) = \frac{\sigma_a L}{E_{st}}$$

$$\text{or, } 0.351 - \delta = \frac{75 \times 500}{200 \times 10^3}$$

$$\text{or, } \delta = 0.1635 mm \text{ Answer}$$

Problem P1.60:

A stepped circular bar made of steel is placed between two rigid walls in close condition at temperature $20^0 C$ as shown in Figure P1.60. Determine the stresses in portions AB and BC when the temperature increases to $90^0 C$. Consider $d = 20$ $E_{st} = 200 GPa$ and $\alpha = 12 \times 10^{-6} m/m^0 C$.

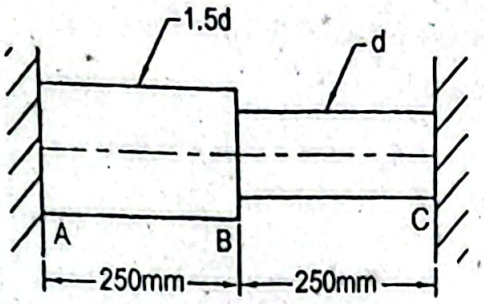

Figure P1.60

Given Data:

Initial temperature, $t_i = 20^0 C$

Final temperature, $t_f = 90^0 C$

Diameter, $d = 20mm$

Modulus of elasticity for steel, $E_{st} = 200GPa$

Coefficient of thermal expansion, $\alpha_{st} = 12 \times 10^{-6} m/m^0 C$

To Find:

. Stresses in portions AB and BC, σ_{AB} and σ_{BC}

Solution:

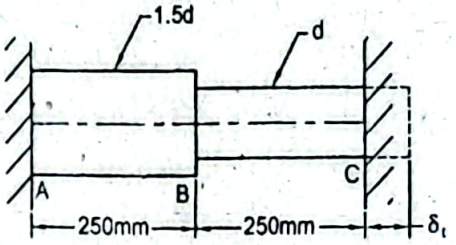

Free deflection

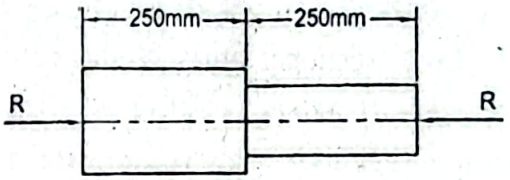

Reaction developed

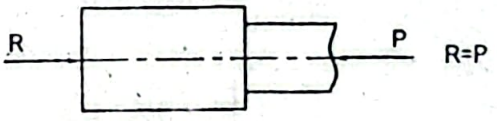

Axial force in portion BC

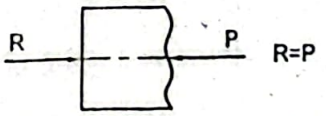

Axial force in portion AB

Change of temperature, $\Delta T = (t_f - t_i) = (90 - 20) = 70^0 C$

Free deflection due to temperature change as shown in the above figure,

$$\delta_t = \alpha_{st} L \Delta T$$

This free deflection will be resisted by ... R developed which will create an axial internal force P as shown in the above figure.

Deformation due to this axial force P,

$$\delta_P = \frac{P_{AB}L_{AB}}{A_{AB}E_{st}} + \frac{P_{BC}L_{BC}}{A_{BC}E_{st}}$$

$$= \frac{P_{AB}\times 250\times 4}{\pi\times(1.5\times 20)^2\times 200\times 10^3} + \frac{P_{BC}\times 250\times 4}{\pi\times 20^2\times 200\times 10^3}$$

$$= 1.77\times 10^{-6}P_{AB} + 3.98\times 10^{-6}P_{BC}$$

But we have, $P_{AB} = P_{BC} = P$

Therefore, $\delta_P = 5.75\times 10^{-6}P$

Since the wall is rigid, the total deformation, $\delta = 0$

That is, $\delta = \delta_t + \delta_P = 0$

Substituting the values, $0.42 + 5.75\times 10^{-6}P = 0$

or, $P = -73043.48N$

That is, $P = 73043.48N$ (Compression)

Therefore, the required stresses are,

$$\sigma_{AB} = \frac{P}{A_{AB}} = \frac{73043.48\times 4}{\pi\times(1.5\times 20)^2} = 103.34MPa \text{ Answer}$$

$$\sigma_{BC} = \frac{P}{A_{BC}} = \frac{73043.48\times 4}{\pi\times 20^2} = 2.32.51MPa \text{ Answer}$$

Problem P1.61:

A composite stepped bar made of copper and steel is firmly attached to a rigid wall end and there is a gap of $0.03mm$ between the other end and the rigid wall pl shown in Figure P1.61. Cross-sectional areas in the copper and steel portio respectively $20000mm^2$ and $10000mm^2$. Effect of bending action is negl Determine the stresses in the steel and copper portions for a temperature rise of . $E_{st} = 200GPa$, $\alpha_{st} = 11.7\times 10^{-7}m/m^0C$, $E_{cu} = 120GPa$ and $\alpha_{cu} = 16.8\times 10^{-6}m/m$.

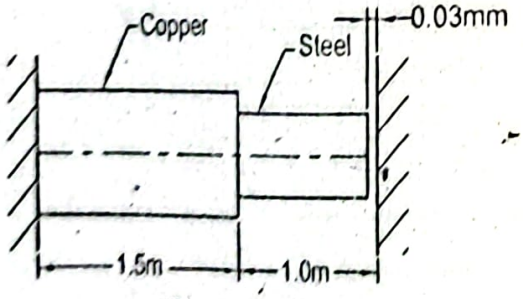

Figure P1.61

Given Data:

Gap between bar end and wall plane, $\delta = 0.03mm$

Cross-sectional area in copper portion, $A_{cu} = 20000mm^2$

Cross-sectional area in steel portion, $A_{st} = 10000mm^2$

Temperature rise, $\Delta T = 30^0 C$

Modulus of elasticity of steel, $E_s = 200GPa$

Modulus of elasticity of copper, $E_{cu} = 120GPa$

Coefficient of thermal expansion of steel, $\alpha_s = 11.7 \times 10^{-6} m/m^0 C$

Coefficient of thermal expansion of copper, $\alpha_{cu} = 16.8 \times 10^{-6} m/m^0 C$

To Find:

- Stress in copper portion, σ_{cu}
- Stress in steel portion, σ_s

Solution:

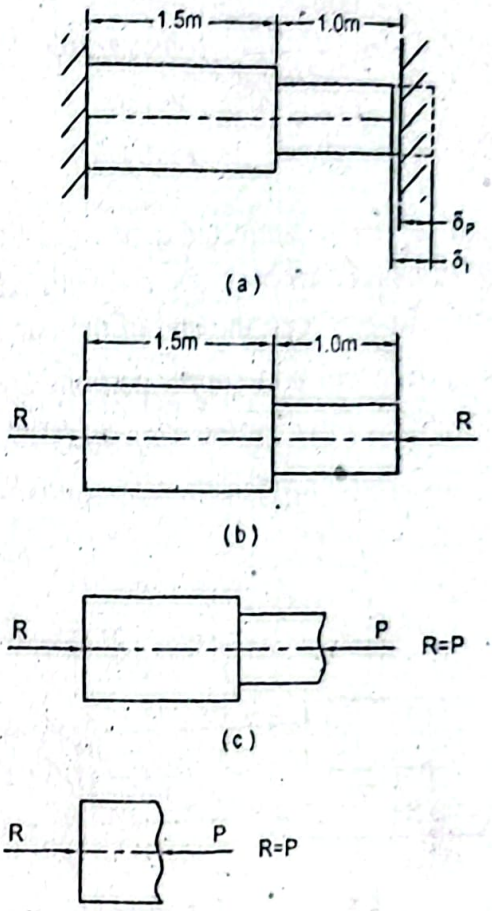

Free deflection due to temperature change as shown in above Figure (a),

$$\delta_t = \alpha_{cu} L_{cu} \Delta T + \alpha_s L_s \Delta T$$

$$\text{or, } \delta_t = 16.8 \times 10^{-6} \times 1.5 \times 10^3 \times 30 + 11.7 \times 10^{-6} \times 1.0 \times 10^3 \times 30$$

$$= 1.107mm$$

Deflection resisted by the rigid wall,

$$\delta_P = (\delta_t - 0.03)$$

$$= (1.107 - 0.03)mm = 1.077mm$$

To resist this deflection a reaction R as shown in Figure (b) is developed. Due to this reaction an internal axial force P in the steel and copper sections is developed which is

A relation of deflection δ_P is then obtained as,

$$\delta_P = \frac{P \times L_{cu}}{A_{cu} E_{cu}} + \frac{P \times L_{st}}{A_{st} E_{st}}$$

$$\text{or, } 1.077 = \frac{P \times 1.5 \times 10^3}{20000 \times 120 \times 10^3} + \frac{P \times 1.0 \times 10^3}{10000 \times 200 \times 10^3}$$

$$\text{or, } P = 957kN$$

Therefore, the stress in the copper portion,

$$\sigma_{cu} = \frac{P}{A_{cu}} = \frac{957 \times 10^3}{20000} = 47.87MPa \text{ (Compression) } \textit{Answe}$$

and stress in the steel portion,

$$\sigma_{st} = \frac{P}{A_{st}} = \frac{957 \times 10^3}{10000} = 95.73MPa \text{ (Compression) } \textit{Answer}$$

Problem P1.62:

A composite bar of steel and copper is subjected to an axial load $P = 1500kN$ as sl in Figure P1.62. The bar is attached firmly at one end with a rigid wall and at the end there is a gap of $0.08mm$ in between the end of the bar and the plane of the wall. Cross-sectional areas in the steel and copper portions are respectively 20000 and $10000mm^2$. If the temperature of the bar increases by 20^0C, determine the stress the different portions of the bar. Consider $E_{st} = 200GPa$, $\alpha_{st} = 11.7\mu m/m$ $E_{cu} = 120GPa$ and $\alpha_{cu} = 16.8\mu m/m^0C$.

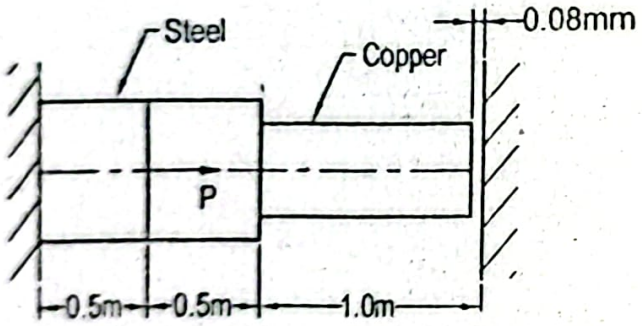

Figure P1.62

Given Data:

Axial load, $P = 150kN$

Cross-sectional area in steel portion, $A_{st} = 20000mm^2$

Cross-sectional area in copper portion, $A_{cu} = 10000mm^2$

Temperature rise, $\Delta T = 20^0C$

Gap between end of the bar and plane of rigid wall, $\delta = 0.08mm$

Modulus of elasticity of steel, $E_{st} = 200GPa$

Modulus of elasticity of copper, $E_{cu} = 120GPa$

Coefficient of thermal expansion of steel, $\alpha_{st} = 11.7\mu m/m^0C$

Coefficient of thermal expansion of copper, $\alpha_{cu} = 16.8\mu m/m^0C$

To Find:

- Stresses in steel portion, σ_{st_1} and σ_{st_2}
- Stress in copper portion, σ_{cu}

Solution:

Free deflection due to the axial load P,

$$\delta_P = \frac{PL_{st}}{A_{st}E_{st}} \quad \text{(Since the load } P \text{ will make elongation at its left)}$$

$$= \frac{1500\times10^3\times0.5\times10^3}{20000\times200\times10^3}$$

$$= 0.1875mm$$

Free deflection due to change of temperature by 20^0C,

$$\delta_t = \alpha_{st}L_{st}\Delta T + \alpha_{cu}L_{cu}\Delta T$$

$$= 11.7\times10^{-6}\times1.0\times10^3\times20 + 16.8\times10^{-6}\times1.0\times10^3\times20$$

$$= 0.57mm$$

Therefore, the total free deflection due to the axial load and temperature change.

$$\delta = (0.1875+0.57)mm = 0.7575mm$$

According to the problem the amount of deflection resisted by the reaction.

$$\delta_R = (\delta - 0.08)$$

$$= (0.7575-0.08)mm = 0.6775mm$$

Again the amount of deflection that will be resisted by the reaction R_2,

$$\delta_R = \frac{R_2\times L_{st}}{A_{st}E_{st}} + \frac{R_2\times L_{cu}}{A_{cu}E_{cu}}$$

Therefore, $$0.6775 = \frac{R_2\times1.0\times10^3}{20000\times200\times10^3} + \frac{R_2\times1.0\times10^3}{10000\times120\times10^3}$$

or, $R_2 = 625.39kN$

The following figure shows the free body diagram of the entire bar.

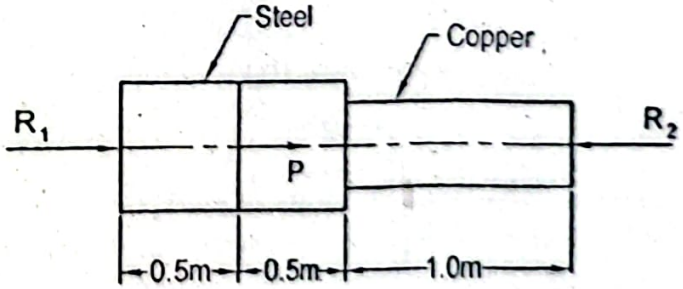

From the force balance, $+\rightarrow \sum F_x = 0$:

or, $R_1 + P = R_2$

or, $R_1 = R_2 - P$

$$= (625.39-1500)kN = -874.61kN$$

Stress in the copper portion,

$$\sigma_{cu} = \frac{R_2}{A_{cu}} = \frac{625.39 \times 10^3}{10000} MPa = 62.54 MPa \text{ (Compression)} Ans$$

Stress at the left of the steel portion,

$$\delta_{st_l} = \frac{R_1}{A_{st}} = \frac{-874.61 \times 10^3}{20000} MPa = -43.73 MPa$$

That is, $\delta_{st_l} = 43.73 MPa$ (Tension) *Answer*

Now to find the stress at the right of the steel portion a section is taken as follows,

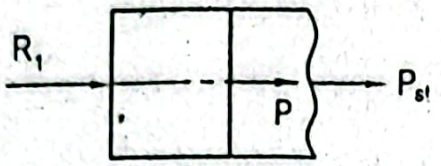

From the force balance, $+\rightarrow \sum F_x = 0$:

$$\text{or, } R_1 + P + P_{st} = 0$$

$$\text{or, } P_{st} = -R_1 - P$$

$$= (874.61 - 1500)kN$$

$$= -625,39kN$$

Therefore, the stress at the right of the steel portion,

$$\sigma_{st_r} = \frac{P_{st}}{A_{st}} = \frac{-625.39}{20000} MPa = -31.27 MPa$$

That is, $\sigma_{st_r} = 31.27 MPa$ (Compression) *Answer*

Problem P1.63:

One steel bar A and one bronze bar B are supported by the rigid walls at $0^0 C$ such th there is a gap of $0.5mm$ between them as shown in Figure P1.63. Determine the stress each bar at $100^0 C$.

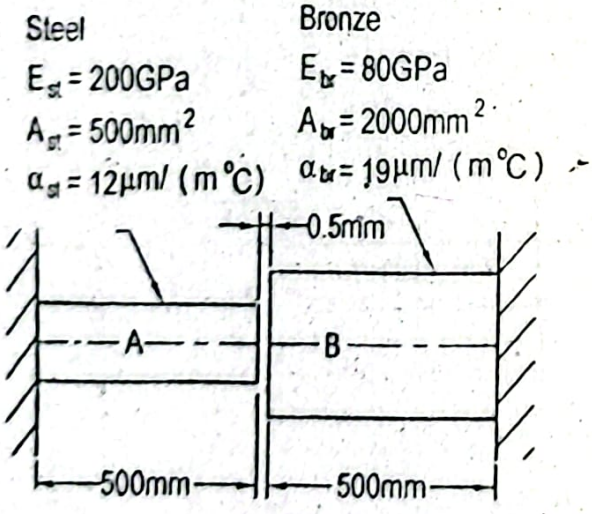

Figure P1.63

Given Data:

Initial gap, $\delta = 0.5mm$

Initial temperature, $t_i = 0^0 C$

Final temperature, $t_f = 100^0 C$

To Find:

. Stress in steel bar, σ_{st}

. Stress in bronze bar, σ_{br}

Solution:

Total deflection due to temperature change.

$$\begin{aligned}\delta_t &= \delta_s + \delta_b \\ &= \alpha_s L_s \Delta T + \alpha_b L_b \Delta T \\ &= \left(12\times10^{-6}\times0.5\times\Delta T + 19\times0.5\times\Delta T\right)m \\ &= \left(12\times10^{-6}\times0.5\times100 + 19\times10^{-6}\times0.5\times100\right)\times10^3\, mm \\ &= 1.55mm\end{aligned}$$

According to the problem there will be a free deflection of $0.5mm$. After that the two bars will be compressed with an internal axial force P and this force will be equal on each of the bars. The force P will create a deformation and this deformation,

$$\begin{aligned}\delta_P &= \frac{PL_{st}}{A_{st}E_{st}} + \frac{PL_{br}}{A_{br}E_{br}} \\ &= \frac{P\times0.5\times10^3}{500\times200\times10^3} + \frac{P\times0.5\times10^3}{2000\times80\times10^3} \\ &= 8.125\times10^{-6}P\end{aligned}$$

A relation of deformations is obtained as,

$$(1.55-0.5) = 8.125\times10^{-6}P$$

or, $P = 129.23kN$

Therefore, stress in bar A, $\sigma_{st} = \frac{P}{A_{st}} = \frac{129.23\times10^3}{500} MPA$

$= 258.46MPa$ ***Answer***

Stress in bar B, $\sigma_{br} = \frac{P}{A_{br}} = \frac{129.23}{2000} MPa$

$= 64.62MPa$ ***Answer***

Problem P1.64:

A rigid bar of negligible weight is attached to two vertical rods as shown in Figure P1.64. It is pinned at O and remains horizontal initially. Cross-sectional areas of the steel and bronze rods are respectively $250mm^2$ and $1000mm^2$. Find the stress in the bronze bar when the temperature of the steel bar is decreased by $50^0 C$. Consider $E_{st} = 200GPa$, $\alpha_{st} = 11.7\times10^{-6}\, m/m^0C$, $E_{br} = 80GPa$ and $\alpha_{br} = 18.9\times10^{-6}\, m/m^0C$.

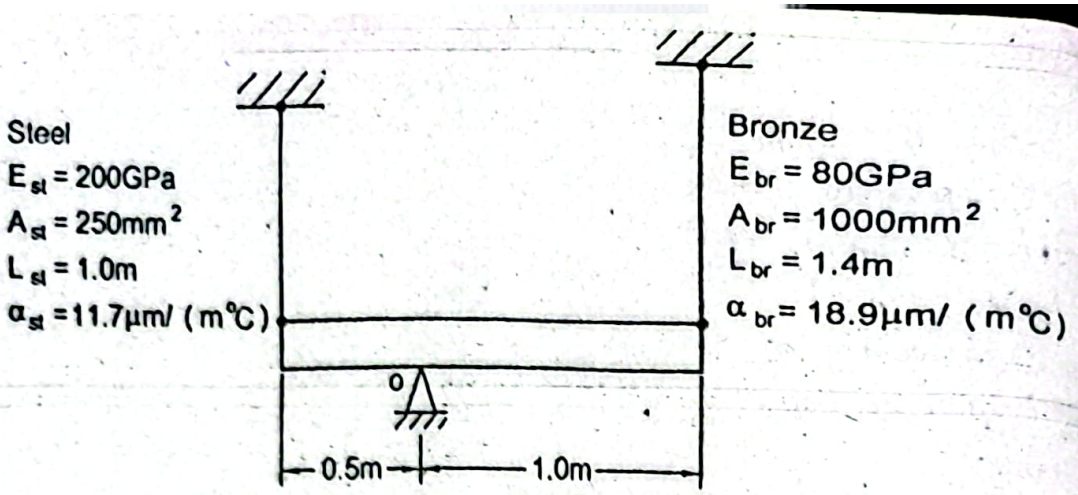

Figure P1.64

Given Data:

Cross-sectional area of steel rod, $A_{st} = 250mm^2$

Cross-sectional area of bronze rod, $A_{br} = 1000mm^2$

Length of steel rod, $L_{st} = 1.0m$

Length of bronze rod, $L_{br} = 1.4m$

Temperature decrease, $\Delta T = 50^0 C$

Modulus of elasticity of steel, $E_{st} = 200GPa$

Modulus of elasticity of bronze, $E_{br} = 80GPa$

Coefficient of thermal expansion of steel, $\alpha_{st} = 11.7 \times 10^{-6}\, m/m^0 C$

Coefficient of thermal expansion of bronze, $\alpha_{br} = 18.9 \times 10^{-6}\, m/m^0 C$

To Find:

- Stress in bronze bar, σ_{br}

Solution:

The following figure shows deflections.

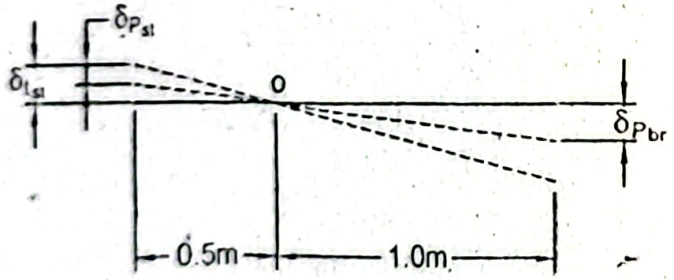

Total deflection in the bronze rod = δ_{br}

Total deflection in the steel rod = $\left(\delta_{tst} - \delta_{Pst}\right)$

where, δ_{tst} = Free contraction due to temperature

δ_{Pst} = Deformation due to force developed in the steel rod

δ_{Pbr} = Deformation due to force developed in the bronze rod

Now from similar triangles, $\frac{\delta_{Pbr}}{\delta_{tst}-\delta_{Pst}}=\frac{1.0}{0.5}=2$

$$\text{or, } \delta_{Pbr}=2\left(\delta_{tst}-\delta_{Pst}\right) \qquad (i)$$

We have,

$$\delta_{tst}=\alpha_{st}L_{st}\Delta T$$

$$=11.7\times10^{-6}\times1.0\times10^{3}\times50mm=0.585mm$$

From the force balance, $P_{br}\times1.0=P_{st}\times0.5$

$$\text{or, } P_{st}=2P_{br} \qquad (ii)$$

We have, $\delta_{Pst}=\frac{P_{st}L_{st}}{A_{st}E_{br}}=\frac{P_{st}\times1.0\times10^{3}}{250\times200\times10^{3}}=2\times10^{-5}P_{st}$

and, $\delta_{Pbr}=\frac{P_{br}L_{br}}{A_{br}E_{br}}=\frac{P_{br}\times1.4\times10^{3}}{1000\times80\times10^{3}}=1.75\times10^{-5}P_{br}$

Substituting these values in Equation(i),

$$1.75\times10^{-5}P_{br}=2\times0.585-2\times2\times10^{-5}P_{st}$$

Now substituting the value of P_{st} from Equation(ii),

$$1.75\times10^{-5}P_{br}=1.17-4\times2\times10^{-5}\times P_{br}$$

$$\text{or, } P_{br}=12000N$$

Therefore, the stress in the bronze rod,

$$\sigma_{br}=\frac{P_{br}}{A_{br}}=\frac{12000}{1000}=12MPa \text{ Answer}$$

Problem P1.65:

A rigid bar of negligible weight is suspended from two vertical rods as shown in Figure P1.65. The rigid bar is pinned at O and remains horizontal initially. Determine the temperature change if the stress developed in the steel rod is $12.7MPa$. Cross-sectional areas of steel and bronze rods are respectively $300mm^2$ and $1200mm^2$. Consider $E_{st}=200GPa$, $\alpha_{st}=11.7\mu m/m^{o}C$, $E_{br}=80GPa$ and $\alpha_{br}=18.9\mu m/m^{o}C$.

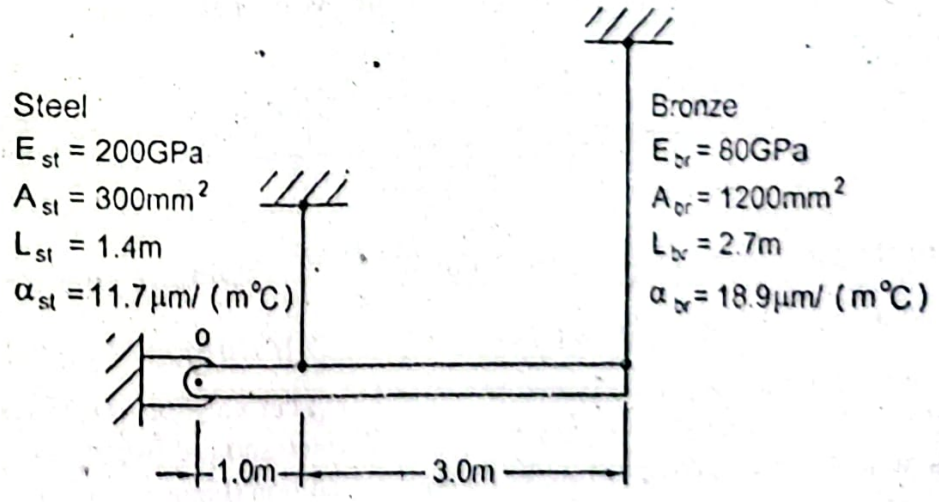

Figure P1.65

Given Data:

Cross-sectional area of steel rod, $A_{st} = 300mm^2$

Cross-sectional area of bronze rod, $A_{br} = 1200mm^2$

Length of steel rod, $L_{st} = 1.4m$

Length of bronze rod, $L_{br} = 2.7m$

Stress developed in steel rod, $\sigma_{st} = 12.7MPa$

Modulus of elasticity of steel, $E_{st} = 200GPa$

Modulus of elasticity of bronze, $E_{br} = 80GPa$

Coefficient of thermal expansion of steel, $\alpha_{st} = 11.7\mu m / m^0C$

Coefficient of thermal expansion of bronze, $\alpha_{br} = 18.9\mu m / m^0C$

To Find:

- Temperature change, ΔT

Solution:

Force in the steel rod due to stress developed,

$$P_{st} = \sigma_{st} \times A_{st} = 12.7 \times 300N = 3810N$$

Now from balance of moment about O,

$$P_{st} \times 1 = P_{br} \times 4$$

$$\text{or, } P_{br} = \frac{P_{st}}{4} = \frac{3810}{4} N = 952.5N$$

For these loads deformations in the steel and bronze rods are respectively,

$$\delta_{P_{st}} = \frac{P_{st} L_{st}}{A_{st} E_{st}} = \frac{3810 \times 1.4 \times 10^3}{300 \times 200 \times 10^3} = 0.0889mm$$

$$\delta_{P_{br}} = \frac{P_{br} L_{br}}{A_{br} E_{br}} = \frac{952.5 \times 2.7 \times 10^3}{1200 \times 80 \times 10^3} = 0.0268mm$$

Deformations due to temperature change in the steel and bronze rods are respectiv (Figure below),

$$\delta_{t_{st}} = \alpha_{st} L_{st} \Delta T = 11.7 \times 10^{-6} \times 1.4 \times 10^3 \Delta T = 0.0164 \Delta T mm$$

$$\delta_{t_{br}} = \alpha_{br} L_{br} \Delta T = 18.9 \times 10^{-6} \times 2.7 \times 10^3 \Delta T = 0.0510 \Delta T mm$$

Say that the temperature change causes contraction, that is, the rods are shortened.

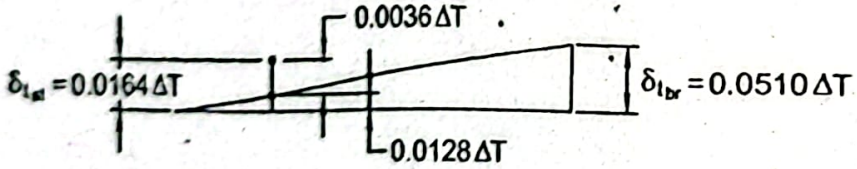

According to the problem for deformation up to $\frac{0.0510\Delta T}{4} = 0.0128\Delta T$, the steel rod not stressed. For the additional deformation $= (0.0164\Delta T - 0.0128\Delta T) = 0.0036\Delta T$ stress is developed in the steel rod. Therefore, considering deformation $0.0036\Delta T$ only the steel rod will be elongated by an amount of $0.0889mm$ and the bronze rod will b shortened by an amount of $0.0268mm$ in the balanced condition (Figure below).

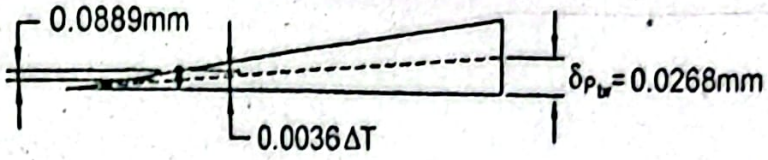

Now according to the problem from similar triangles in the above figure,

$$0.0036\Delta T = 0.0889 + \frac{0.0268}{4}$$

or, $\Delta T = 26.6^0 C$ *Answer*

Problem P1.66:

A solid steel cylinder is placed concentrically inside a hollow brass cylinder, each having the same length as shown in Figure P1.66. Cross-sectional area of steel cylinder is $1200mm^2$ and that of brass cylinder is $1800mm^2$. Determine the stress in each cylinder when a horizontal rigid slab of $50kN$ is placed upon them. Also determine the stress in each cylinder if the temperature increases by $30^0 C$ slab remaining horizontal. Consider $E_{st} = 200GPa$, $\alpha_{st} = 11.7\mu m / m^0 C$, $E_{br} = 100GPa$ and $\alpha_{br} = 18.7\mu m / m^0 C$.

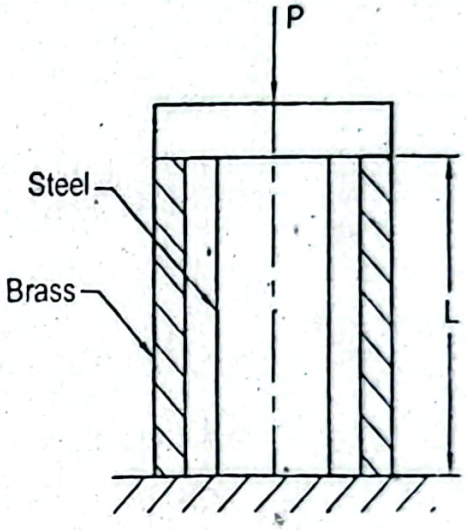

Figure P1.66

Given Data:

Cross-sectional area of steel cylinder, $A_{st} = 1200mm^2$

Cross-sectional area of brass cylinder, $A_{st} = 1800mm^2$

Load applied, $P = 50kN$

Temperature increase, $\Delta T = 30^0 C$

Modulus of elasticity of steel, $E_{st} = 200GPa$

Modulus of elasticity of brass, $E_{br} = 100GPa$

Coefficient of thermal expansion of steel, $\alpha_{st} = 11.7\mu m / m^0 C$

Coefficient of thermal expansion of brass, $\alpha_{br} = 18.7\mu m / m^0 C$

To Find:

Stress in steel and brass cylinders, σ_{st} and σ_{br}

Solution:

When the load $P = 50kN$ is applied only, having no change of temperatu deflections in both the steel and brass cylinders will be same. Therefore,

$$\delta_{st} = \delta_{br}$$

$$\text{or, } \frac{P_{st} L_{st}}{A_{st} E_{st}} = \frac{P_{br} L_{br}}{A_{br} E_{br}}$$

But we have, $L_{st} = L_{br} = L$

Therefore, $$\frac{P_{st}}{1200 \times 200 \times 10^3} = \frac{P_{br}}{1800 \times 100 \times 10^3}$$

$$\text{or, } P_{st} = 1.33 P_{br}$$

From the force balance,

$$P = P_{st} + P_{br}$$

$$\text{or, } P = 1.33 P_{br} + P_{br}$$

$$\text{or, } P_{br} = \frac{P}{2.33} = \frac{50}{2.33} kN = 21.46kN$$

$$\text{and, } P_{st} = 28.54kN$$

Stress in the brass cylinder,

$$\sigma_{br} = \frac{P_{br}}{A_{br}} = \frac{21.46 \times 10^3}{1800} MPa = 11.92MPa \text{ (Compression) } \textbf{\textit{Answer}}$$

Stress in the steel cylinder,

$$\sigma_{st} = \frac{P_{st}}{A_{st}} = \frac{28.54 \times 10^3}{1200} MPa = 23.78MPa \text{ (Compression) } \textbf{\textit{Answer}}$$

The following figure shows the deflections due to increase of temperature.

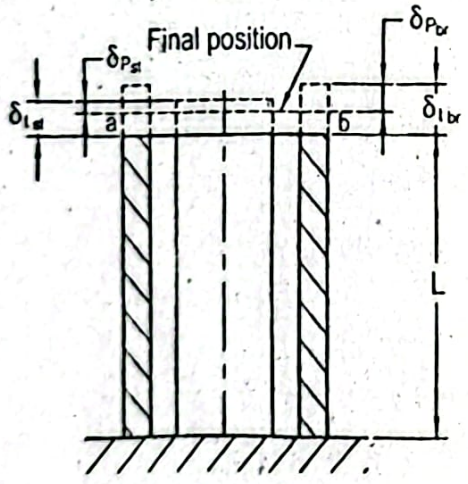

The final position of the slab reaches at a-b. Therefore, we find a relation as,

$$\delta_{t_{br}} - \delta P_{br} = \delta_{t_{st}} - \delta_{P_{st}}$$

$$\text{or, } \left(\delta_{t_{br}} - \delta_{t_{st}}\right) = \delta P_{br} - \delta_{P_{st}}$$

$$\text{or, } \alpha_{br} L \Delta T - \alpha_{st} L \Delta T = \frac{P_{br} L}{A_{br} E_{br}} - \frac{P_{st} L}{A_{st} E_{st}}$$

or, $\frac{P_{br}}{1800\times100\times10^{-3}} - \frac{P_{st}}{1200\times200\times10^{-3}}$ $\times 30 =$ [illegible]

or, $50400 = 1.33P_{br} - P_{st}$ (i)

But we have from the force balance,

$$p = P_{br} + P_{st}$$

or, $50000 = P_{br} + P_{st}$ (ii)

From Equations (i) and (ii),

$$50000 = P_{br} + (1.33P_{br} - 50400)$$

or, $P_{br} = 43090.13N$

Therefore, $P_{st} = 6909.87N$

Stress in the brass cylinder,

$$\sigma_{br} = \frac{P_{br}}{A_{br}} = \frac{21.46\times10^{3}}{1800} = \frac{43090.13}{1800} = 23.94MPa \text{ (Compression) } \textit{Answer}$$

Stress in the steel cylinder,

$$\sigma_{st} = \frac{P_{st}}{A_{st}} = \frac{28.5\times10^{3}}{1200} = \frac{6909.87}{1200} = 5.76MPa \text{ (Compression) } \textit{Answer}$$

Problem P1.67:

A vertical load of $5kN$ is suspended from three vertical wires side by side at 15^0C as shown in Figure P1.67. The unstretched length of each wire is $5m$ and cross-sectional area of each wire is $125mm^2$. The middle wire is made of steel and the outer wires are made of copper. All the wires are at equidistance from each other. (a) Determine the load carried by each wire, if the load is applied gradually; (b) Determine the final temperature so that the entire load is carried by the steel wire only. Consider $E_{st} = 200GPa$. $\alpha_{st} = 11.7\mu m/m^0C$, $E_{cu} = 120GPa$ and $\alpha_{cu} = 16.8\mu m/m^0C$.

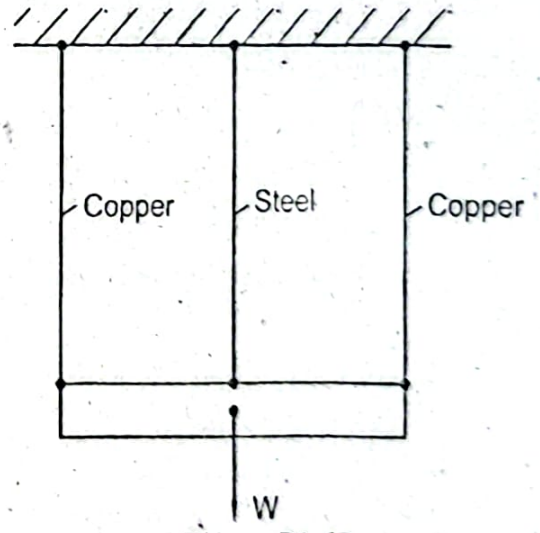

Figure P1.67

Given Data:

Vertical load, $W = 5kN$

Initial temperature, $t_i = 15^0C$

Cross-sectional area of steel wire, $A_{st} = 125mm^2$

Cross-sectional area of copper wire, $A_{cu} = 125mm^2$

Length of steel wire, $L_{st} = 5m$

Length of copper wire, $L_{cu} = 5m$

Modulus of elasticity of steel wire, $E_{st} = 200GPa$

Modulus of elasticity of copper wire, $E_{cu} = 120GPa$

Coefficient of thermal expansion of steel, $\alpha_{st} = 11.7\mu m / m^0C$

Coefficient of thermal expansion of copper, $\alpha_{cu} = 16.8\mu m / m^0C$

To Find:

- Load carried by each wire, P_{st} and P_{cu}
- Final temperature, t_f

Solution:

(a) Deflection in each wire will be same, since the load has been suspended by the wi symmetrically. Therefore, $\delta_{cu} = \delta_{st}$

$$\text{or, } \frac{P_{cu}L_{cu}}{A_{cu}E_{cu}} = \frac{P_{st}L_{st}}{A_{st}E_{st}}$$

$$\text{or, } \frac{P_{cu} \times 5 \times 10^3}{125 \times 120 \times 10^3} = \frac{P_{st} \times 5 \times 10^3}{125 \times 200 \times 10^3}$$

$$\text{or, } P_{cu} = 0.6P_{st} \qquad (i$$

From the force balance in the vertical direction,

$$+\uparrow \sum F_y = 0$$

$$\text{or, } W = P_{cu} + P_{st} + P_{cu} = 2P_{cu} + P_{st}$$

$$\text{or, } 2P_{cu} + P_{st} = 5 \times 10^3$$

Substituting the value of P_{cu} in Equation(i),

$$2 \times 0.6P_{st} + P_{st} = 5 \times 10^3$$

$$\text{or, } P_{st} = 2273N \text{ Answer}$$

Therefore, $P_{cu} = 1364N$ *Answer*

(b) When the entire load is carried by the steel wire only, deflection is given by,

$$\delta_{st_p} = \frac{PL_{st}}{A_{st}E_{st}}$$

$$= \frac{5 \times 10^3 \times 5 \times 10^3}{125 \times 200 \times 10^3}$$

$$= 1.0mm$$

Deflection in the steel wire due to temperature change,

$$\delta_{st_t} = \alpha_{st}L_{st}\Delta T$$

$$= 11.7 \times 10^{-6} \times 5 \times 10^3 \times \Delta T$$

$$= 5.85 \times 10^{-2} \Delta T \, mm$$

to the temperature change only. As a result deflection,

$$\delta_{cu_t} = \alpha_{cu} L_{cu} \Delta T$$
$$= 16.8 \times 10^{-6} \times 5 \times 10^{1} \Delta T$$
$$= 8.40 \times 10^{-2} \Delta T \, mm$$

Now according to the problem, a relation of deflections is obtained as,

$$\delta_{cu_t} = \delta_{st_t} + \delta_{st_p}$$

or, $8.4 \times 10^{-2} \Delta T = 5.85 \times 10^{-2} \Delta T + 1$

or, $\Delta T = 39.22^0 C$

Therefore, $t_f - t_i = 39.22$

or, $t_f = 39.22 + 15^0$

or, $t_f = 54.22^0 C$ *Answer*

Problem P1.68:

A composite bar made of aluminum and steel is firmly attached to the rigid walls at $15^0 C$ as shown in Figure P1.68. Cross-sectional areas of the aluminum and steel portions are respectively $1200mm^2$ and $1800mm^2$. Determine the stresses in each material at $50^0 C$, if the axial load $P = 225kN$. Consider $E_{st} = 200GPa$, $\alpha_{st} = 11.7\mu m / m^0 C$, $E_{al} = 70GPa$ and $\alpha_{al} = 23.1\mu m / m^0 C$.

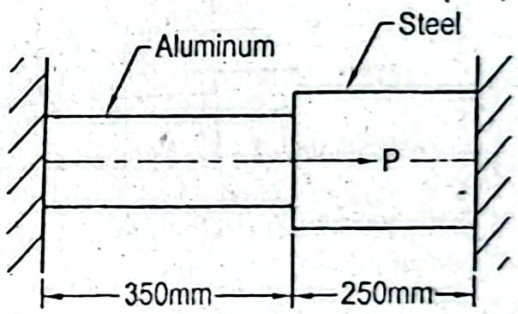

Figure P1.68

Given Data:

Axial load, $P = 225kN$

Cross-sectional area of aluminum portion, $A_{al} = 1200mm^2$

Cross-sectional area of steel portion, $A_{st} = 1800mm^2$

Initial temperature, $t_i = 15^0 C$

Final temperature, $t_f = 50^0 C$

Modulus of elasticity of steel, $E_{st} = 200GPa$

Modulus of elasticity of aluminum, $E_{al} = 70GPa$

Coefficient of thermal expansion of steel, $\alpha_{st} = 11.7\mu m / m^0 C$

Coefficient of thermal expansion of aluminum, $\alpha_{al} = 23.1\mu m / m^0 C$

Length in aluminum portion, $L_{al} = 350mm$

Length in steel portion, $L_{st} = 250mm$

To Find:

- Stress in aluminum, σ_{al}
- Stress in steel, σ_{st}

Solution:

Free deflection in both the aluminum and steel portions due to temperature change,

$$\delta_t = \alpha_{al} L_{al} \Delta T + \alpha_{st} L_{st} \Delta T$$

$$= 23.1\times10^{-6}\times350\times(50-15)+11.7\times10^{-6}\times250\times(50-15$$

$$= 0.3854mm$$

Free deflection due to the axial force P which will occur in the aluminum portion onl

$$\delta_P = \frac{PL_{al}}{A_{al}E_{al}} = \frac{225\times10^3\times350}{1200\times70\times10^3}mm = 0.9375mm$$

Therefore, the total free deflection due to change of temperature and the axial l (Figure below), $\delta = \delta_t + \delta_P$

$$= (0.3854+0.9375)mm$$

$$= 1.3229mm$$

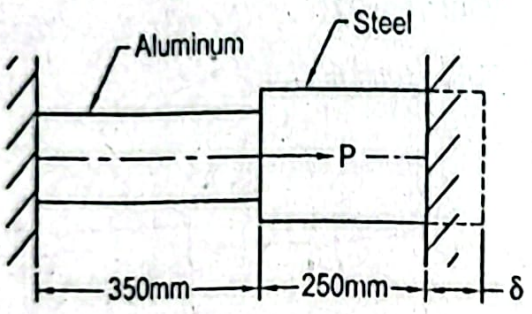

The rigid wall will resist this amount of deflection; as a result a reaction on the rigid w will be developed (Figure below). Let this reaction is R_2 at the right wall and R_1 at t left wall. The following figure shows the free body diagram of the entire bar.

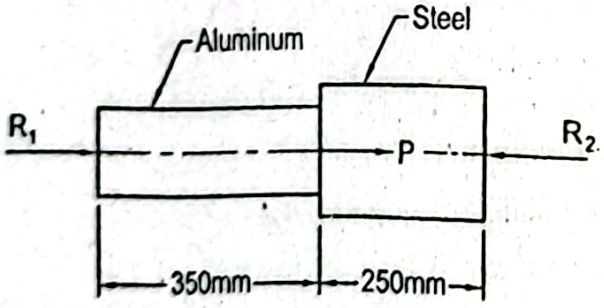

Total deflection can be obtained as,

$$\delta = \frac{R_2 L_{st}}{A_{st}E_{st}} + \frac{R_2 L_{al}}{A_{al}E_{al}}$$

$$\text{or, } 1.3229 = \frac{R_2\times250}{1800\times200\times10^3} + \frac{R_2\times350}{1200\times70\times10^3}$$

$$\text{or, } R_2 = 272.14kN$$

$$+\rightarrow \sum F_x = 0: \qquad R_1 + P - R_2 = 0$$

or, $R_1 = R_2 - P = (272.14 - 225)kN$

$= 47.14kN$

Therefore, the stress in the steel portion,

$$\sigma_{st} = \frac{R_2}{A_{st}} = \frac{272.14\times10^3}{1800} MPa = 151.19MPa \text{ (Compression) } \textit{Answer}$$

and the stress in the aluminum portion,

$$\sigma_{al} = \frac{R_1}{A_{al}} = \frac{47.14\times10^3}{1200} MPa = 39.28MPa \text{ (Compression) } \textit{Answer}$$

Problem P1.69:

There is a steel bolt of diameter $50mm$ inside a copper tube of internal diameter of $53mm$ and length of $300mm$ as shown in Figure P1.69. Cross-sectional area of the copper tube is $2000mm^2$. The bolt is tightened in such a way that the copper tube remains between the bolt head and the nut in the close fit condition, when the temperature of the bolt and tube is 10^0C. Determine the stress in the copper tube when the bolt and copper tube are heated to 60^0C. Consider $E_{st} = 200GPa$, $\alpha_{st} = 11.7\mu m/m^0C$, $E_{cu} = 120GPa$ and $\alpha_{cu} = 16.8\mu m/m^0C$.

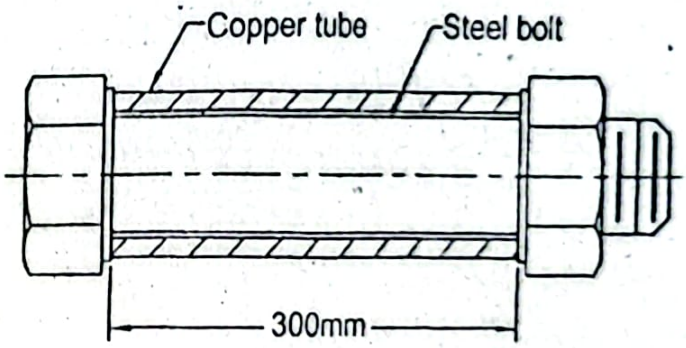

Figure P1.69

Given Data:

Internal diameter of copper tube, $d_{i_{cu}} = 53mm$

Length of copper tube, $L_{cu} = 300mm$

Diameter of steel bolt, $d_{st} = 50mm$

Cross-sectional area of copper tube, $A_{cu} = 2000mm^2$

Initial temperature, $t_i = 10^0C$

Final temperature, $t_f = 60^0C$

Modulus of elasticity of steel, $E_{st} = 200GPa$

Modulus of elasticity of copper, $E_{cu} = 120GPa$

Coefficient of thermal expansion of steel, $\alpha_{st} = 11.7\mu m/m^0C$

Coefficient of thermal expansion of copper, $\alpha_{cu} = 16.8\mu m/m^0C$

To Find:

- Stress in copper tube, σ_{cu}

Solution:

Increase in the length of the copper tube due to temperature change,

$$\delta_{t_{cu}} = \alpha_{cu} \times L_{cu} \times \Delta T$$

$$= 16.8 \times 10^{-6} \times 300 \times (60 - 10)\,mm = 0.252\,mm$$

Increase in the length of the steel bolt due to temperature change,

$$\delta_{t_{st}} = \alpha_{st} \times L_{st} \times \Delta T$$

$$= 11.7 \times 10^{-6} \times 300 \times (60 - 10)\,mm = 0.1755\,mm$$

Therefore, the excess increase in the length of the copper tube,

$$= \delta_{t_{cu}} - \delta_{t_{st}}$$

$$= (0.252 - 0.1755)\,mm = 0.0765\,mm$$

Due to this action, the bolt will be elongated by $\delta_{P_{st}}$ and the copper tube shortened by $\delta_{P_{cu}}$ as shown in the figure below. As a result we may find a relation a

$$|\delta_{P_{st}}| + |\delta_{P_{cu}}| = 0.0765$$

$$\text{or, } \left|\frac{PL_{st}}{A_{st}E_{st}}\right| + \left|\frac{PL_{cu}}{A_{cu}E_{cu}}\right| = 0.0765$$

Since in the balanced condition,

$$P_{st} = P_{cu} = P$$

Therefore,

$$\frac{P \times 300}{\left(\frac{\pi \times 50^2}{4}\right) \times 200 \times 10^3} + \frac{P \times 300}{2000 \times 120 \times 10^3} = 0.0765$$

$$\text{or, } P = 37985.17\,N$$

Now, the stress in the copper tube,

$$\sigma_{cu} = \frac{P}{A_{cu}} = \frac{37985.17}{2000}\,MPa = 18.99\,MPa \quad \textit{Answer}$$

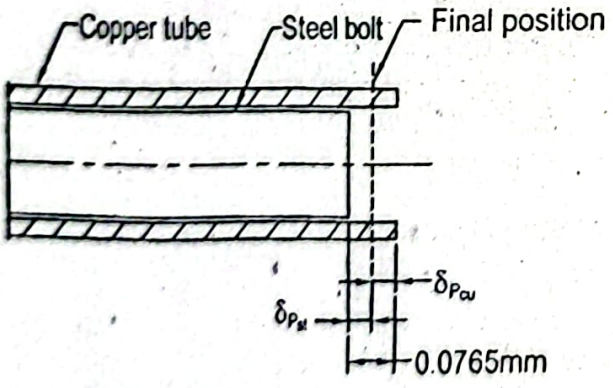

Problem P1.70:

A mass *m* of *20tons* is suspended from four inclined steel bars as shown in Figure P1.7 Cross-sectional area of each bar is $500mm^2$. Determine the stress in each bar for temperature rise of 60^0C. Consider $E_{st} = 200GPa$ and $\alpha_{st} = 11.7\mu m / m^0C$.

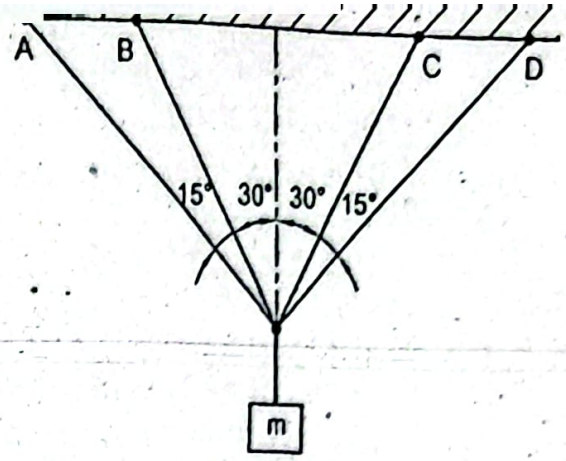

Figure P1.70

Given Data:

Mass, $m = 20ton$

Cross-sectional area of each bar, $A = 500mm^2$

Temperature rise, $\Delta T = 60^0 C$

Modulus of elasticity of steel, $E_{st} = 200GPa$

Coefficient of thermal expansion of steel, $\alpha_{st} = 11.7\mu m / m^0 C$

To Find:

- Stresses in bar A and D, σ_A, σ_D
- Stresses in bar B and C, σ_B, σ_C

Solution:

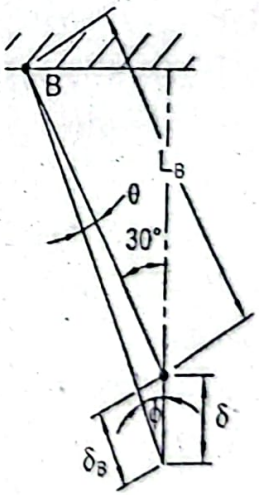

When θ is small (Figure above), the angle ϕ approaches 30^0, therefore, $\phi = 30^0$

$$\delta_B = \delta \cos 30^0$$

$$\text{or, } \delta = 1.1547\delta_B \qquad (i)$$

Similarly,

$$\delta \cos 45^0 = \delta_A$$

$$\text{or, } \delta = 1.4142\delta_A \qquad (ii)$$

From Equations (i) and (ii) we have,

$$1.1547\delta_B = 1.4142\delta_A$$

$$\text{or, } \delta_B = 1.2248\delta_A \qquad (iii)$$

We also have, $L_A \cos 45^0 = L_B \cos 30^0$

or, $L_A = 1.2247 L_B$

If δ_A is the total deformation in the bar A due to temperature change and the load, th

$$\delta_A = \frac{P_A L_A}{A E_{st}} + \alpha_{st} L_A \Delta T$$

$$= \frac{P_A L_A}{500 \times 200 \times 10^3} + 11.7 \times 10^{-6} \times L_A \times 60$$

$$= 1.0 \times 10^{-8} P_A L_A + 7.02 \times 10^{-4} L_A$$

Substituting the value of L_A from Equation (iv),

$$\delta_A = 1.2247 \times 10^{-8} P_A L_B + 8.6 \times 10^{-4} L_B$$

Again, the total deformation δ_B in the bar B,

$$\delta_B = \frac{P_B L_B}{A E_{st}} + \alpha_{st} L_B \Delta T$$

$$= \frac{P_B L_B}{500 \times 10^{-8}} + 11.7 \times 10^{-6} L_B \times 60$$

$$= 1.0 \times 10^{-8} P_B L_B + 7.02 \times 10^{-4} L_B$$

Now from Equations (iii), (v) and (vi),

$$1.0 \times 10^{-8} P_B L_B + 7.02 \times 10^{-4} L_B = 1.2248\left(1.2247 \times 10^{-8} P_A L_B + 8.6 \times 10^{-4} L_B\right)$$

or, $P_B = 1.5 P_A + 3.513 \times 10^4$ (v

We also have from the force balance,

$$2P_A \cos 45^0 + 2P_B \cos 30^0 = 20000 \times 9.81$$

or, $P_B = -0.8165 P_A + 113276.12$ (vi

Now from Equations (vii) and $(viii)$,

$$-0.8165 P_A + 113276.12 = 1.5 P_A + 3.513 \times 10^4$$

or, $P_A = 33.74 kN$

Substituting this value in Equation $(viii)$,

$$P_B = 85.73 kN$$

Therefore, the stresses in the bar A or D,

$$\sigma_A = \sigma_D = \frac{P_A}{A} = \frac{33.74 \times 10^3}{500} MPa = 171.46 MPa \quad Answ$$

Stress in bar B or C, $\sigma_B = \sigma_C = \frac{P_B}{A} = \frac{85.73 \times 10^3}{500} MPa = 171.46 MPa \quad Answ$

Problem P1.71:

A $200mm$ long vertical steel rod is to resist an impact weight of $200kg$, which fal freely from a height of $60mm$ on a stop. The stop is securely fixed at the lower end of th rod. What should be the diameter of the rod if the maximum stress develops in the rod i $140MPa$? Modulus of elasticity of steel, $E = 200GPa$.

Given Data:
Length of rod, $L = 200mm$
Weight, $W = 200kg$
Height, $h = 60mm$
Maximum stress, $\sigma = 140MPa$
Modulus of elasticity of steel, $E_s = 200GPa$

To Find:
- Diameter of rod, d

Solution:
Load, $P = 200 \times 9.81\ N$
We have an expression of stress as,

$$\sigma = \frac{P}{A}\left(1+\sqrt{1+\frac{2AEh}{PL}}\right)$$

$$\text{or, } 140 = \frac{1962}{A}\left(1+\sqrt{1+\frac{2\times A\times 200\times 10^3\times 60}{1962\times 200}}\right)$$

By trial and error method, we find, $A = 12040mm^2$

$$\text{or, } \frac{\pi d^2}{4} = 12040$$

$$\text{or, } d = 123.8mm$$ ***Answer***

Problem P1.72:
A $2.0m$ long vertical steel bar of $100mm$ diameter has a collar securely fixed at its bottom end. If a weight of $150kg$ drops freely on the collar and a maximum stress of $100MPa$ develops in the bar, determine the height of drop. Modulus of elasticity of steel, $E = 200GPa$.

Given Data:
Length of rod, $L = 2.0m$
Weight, $W = 150kg$
Diameter, $d = 100mm$
Maximum stress, $\sigma = 100MPa$
Modulus of elasticity of steel, $E_s = 200GPa$

To Find:
- Height of drop, h

Solution:
Load, $P = 150 \times 9.81 = 1471.5\ N$

Cross-sectional area, $A = \frac{\pi d^d}{4} = \frac{\pi \times 100^2}{4} = 7853.98mm^2$

We have an expression of stress as,

$$\sigma = \frac{P}{A}\left(1+\sqrt{1+\frac{2AEh}{PL}}\right)$$

$$\text{or, } 100 = \frac{1471.5}{7853.98}\left(1+\sqrt{1+\frac{2\times 7853.98\times 200\times 10^3\times h}{1471.5\times 2.0\times 10^3}}\right.$$

By trial and error method, we obtain,

$$h = 267mm \text{ Answer}$$

EXERCISES

Problem E1.1:

Determine inside and outside diameters of a $0.5m$ long hollow steel pipe, which supp an axial load of $250kN$. Also find the deformation of this pipe due to this l Allowable stress for steel in compression is $120MPa$. Outside diameter d_o of the pip twice the inside diameter d_i. Consider $E_{st} = 200GPa$.

Ans.: $d_o = 59.5mm$; $d_i = 29.7mm$; $\delta = 0.3$

Problem E1.2:

Find cross-sectional areas of the members AB, BD, AC, DC and EB in the cantile truss as shown in Figure E1.2. Allowable stress in tension or compression is $120MPa$.

Ans.: $A_{AB} = A_{BD} = 666.67mm^2$; $A_{AC} = A_{DC} = 577.33mm^2$; $A_{EB} = 1154.67$

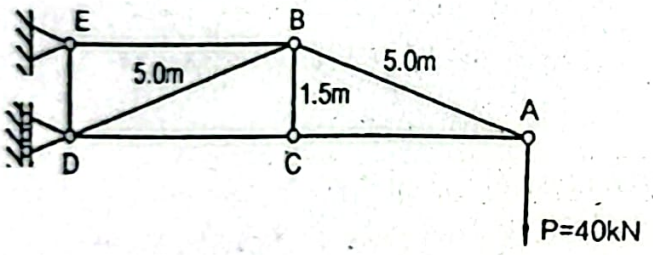

Figure: E1.2

Problem E1.3:

A composite round bar fabricated from steel and brass bars of diameter $d = 40mm$ i subjected to an axial load $P = 50kN$ as shown in Figure E1.3. Determine the lengths i the steel portion L_{st} and brass portion L_{br} such that elongations in both the steel and brass portions are equal. Also determine the total elongation δ. Consider $E_{st} = 200GPa$ and $E_{br} = 100GPa$.

Ans.: $L_{st} = 100mm$; $L_{br} = 50mm$; $\delta = 0.04mm$

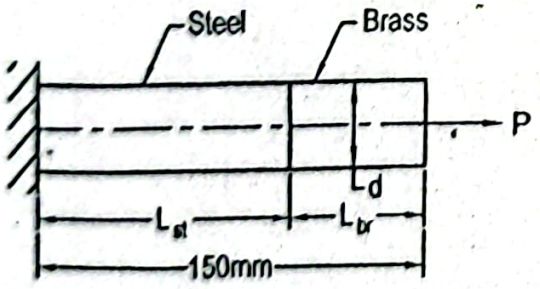

Figure: E1.3

Problem...

A vertical load $P = 30kN$ is supported by two steel rods AB and BC as shown in Figure E1.4. Determine the vertical and horizontal displacement of the point B. Consider $E_{st} = 200GPa$.

Ans.: $\delta_{B_v} = 10.87mm$; $\delta_{B_h} = 2.81mm$

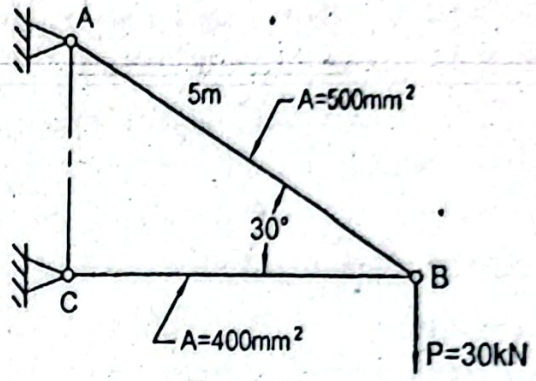

Figure: E1.4

Problem E1.5:

One thin walled cylindrical pressure vessel is made of steel of wall thickness $5mm$ and another one is made of aluminum having the same internal diameter to that of the steel cylinder. If both of them contain the same internal fluid pressure and the ratio of tangential stress developed in the steel and aluminum cylinders is 1.20, determine the wall thickness of the aluminum cylinder.

Ans.: $6mm$

Problem E1.6:

A riveted joint as shown in Figure E1.6 is subjected to an axial load $P = 50kN$. If the thickness of the plate $t = 6mm$, determine the rivet size d, plate width b and bearing stress σ_c due to this load. Allowable stresses in shear and tension are respectively $85MPa$ and $140MPa$.

Ans.: $d = 15.80mm$; $b = 91.12mm$; $\sigma_c = 175.81MPa$

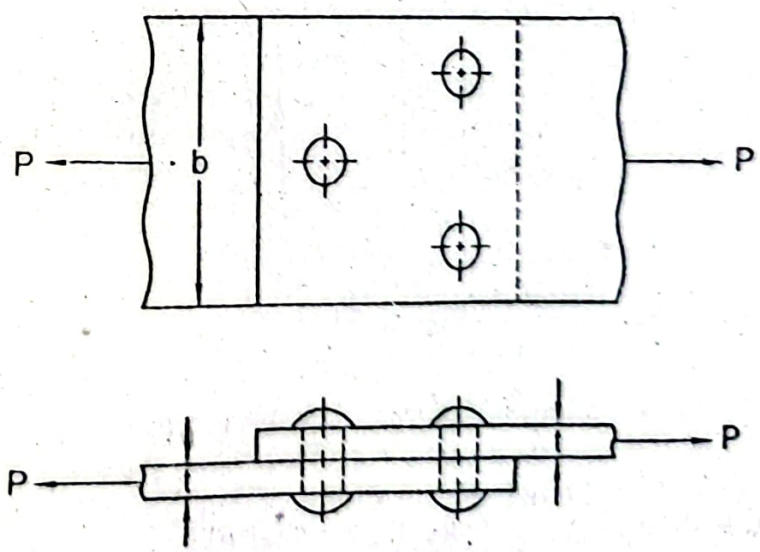

Figure: E1.6

Problem E1.7:

A rigid bar AB of negligible weight is suspended by an aluminum alloy rod of diam 20*mm* and a steel rod of diameter 15*mm* as shown in Figure E1.7. The lengths of aluminum alloy rod and steel rod are respectively 1.0*m* and 1.5*m*. If the vertical l $P = 25kN$ and the bar remains horizontal after application of the load, determine stresses in aluminum alloy rod σ_{al}, steel rod σ_{st} and the distance a. Cons $E_{st} = 200GPa$ and $E_{al} = 71GPa$.

Ans.: $\sigma_{al} = 38.70MPa$, $\sigma_{st} = 72.67MPa$; $a = 1.28$

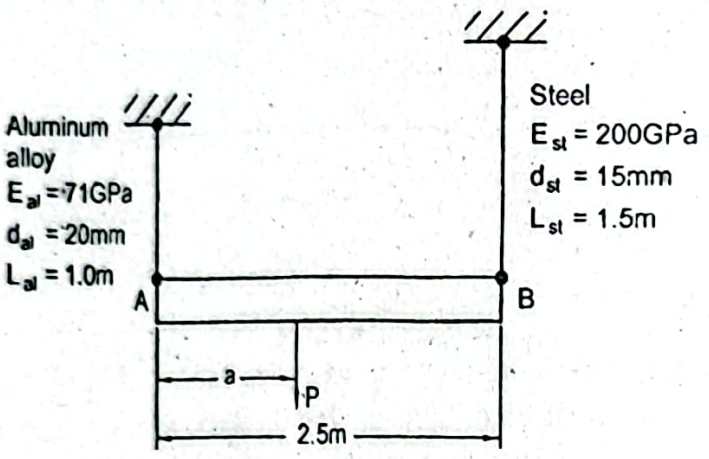

Figure: E1.7

Problem E1.8:

A rigid bar of negligible mass is subjected to a vertical load P at its end as shown Figure E1.8. The bar is pinned at O and attached with a steel rod and an aluminum al rod. The rods were stress free before application of the load. Cross-sectional areas of steel and aluminum alloy rods are respectively $800mm^2$ and $400mm^2$. If the allowa stresses of the steel and aluminum alloy are respectively 110*MPa* and 85MPa, determ the maximum load P that can be supported. Consider $E_{st} = 200GPa$ and $E_{al} = 71GPa$

Ans.: $P = 150.5k$

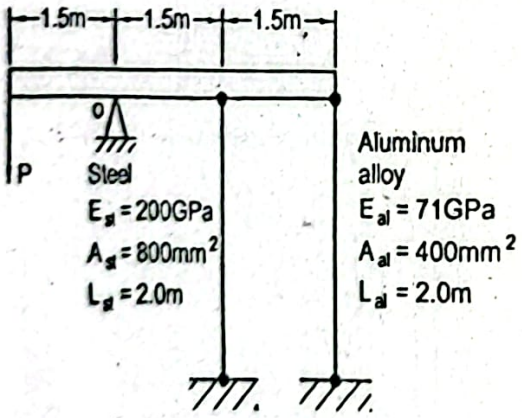

Figure: E1.8

Problem E1.9:

A steel rod of cross-sectional area $2000mm^2$ is subjected to an axial load of 200k Before application of the load, there was a gap $\delta = 0.3mm$ between the end of the r and the plane rigid wall as shown in Figure E1.9. Determine the stresses in the portio AB and BC when the load is applied. Consider $E_{st} = 200GPa$.

Ans.: $\sigma_{AB} = 53.34MPa$ (tension); $\sigma_{BC} = 46.67MPa$ (compressio

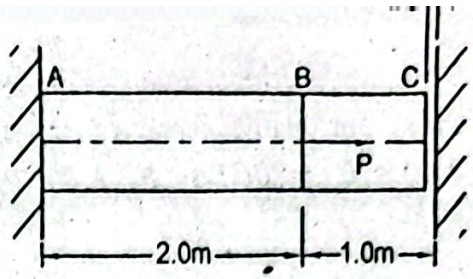

Figure: E1.9

Problem E1.10:

A composite bar of uniform cross-section is firmly attached to one end of a rigid wall and there is a gap of $0.4mm$ between the other end and the rigid wall plane as shown in Figure E1.10. The initial temperature is -15^0C. If the temperature is raised to 85^0C, determine the stress in the bar at this state. Consider $E_{st} = 200GPa$, $\alpha_{st} = 11.7\mu m/m^0C$ $E_{cu} = 120GPa$ and $\alpha_{cu} = 16.8\mu m/m^0C$.

Ans.: $\sigma = 63.75MPa$ (compression)

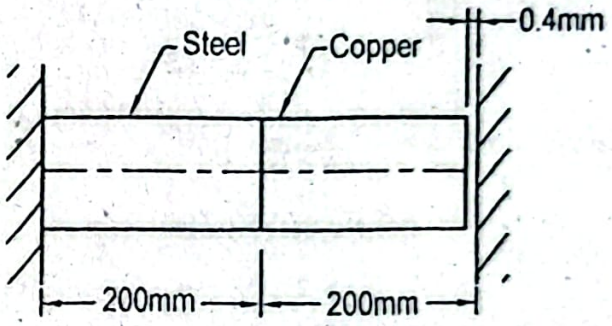

Figure: E1.10

Problem E1.11:

A rigid beam of negligible weight pinned supported at O is suspended horizontally from two steel hangers each of cross-sectional area $4000mm^2$ as shown in Figure E1.11. Determine the stress in each hanger when temperature decreases by 30^0C. Consider $E_{st} = 200GPa$ and $\alpha_{st} = 11.7\mu m/m^0C$.

Ans.: $\sigma_A = 66.11MPa$ (tensile); $\sigma_B = 76.34MPa$ (tensile)

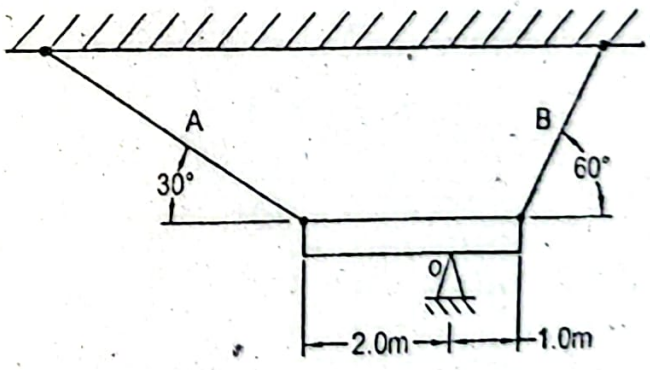

Figure: E1.11

Problem E1.12:

A rigid horizontal bar of negligible weight is hinged at O and attached to two rods as shown in Figure E1.12. The rods were initially stress-free. If the tensile stress in the aluminum rod due to temperature change is $100MPa$, determine the change of

temperature in both the rods. Cross-sectional area and the length of the aluminum rod respectively $1200mm^2$ and $3.5m$ while those of the bronze rod are respectiv $1000mm^2$ and $2.5m$. Consider $E_{al} = 70GPa$, $E_{br} = 80GPa$. $\alpha_{al} = 23.1\mu m/m^0C$ $\alpha_{br} = 18.0\mu m/m^0C$.

Ans.: 59.3

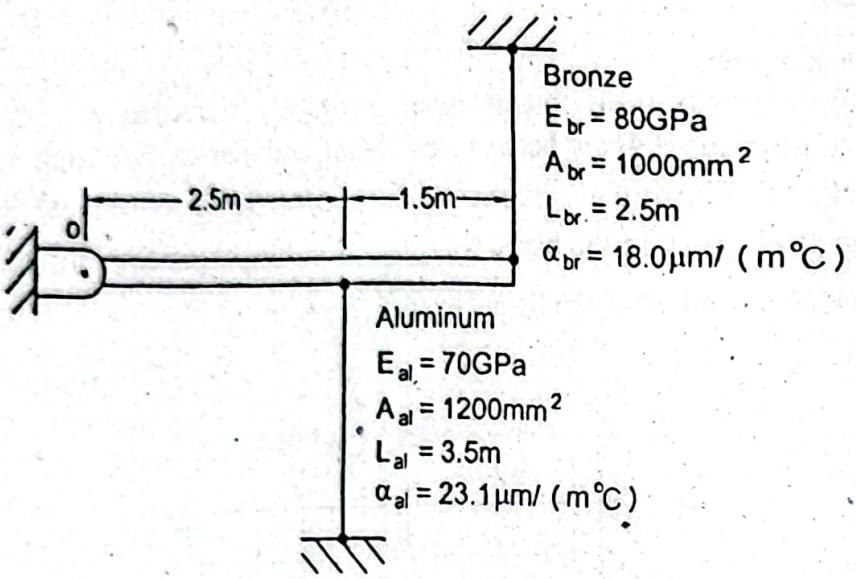

Figure: E1.12

Problem E1.13:

A $2.5m$ long circular steel member of $300mm$ diameter hangs vertically. It has a coll securely fixed at its lower end. If a weight of $400kg$ falls freely on the collar from height of $200mm$, determine the maximum stress that develops in the member. Modul of elasticity of steel, $E = 200GPa$.

Ans.: 42.2MPa

Chapter II
Torsion

Question 2.1: Write necessary assumptions for derivation of torsion formula for a circular member.

Answer:

To derive the torsion formula the following assumptions are to be made:

(a) The material is homogeneous throughout.

(b) A plane section perpendicular to the axis of a circular member remains plane after the application of the torque.

(c) The twist is uniform along the length.

(d) The shearing strain varies linearly with the distance from the central axis of the circular member.

(e) The shearing stress is proportional to the shearing strain, that is, Hooke's law is followed.

Question 2.2: Derive an expression of torsion formula for a circular shaft.

Answer:

A circular shaft AD fixed at the end A is subjected to a torque T. Here the torque has been produced due to the application of a load P at the end of a lever at a distance of l from the axis of the shaft as shown in Figure 2.1. Therefore,

$$T = P \times l \qquad (2.1)$$

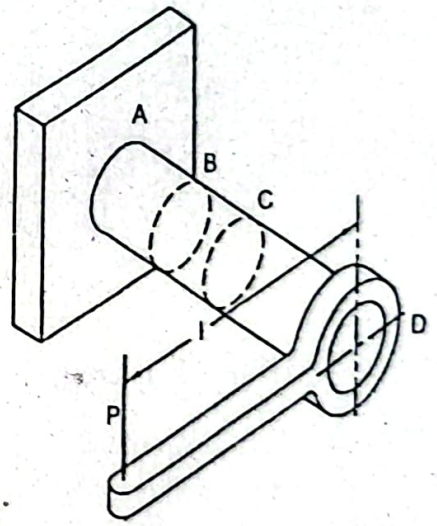

Figure 2.1: A Circular Shaft Subjected to Torque.

Now let us imagine a plane perpendicular to the axis of the shaft that cuts the shaft at B. The free body diagram of the portion of the shaft BD is shown in Figure 2.2. At the section D of the shaft, the torque is external while a resisting torque is developed at the section B. In the static equilibrium condition, since $\Sigma T = 0$, therefore,

Resisting torque = External torque

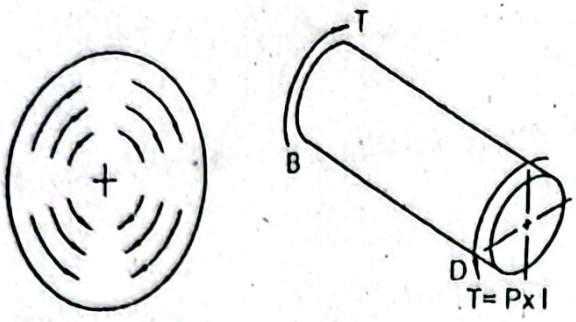

Torque T is due to shearing stresses at section B

Figure 2.2: Free Body Diagram of Shaft Portion BD.

The resisting torque T at the section B is generated from the force due to the shear stresses developed at that section. Now a portion of the shaft BC between two para planes is considered as shown in Figure 2.3 and this is under the uniform twist. Due the application of the torque deformation occurs, as a result the plane $MNOP$ moves to new position $MNOP'$. Here the plane at B remains fixed and the plane at C moves w respect to the plane at B. The plane section remains plane after the application of torque as shown in the Figure. In the section C, the fiber OP rotates to its new posit OP' and remains straight. This phenomenon of plane remaining plane and line remain straight after deformation indicates that there is a linear variation of the shearing str from the axis of the shaft.

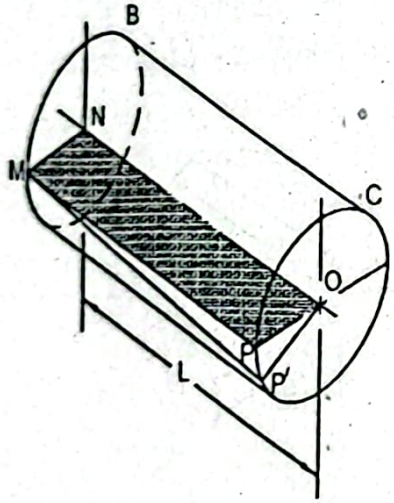

Figure 2.3: Shaft Portion BC is under Uniform Twist.

Figure 2.4 shows any section of the shaft where there is a linear variation of the shearin stress. It occurs due to the linear variation of the strain with the distance from the axis the center, since the stress is proportional to the strain. The resisting torque on this cros section will be equal to the external torque T in the static equilibrium condition. If th *shearing stress* at the outer surface is τ_{max}, then the shearing stress τ at any radius becomes,

$$\tau = \left(\frac{r}{c}\right)\tau_{max} \qquad (2.2$$

where, c is the distance from the center of the shaft to the outer fiber (i.e. radius). The force exerted on the elemental area dA is expressed as,

$$dP = \tau dA$$

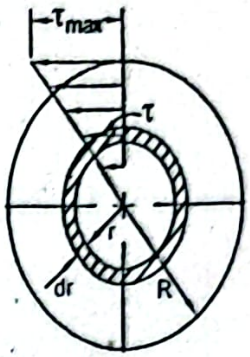

Figure 2.4: Cross-section of a Shaft Showing Linear Variation of Shearing Stress.

Substituting the value of τ from Equation (2.2) one obtains,

$$dP = \tau dA = \left(\frac{r}{c}\right)\tau_{max} dA$$

The moment of this force with respect to the axis of the shaft,

$$dT = r \times dP = \left(\frac{r^2}{c}\right)\tau_{max} dA \qquad (2.3)$$

Therefore, the total moment or torque on the entire cross-section becomes,

$$T = \frac{\tau_{max}}{c}\int_0^R r^2 dA = \frac{\tau_{max}}{c} J \qquad (2.4)$$

where, $J = \int_0^R r^2 dA$ is the polar moment of inertia of the cross-section. From Equation (2.4) the expression of the maximum shearing stress on the surface of the shaft becomes,

$$\tau_{max} = \frac{Tc}{J} \qquad (2.5)$$

Question 2.3: Deduce an expression of angle of twist for a circular member.

Answer:

A segment BC of a shaft of length L is taken into consideration which is subjected to a uniform torsional load as shown in Figure 2.5. Due to this load, deformation occurs and the plane $MNOP$ moves to its new position $MNOP'$ and the plane $MNOP'$ remains plane after deformation. The plane at the section B is assumed to be fixed and with respect to this, the plane at the section C rotates to its new position. The straight fiber OP moves to its new position OP' and remains straight after deformation. The angle between OP and OP' is called the *angle of twist* and is denoted by ϕ. The maximum shearing strain, γ_{max} occurs on the outer surface of the member as shown in the figure.

The arc PP' is obtained as,

$$PP' = c\varphi \qquad (2.6)$$

Again arc PP' can also be found as,

$$\gamma_{max} = \frac{PP'}{L}$$

From Equations (2.6) and (2.7) one can find,

$$\phi = \frac{\gamma_{max} L}{c}$$

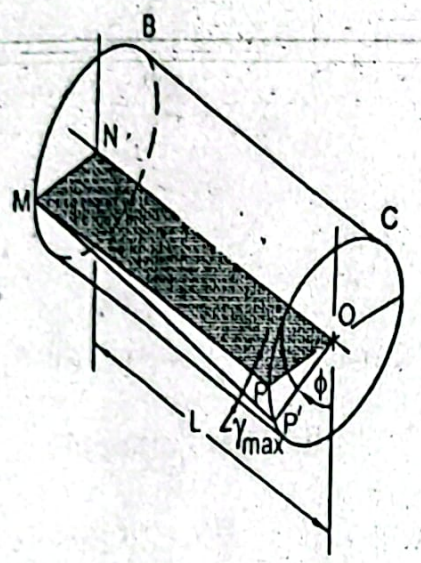

Figure 2.5: Twisting of Segment of a Circular Member.

On the surface of the circular member shearing stress τ_{max} and shearing strain γ_{max} maximum. Based on these stress and strain, modulus of rigidity G can be obtained wit the proportional limit as,

$$G = \frac{\tau_{max}}{\gamma_{max}}$$

Now from Equations (2.5) and (2.9) one can find,

$$\gamma_{max} = \frac{Tc}{GJ}$$

Substituting this value in Equation (2.8) the expression of the angle of twist becomes,

$$\phi = \frac{TL}{GJ}$$

Question 2.4: What do you mean by modulus of rupture in torsion?

Answer:

Under the action of the torque a shaft will fail when the torque will reach its ultimat value T_u. In practice for a specimen of a given material the ultimate torque T_u determined experimentally. Using the torsion formula, the value of the maximu shearing stress τ_R is obtained as,

$$\tau_R = \frac{T_u c}{J}$$

This Equation (2.11) follows the fictitious linear distribution represented by a dotted line as shown in Figure 2.6. This fictitious shearing stress τ_R is called the *modulus of rupture in torsion* of a given material. In the same figure the actual distribution of the shearing stress is also shown, which is of non-linear nature because it goes beyond the proportional limit and τ_u is the *actual ultimate shearing stress.*

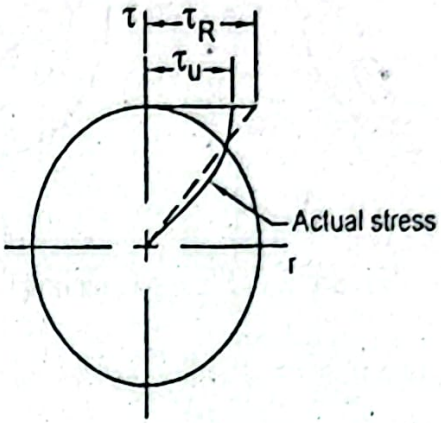

Figure 2.6: Distribution of Stresses in a Section of a Shaft under Torque.

The value of the modulus of rupture as obtained from Equation (2.11) may be used to determine the ultimate torque T_u of a shaft made of the same material but of different dimensions. Since the actual and fictitious linear stress distributions for a shaft must resist the same ultimate torque T_u, therefore, the value of the modulus of rupture τ_R will always be greater than the actual ultimate shearing stress τ_u.

Answer to the Question 4.5 may be seen for further clarification.

Question 2.5: Find a relation of torque capacity for a flange coupling.

Answer:

A flange coupling is used commonly when two shafts are connected. The bolts in the coupling are subjected to the shearing stress due to the twisting moment T. If the diameter of bolts is not high compared to the diameter of the shaft then it may be assumed that the shearing stress is distributed uniformly in each bolt, then the shear force in any bolt can be obtained from;

$$P = \tau A = \tau\left(\frac{\pi d^2}{4}\right) \qquad (2.12)$$

where,

τ = Average shearing stress in bolt

A = Cross-sectional area of bolt

d = Diameter of bolt

In Figure 2.7a, a group of bolts have been used on a single concentric pitch circle with equal inter spacing. If N is the number of bolts, the torque capacity of the coupling can be obtained from,

$$T = NPR = N\left(\frac{\pi d^2}{4}\right)\tau R \qquad (2.13)$$

where,

N = Number of bolts

R = Radius of pitch circle

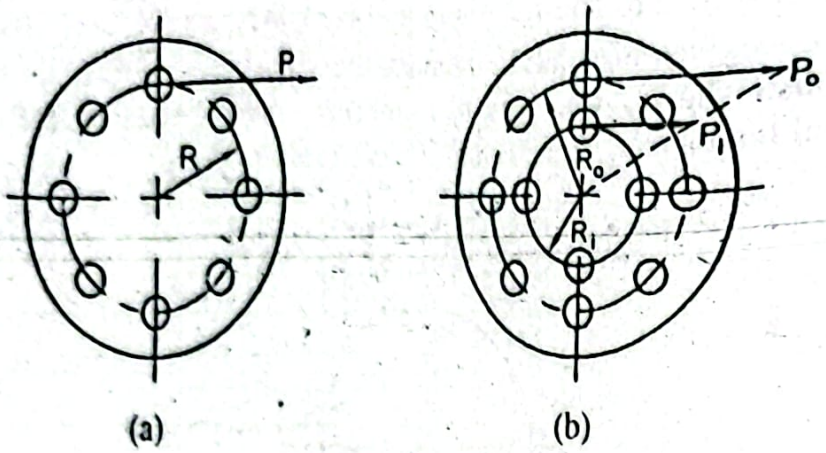

(a) (b)

Figure 2.7: Flange Coupling.

Often the bolts are used in two concentric pitch circles, then the torque capacity can b obtained from,

$$T = N_o P_o R_o + N_i P_i R_i \qquad (2.14$$

where,

N_o = Number of bolts in outer pitch circle

N_i = Number of bolts in inner pitch circle

P_o = Shear force in bolt of outer pitch circle

P_i = Shear force in bolt of inner pitch circle

R_o = Radius of outer pitch circle

R_i = Radius of inner pitch circle

It has been shown in Figure 2.7b that the shear forces in the bolts vary linearly with the distance from the center of the flange coupling. The power transmitted may be calculated from,

$$H = T\omega$$

where, ω is the angular velocity of the shaft.

Question 2.6: Find torsion formula for a riveted connection subjected to a twisting moment.

Answer:

A riveted connection is shown in Figure 2.8. In this connection a plate is fastened with a member by a number of rivets and C represents the centroid of this group of rivets. The riveted connection is subjected to an eccentric load P with an eccentricity of e (Figure 2.8a). This eccentric load has been transformed into a load P passing through the centroid and a twisting moment T equal to Pe as shown in Figure 2.8b. Here the load P yields the direct shearing stress and T yields the torsional shearing stress in the rivets.

The *centroid of group of rivets* (or bolts if bolts are used) can be obtained from the following relations,

$$\bar{x} = \frac{\Sigma A_i x_i}{\Sigma A_i} \quad \text{and} \quad \bar{y} = \frac{\Sigma A_i y_i}{\Sigma A_i} \tag{2.15}$$

where, ΣA_i = Sum of cross-sectional areas of all rivets or bolts.

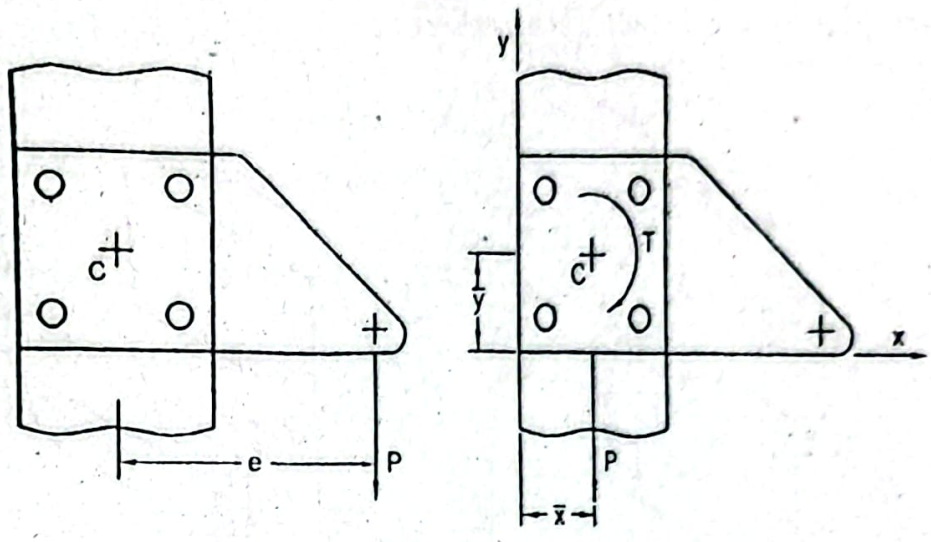

(a) (b)

Figure 2.8: Torsional Load in a Riveted Connection.

The average direct shearing stress in each bolt is obtained from,

$$\tau_d = \frac{P}{\Sigma A_i} \tag{2.16}$$

The torsional shearing stress in each bolt can be determined from the relation,

$$\tau = \frac{Tc}{J} \tag{2.17}$$

It is assumed that each rivet is concentrated at a point. The distance c in Equation (2.17) is replaced by ρ, where ρ is the distance between the rivet and the centroid of the group of rivets. The polar moment of inertia of the group of rivets is given by,

$$J = \Sigma \rho_i^2 A_i$$

Substituting these values in Equation (2.17), the torsional shearing stress in any rivet at a distance of ρ_i from the centroid of the group of rivets can be written as,

$$(\tau_i)_i = \frac{T\rho_i}{\Sigma \rho_i^2 A_i} \tag{2.18}$$

When each of the rivets has equal cross-sectional area A, then Equation (2.18) becomes.

$$(\tau_i)_i = \frac{T\rho_i}{A\Sigma \rho_i^2} \tag{2.19}$$

From Equation (2.19) it is obvious that the farthest rivet from the center of the group will yield the highest torsional shearing stress.

to a torsional load.

Answer:

When a member is subjected to a torsional load, shearing stresses develop in t transverse section of the member. These transverse shearing stresses induce shear stresses in the longitudinal section. The transverse and longitudinal shearing stresses a equal in magnitude and perpendicular to each other.

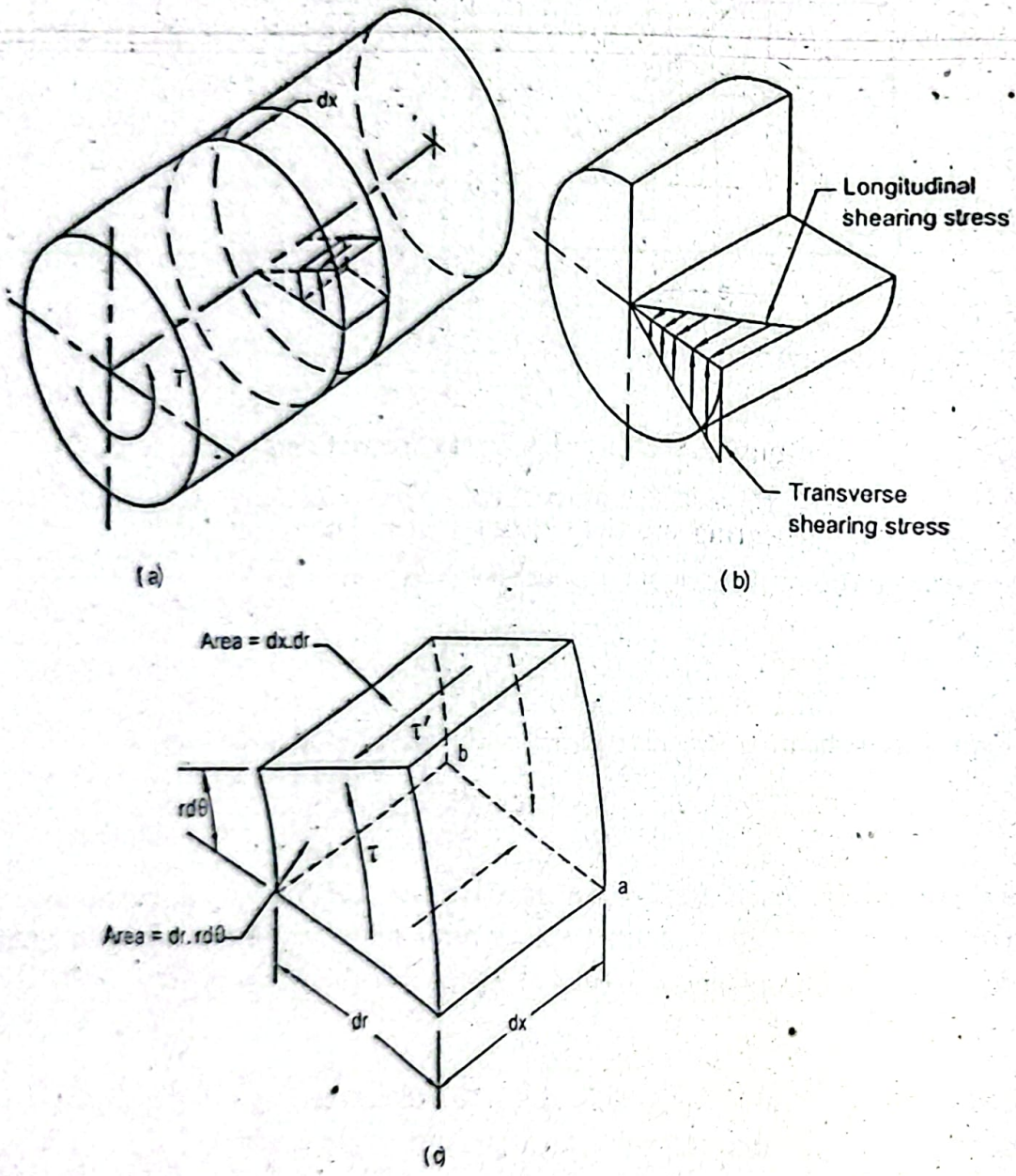

Figure 2.9: Transverse and Longitudinal Shearing Stresses.

In Figure 2.9a, a solid circular shaft is loaded by a torque T. For this torque shearing stresses are developed in the transverse section which is shown in Figure 2.9b. The longitudinal shearing stresses induced by the transverse shearing stresses are also shown in this figure. A differential volume element is considered in the shaft whose free body diagram in enlarged view is shown in Figure 2.9c. This volume element consists of two transverse planes and two longitudinal planes. In the static equilibrium condition moment about any axis of the free body diagram of the volume element will be zero. Taking moment about the axis *ab*, we find,

$$\Sigma M_{ab} = 0:$$

$$(\tau dr d\theta)dx - (\tau' dr dx)rd\theta = 0$$

which gives, $$\tau = \tau' \qquad (2.20)$$

That is, the transverse shearing stresses are equal in magnitude to the longitudinal shearing stresses.

Question 2.8: Obtain an expression of torsional shearing stress for a thin-walled tube.

Answer:

A thin-walled tube of an arbitrary shape with variable wall thickness t as shown in Figure 2.10a, is subjected to a torsional load T. The thickness is small compared to the dimension of cross-section of the tube. A small element of length Δx has been cut from the tube and its enlarged view is shown in Figure 2.10b. For small thickness the shearing stress across the thickness is considered uniform. Across the thickness t_1, a torsional shearing stress τ_1 induces longitudinal shearing stress of the same magnitude but occurs in the perpendicular direction. Similarly, across the thickness t_2, torsional shearing stress τ_2 induces longitudinal shearing stress of the same magnitude.

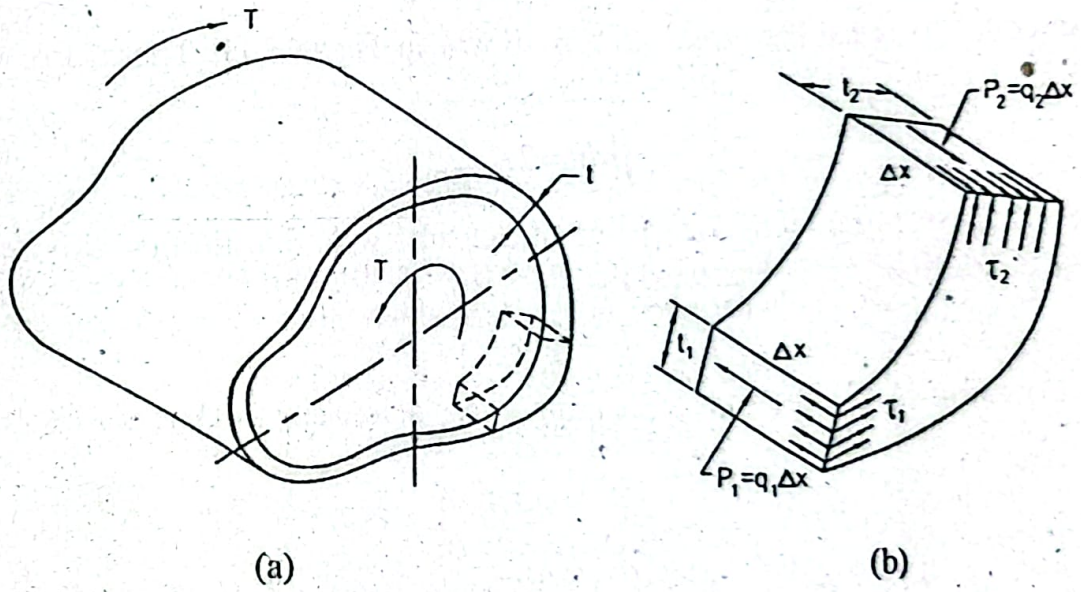

(a) (b)

Figure 2.10: A Thin-Walled Tube of an Arbitrary Shape Loaded by Torsion.

At any thickness q indicates $\int_{-t/2}^{t/2} \tau dt$ and q is called the *shear flow*. This shear flow is analogous to the flow of incompressible fluid around a closed channel with its boundaries being the inner and outer walls of the tube.

The resultant of the longitudinal shearing stresses can be expressed as,

$$P_1 = q_1 \Delta x \text{ and } P_2 = q_2 \Delta x$$

For equilibrium in the longitudinal direction,

$$P_1 = P_2 \text{ or, } q_1 \Delta x = q_2 \Delta x \text{ or, } q_1 = q_2 \qquad (2.21)$$

Equation (2.21) indicates that shear flow is constant around the cross-section of the tube.

Figure 2.11 is used to find a relation of torque with the shear flow. The tangential on the elemental distance ds creates a moment $r(qds)$ about any center o. Integ over the entire circumference of the tube, the torque T can be found as,

$$T = \oint rqds = q\oint rds \qquad (2$$

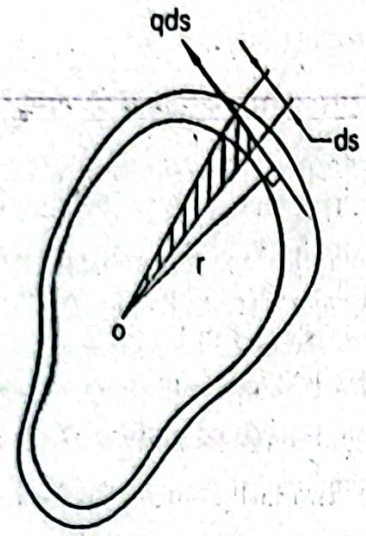

Figure 2.11: Relation of Torque with Shear Flow.

But rds is equal to twice the shaded area as shown in Figure 2.11. Therefore, we write,

$$\oint rds = 2A$$

where, area A is enclosed by the center line of the tube wall. Substituting this value Equation (2.22), torque can be expressed as,

$$T = 2Aq \qquad (2.2$$

Using this Equation (2.23), the average shearing stress across any thickness t of the tu is obtained as,

$$\tau = \frac{q}{t} = \frac{T}{2At} \qquad (2.2$$

This is the simple approximate solution for torsional shearing stress of a tube when i wall thickness is small.

Question 2.9: Narrate in brief about shearing stress and angle of twist on a ntembe with non-circular rectangular section?

Answer:

When a member with non-circular cross-section undergoes the action of torsional load its mathematical analysis becomes complicated. In Figure 2.12 typical shearing stres distributions in a shaft with rectangular cross-section subjected to a torque has bee shown. It is observed from this figure that there are no shearing stresses at the corners o the rectangular section. Shearing stress is maximum at the midpoints of the long sides of the section. In a circular member under the action of torque, the stress is maximum at the

outer surface, that is, at the remote distance but here for a non-circular rectangular section at the remote corner the shearing stress is zero.

From the analytical solutions, shearing stress and angle of twist for an elastic member with rectangular section under the action of torque can be obtained as.

$$\tau_{max} = \frac{T}{\alpha bc^2} \qquad \phi = \frac{TL}{\beta bc^3 G} \tag{2.25}$$

where,
T = Applied torque
L = Length of member
b = Long side of rectangular section
c = Short side of rectangular section
α, β = Parameters dependent on ratio b/c.

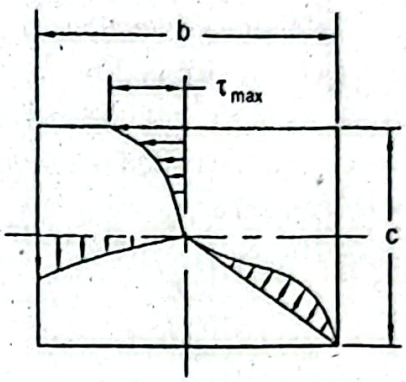

Figure 2.12: Shearing Stress Distributions on a Non-Circular Rectangular Section.

Some values of the parameters are given in Table 2.1. For thin sections when b is much greater compared to c, the values of α and β approach 1/3.

Table 2.1: Coefficients for Shaft with Rectangular Section.

b/c	1.00	1.50	2.00	3.00	6.00	10.00	∞
α	0.208	0.231	0.246	0.267	0.299	0.312	0.333
β	0.141	0.196	0.229	0.263	0.299	0.312	0.333

Question 2.10: What is stress concentration? Discuss the variation of stress concentration with examples for different cases.

Answer:

When any discontinuity in a member is present the stress distribution in the neighborhood of the discontinuity will be different. In the vicinity of the discontinuity, stress is higher than that obtained by the simple stress equations $\frac{P}{A}$, $\frac{Mc}{I}$ and $\frac{Tc}{J}$. This phenomenon of increasing stress in the neighborhood of the discontinuity is called the *stress concentration*. Discontinuity in a member is essential for many reasons. A shaft may contain a shoulder for placement of a bearing, a keyway for fastening a pulley, a gear etc. as shown in Figure 2.13a. A bolt has a head on one end and screw threads on the other

end, which make the sudden change in the cross-section as shown in Figure 2.13b. A
plate may contain a hole for fixing it by a bolt as shown in Figure 2.13c. These are kno
as the *discontinuities* and they yield stress concentration in the neighborhood
discontinuity when loaded.

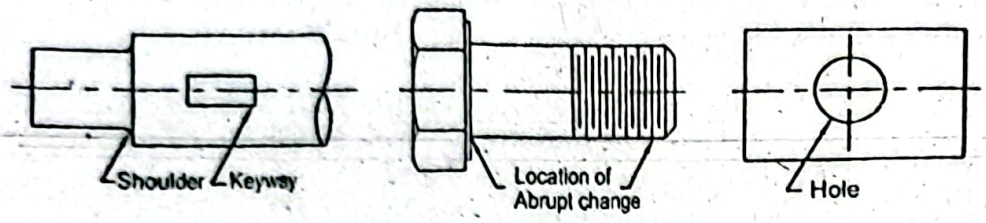

(a) (b) (c)

Figure 2.13: Discontinuity in Different Members.

The ratio of the maximum stress developed in the neighborhood of the discontinuity an
the stress obtained from the simple stress equation is called the *stress concentratio
factor*. The stress concentration factor is denoted by K. This stress concentration fact
depends on the geometry of the member not the material by which the member
manufactured. As a matter of fact it is often called *theoretical stress concentration facto*
The stress concentration factor is obtained as,

$$K = \frac{\sigma_{max}}{P/A}, \qquad K = \frac{\sigma_{max}}{Mc/I}, \qquad K = \frac{\tau_{max}}{Tc/J} \tag{2.26}$$

Figure 2.14 shows stress distribution in an infinite flat plate with an elliptic hole. The
plate undergoes the tensile load. The stress at the neighborhood of the hole is maximum
On the other hand, the stress at a remote distance from the location of the hole is uniform
By using the method of theory of elasticity the maximum stress σ_{max} can be expressed as

$$\sigma_{max} = \sigma_{av}\left(1 + \frac{2b}{a}\right) \tag{2.27}$$

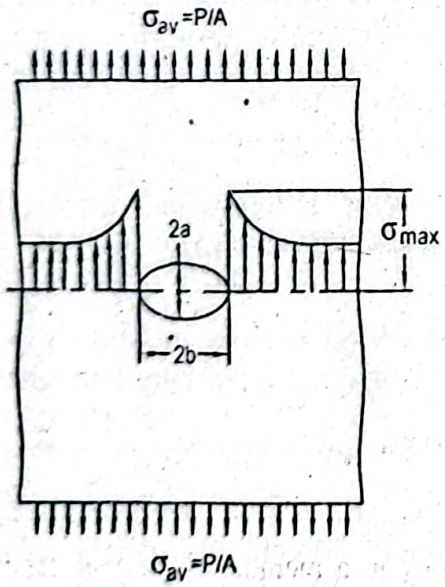

Figure 2.14: Stress Distribution in an Infinite Plate with Elliptic Hole.

Here the average stress σ_{av} occurs at a point remote from the discontinuity in the infinite plate. When a is equal to b the ellipse becomes a circle and Equation (2.27) reduces to,

$$\sigma_{max} = 3\sigma_{av}$$

Then the value of the stress concentration factor $K = 3$. Equation (2.27) can be used for both the longitudinal and transverse cracks. When the value of b becomes small, the hole is transformed into a longitudinal crack and the value of K becomes unity. On the other hand, when the value of a becomes small, the hole is transformed into a transverse crack and the value of K becomes very large. That is, the transverse crack is dangerous. The values of K for various configurations are available in many literatures.

A concentrated load in a member yields stress concentration. Figure 2.15 shows stress concentration in a member for a concentrated load. The stress distribution has been obtained using the method of theory of elasticity. It is observed from this figure that the stress distribution depends on the distance from the location of the load. At a distance of h the stress distribution is close to the average stress, where h is the width of the member. At a distance of one-quarter width of the member, the maximum stress is 2.575 times the average stress.

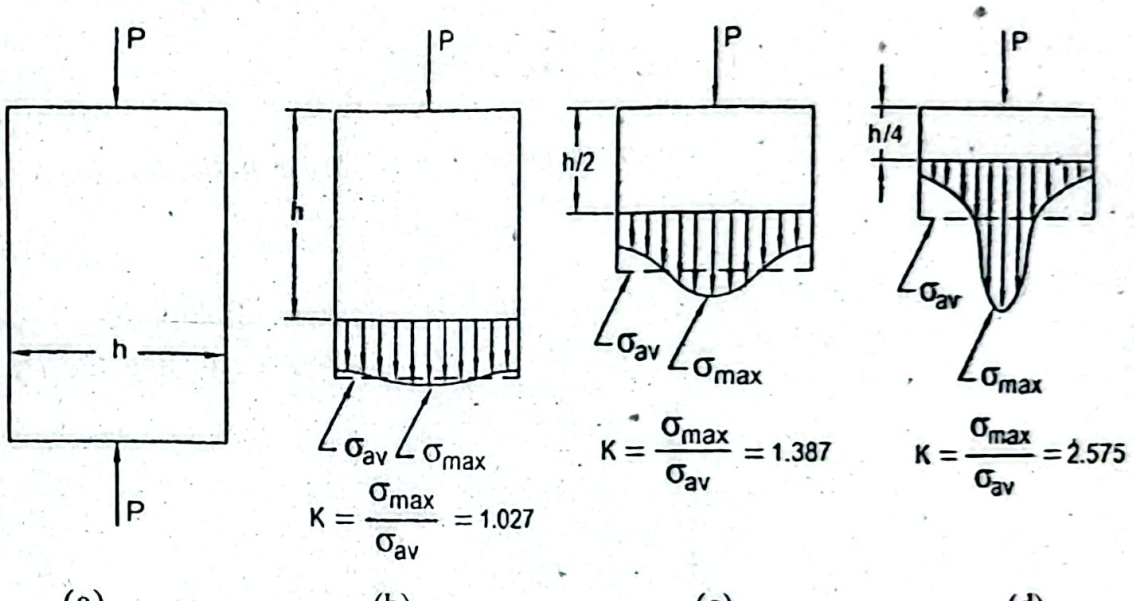

Figure 2.15: Stress Concentration for a Concentrated Load.

Question 2.11: Define a spring? Give a short note on different types of springs.

Answer:

A *spring* is a resilient member which can produce large elastic deformation. It is basically an elastic body which gives deformation under the action of the load and returns to its original position when the load is released. The springs may be used to exert force as to keep cam follower in contact with the cam in an internal combustion engine, to act as a source of energy as in clocks, to absorb energy or shock loads as in automobile chassis springs and also to absorb vibration.

In general springs are classified as (a) wire springs, (b) flat springs and (c) special shaped springs. *Wire springs* include helical springs made of round or square wire and may be of cylindrical or conical shape. The springs shown in Figures 2.16a, 2.16b and 2.16c are

respectively the *compression, extension and torsion springs*. Compression spri
extension spring and torsion spring are used to resist compressive load, tensile load a
torsional load respectively. Flat springs are cantilever and elliptical type springs. The f
spring washers are usually called the *Belleville springs*. A *flat spring* of elliptical ty
often called the *leaf spring* is shown in Figure 2.16d. This leaf spring is used in t
chassis of automobiles, auto rickshaws etc.

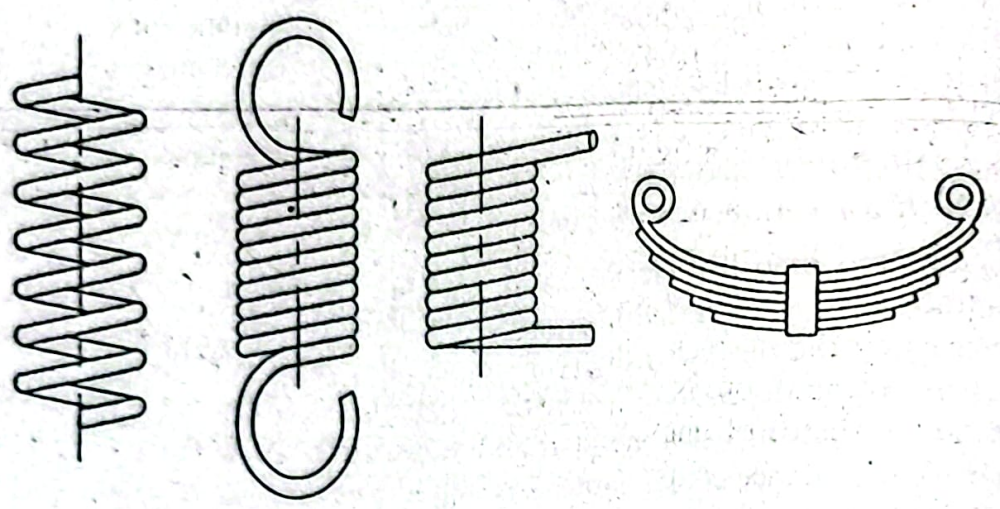

Figure 2.16: Types of Springs.

Question 2.12: Derive an expression of shearing stress for a helical compression spring.

Answer:

In Figure 2.17 a helical compression spring of round wire is shown. It supports an axial load of P. The mean diameter of the spring and the wire diameter are designated by D and d respectively.

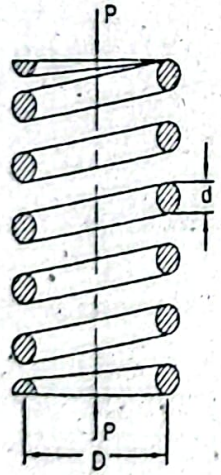

Figure 2.17: An Axially Loaded Helical Spring.

Now it is imagined that the spring has been cut at some point and a portion of it is removed. The free body diagram of the removed portion has been shown in Figure 2.18. The internal forces have been shown in the section of the removed portion. As shown in the figure the section of the wire is subjected to a direct shear P and a torsional load T. That is there will be twisting effect on the wire when an axial load is applied. This

phenomenon can be easily visualized from a coiled garden hose. When the end of the ose will be pulled in a straight line perpendicular to the plane of the coil, the hose will wists or turns about its own axis. The flexing of a helical spring produces torsion in the vire in the similar way.

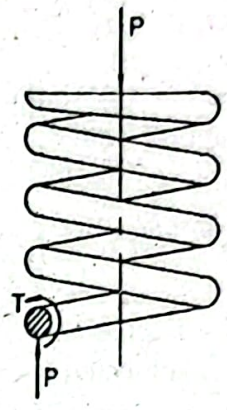

Figure 2.18: Free Body Diagram of Removed Portion of Spring.

he maximum shear stress τ_{max} consists of both the torsional shear stress and the direct ear stress and is obtained as,

$$\tau_{max} = \pm\frac{Tr}{J} + \frac{P}{A} \tag{2.28}$$

here,
= Radius of wire
= Cross-sectional area of wire
= Polar moment of inertia of section of wire

the right hand side of Equation (2.28) the first and second terms represent torsional ear stress and direct shear respectively. We know,

$$T = \frac{PD}{2},\ r = \frac{d}{2},\ A = \frac{\pi d^2}{4} \text{ and, } J = \frac{\pi d^4}{32}$$

bstituting these values in Equation (2.28), omitting negative sign and subscript *max*, e finds the expression of the maximum shearing stress at the inside fiber of the spring

$$\tau = \frac{8PD}{\pi d^3} + \frac{4P}{\pi d^2}$$

$$= \frac{P}{A}\left(1 + \frac{2D}{d}\right) \tag{2.29}$$

w to take care of the effect of coil curvature a *spring index* is introduced as $C = D/d$. s spring index indicates the relative sharpness of curvature of the coil. A low index icates the high sharpness of curvature and vice versa. Introducing the spring index uation (2.29) becomes,

$$\tau = \frac{8PD}{\pi d^3}\left(1 + \frac{0.5}{C}\right) \tag{2.30}$$

Defining *shear stress correction factor* K_s as,

$$K_s = \left(1 + \frac{0.5}{C}\right) = 1 + \frac{1}{2C}$$

and substituting in Equation (2.30) one obtains,

$$\tau = K_s \frac{8PD}{\pi d^3} \qquad (2$$

For most of the springs the value of C varies in the range from 6 to 12. Equation (2.3) applicable to both the static and dynamic loads.

Question 2.13: Give a brief idea about different stresses which are developed o helical compression spring.

Answer:

When a helical compression spring is subjected to an axial load, shear stress is develo in its wire. This shear stress is the resultant of the direct shear stress and the torsio shear stress. Distribution of the direct shear stress is uniform in the cross-section of wire and it is shown in Figure 2.19a. Distribution of the torsional shear stress in the cr section of the wire is shown in Figure 2.19b. The resultant of these stresses is show Figure 2.19c. From the resultant stress distribution it is observed that there is high st at the inner fiber and low stress in the outer fiber of wire. The direct and torsional sh stresses are added at the inner fiber and subtracted at the outer fiber algebraically.

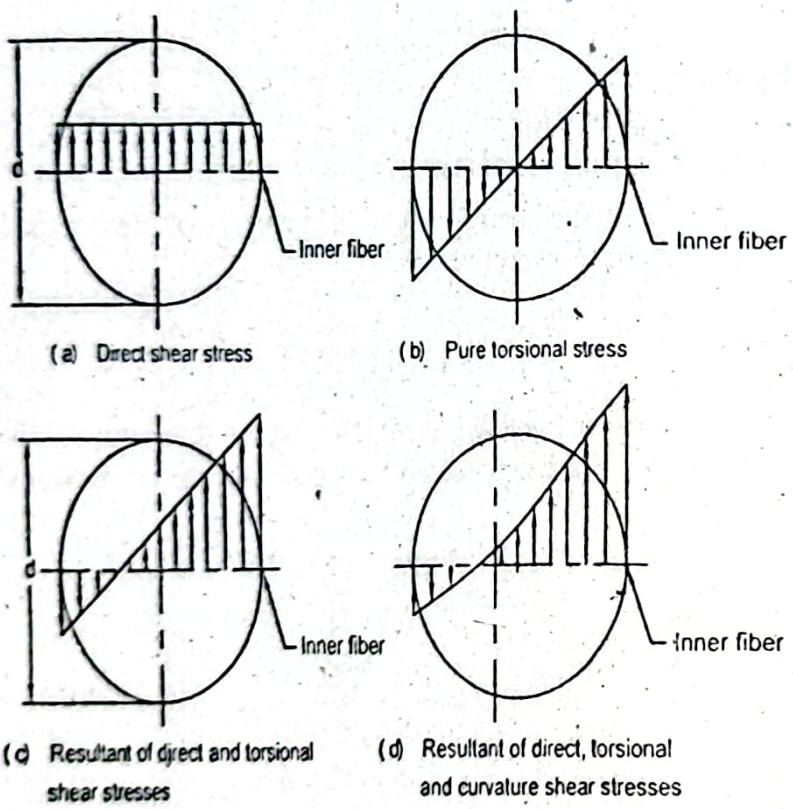

Figure 2.19: Cross-Section of Wire Showing Distribution of Stresses.

There is another shear stress which occurs at the inside surface of the wire due t curvature effect and it is known as *curvature shear stress*. This curvature effect at th inside surface is very similar to the stress concentration effect. The curvature shear stre

ncreases appreciably at the inner fiber and decreases slightly at the outer fiber. istribution of the resultant of direct shear stress, torsional shear stress and curvature hear stress is shown in Figure 2.19d. Since there is high stress at the inner fiber ompared to that at the outer fiber, always failure occurs at the inner fiber.

uestion 2.14: What is curvature effect? Discuss the factor which is used to take care f curvature effect?

nswer:

ue to the curvature of wire of the spring, stress will increase at the inside surface of the ire and decrease slightly at its outer surface. In other words, stress concentration will ccur at the inside surface of the wire due to the curvature of wire and it is known as the *urvature effect*. The stress due to the curvature may be neglected in case of the static oading, when the stress is relieved by the local yielding. But it is important for the ynamic loading.

o take care of the stress due to the curvature effect Wahl has introduced a factor called *Vahl factor* K_W which is expressed as,

$$K_W = \frac{4C-1}{4C-4} + \frac{0.615}{C} \tag{2.32}$$

his factor includes both the effects due to direct shear and curvature. As a result *rvature correction factor* K_c is obtained as,

$$K_c = \frac{K_W}{K_s} \tag{2.33}$$

hen there will be fatigue failure or material will be brittle, curvature correction factor is to be considered and Equation (2.29) will become as,

$$\tau = K_W \frac{8PD}{\pi d^3} \tag{2.34}$$

uestion 2.15: Find an expression of deflection and spring rate of a helical spring.

nswer:

o determine the deflection of a helical compression spring the effect of torsional load is ly taken into consideration in practice. A segment of wire of a helical spring under the tion of torsional load is shown in Figure 2.20. Due to the twisting effect an axial flection δ yields as shown in the figure.

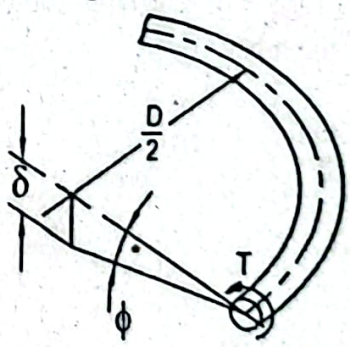

Figure 2.20: Segment of a Wire under Torsional Load.

From Equation (2.10) the expressio... ...ect becom...

$$\phi = \frac{TL}{GJ} \qquad (2.$$

To use Equation (2.10) for a helical spring, the following expressions are used,

$$L = \pi D N_a, \quad T = \frac{PD}{2}, \quad J = \frac{\pi d^4}{32}$$

where,

N_a = Number of active coil

L = Active length of coil

Substituting these values in Equation (2.10), one can find the expression of angle of tw... as,

$$\phi = \frac{16PD^2N_a}{Gd^4} \qquad (2.$$

Following Figure 2.20, the axial deflection δ can be obtained as,

$$\delta = \frac{\phi D}{2} \qquad (2.$$

Now from Equations (2.35) and (2.36) one obtains,

$$\delta = \frac{8PD^3N_a}{Gd^4} \qquad (2.3$$

Spring rate k is defined as,

$$k = \frac{P}{\delta} \qquad (2.3$$

Therefore, the expression of k becomes,

$$k = \frac{d^4G}{8D^3N_a} \qquad (2.39$$

SOLVED PROBLEMS

Problem P2.1:

A long tube having outside diameter of $30mm$ and wall thickness of $6mm$ is twist... about its longitudinal axis with a torque of $200Nm$. Determine the shearing stresses ... the outside and inside surfaces of the tube.

Given Data:

Outside diameter, $d_o = 30mm$

Wall thickness, $t = 6mm$

Torque, $T = 200Nm$

To Find:

- Shearing stress at outside surface, τ_o

Shearing stress at inside surface, τ_i

olution:

;ross-section of the tube is shown in the following figure.

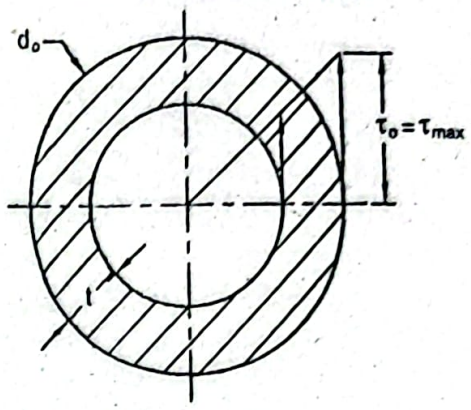

nside diameter, $d_i = d_o - 2 \times t$

$= 30 - 2 \times 6 = 18mm$

»olar moment of inertia, $J = \frac{\pi}{32}\left[d_o^4 - d_i^4\right]$

$= \frac{\pi}{3}\left[30^4 - 18^4\right] = 69.22 \times 10^3\ mm^4$

;hearing stress at the outside surface,

$$\tau_o = \tau_{max} = \frac{Tc}{J} = \frac{200 \times 10^3 \times 30/2}{69.22 \times 10^3}$$

$= 43.34MPa$ ***Answer***

Shearing stress at the inside surface,

$$\tau_i = \frac{Tc}{J} = \frac{200 \times 10^3 \times 18/2}{69.22 \times 10^3} MPa = 26.00MPa$$ ***Answer***

Problem P2.2:

A solid circular steel shaft is subjected to a torque of $15kNm$. If the shaft is not to twist more than 3.5^0 in a length of $7m$, determine its diameter. Also determine the maximum ;hearing stress developed.

Given Data:

Length of shaft, $L = 7m$

Allowable angle of twist, $\phi_a = 3.5^0$

Applied torque, $T = 15kNm$

Modulus of rigidity, $G = 80GPa$

To Find:

- Diameter of shaft, d
- Maximum shearing stress, τ_{max}

Solution:

We have for the angle of twist, $\phi = \frac{TL}{GJ}$

$$\text{or, } \phi_a = \frac{}{180} \qquad 80\times10^3 \times \frac{\pi a}{32}$$

$$\text{or, } d = 121.63mm \text{ Answer}$$

Maximum shearing stress will occur at the outside surface, therefore,

$$\tau_{max} = \frac{Tc}{J}$$

$$= \frac{15\times10^6 \times \frac{121.63}{2}}{\frac{\pi\times121.63^4}{32}} MPa$$

$$= 42.46MPa \text{ Answer}$$

Problem P2.3:

A $6m$ long solid steel shaft transmits power at $25Hz$, when the shaft is twisted by and the maximum shearing stress developed in the shaft is $60MPa$. Determine diameter of the shaft and power transmitted if the modulus of rigidity $G = 80MPa$.

Given Data:

Length of shaft, $L = 6m$

Frequency, $f = 25Hz$

Angle of twist, $\phi = 3.5^0$

Maximum shearing stress, $\tau_{max} = 60MPa$

Modulus of rigidity, $G = 80MPa$

To Find:

- Diameter of shaft, d
- Power transmitted, H

Solution:

Angle of twist, $$\phi = \frac{TL}{GJ}$$

$$\text{or, } \frac{3.5\times\pi}{180} = \frac{T\times6\times10^3\times32}{80\times10^3\times\pi d^4}$$

$$\text{or, } T = 0.08d^4 \text{ Nmm}$$

Maximum shearing stress, $\tau_{max} = \frac{Tc}{J} = \frac{16T}{\pi d^3}$

$$\text{or, } 60 = \frac{16\times0.08d^4}{\pi d^3}$$

$$\text{or, } d = 147.26mm \text{ Answer}$$

Torque, $$T = 0.08d^4 = 0.08(147.26)^4\times10^{-6} kNm$$

$$= 37.62kNm$$

Therefore, the power transmitted,

$$H = T\omega = T2\pi f$$

$= 37.62 \times 2\pi \times 25\,kW$

$= 5909.34\,kW$ *Answer*

roblem P2.4:

etermine the maximum torque that can be transmitted by a solid circular steel shaft of iameter *100mm*, if the maximum shearing stress is limited to *70MPa*. Now if the solid ircular shaft is replaced by a hollow circular steel shaft with its inside diameter *0.75* mes its outside diameter keeping its length, mass and limiting shearing stress same, etermine the ratio of the maximum torques transmitted by the hollow and solid shafts.

iven Data:

iameter of solid shaft, $d_s = 100mm$

ength of solid shaft, $L_s = L_h$

side diameter of hollow shaft, $d_i = 0.75d_o$

lass of solid shaft, $m_s = m_h$

imiting shearing stress, $\tau_a = 70MPa$

o Find:

Maximum torque transmitted by solid shaft, T_s

Ratio of maximum torques transmitted, T_h / T_s

olution:

aximum shearing stress of the solid shaft,

$$\tau_{s_{max}} = \frac{16T_s}{\pi d_s^3}$$

$$\text{or, } \tau_a = 70 = \frac{16 \times T_s}{\pi \times 100^3}$$

$$\text{or, } T_s = 13.74 \times 10^6\,Nmm \text{ Answer}$$

re, T_s is the maximum torque transmitted by the solid shaft.

ce the mass and length of the solid and hollow shafts are same, we find,

$$\rho A_s L_s = \rho A_h L_h$$

$$\text{or, } A_s = A_h$$

$$\text{or, } \frac{\pi d_s^2}{4} = \frac{\pi}{4}\left(d_o^2 - d_i^2\right)$$

$$\text{or, } 100^2 = \left[d_o^2 - (0.75d_o)^2\right]$$

$$\text{or, } d_o = 151.19mm$$

refore, $d_i = 0.75 \times 151.19mm = 113.39mm$

ar moment of inertia of the hollow shaft,

$$J_h = \frac{\pi}{32}\left[d_o^4 - d_i^4\right] = \frac{\pi}{32}\left[151.19^4 - 113.39^4\right] mm^4$$

$$= 35.07 \times 10^6\,mm^4$$

ximum shearing stress of the hollow shaft,

$$\text{or, } \tau_a = 70 = \frac{T_h \times \frac{151.19}{2}}{35.07 \times 10^6}$$

$$\text{or, } T_h = 32.47 \times 10^6 \; Nmm$$

Here, T_h is the maximum torque transmitted by the hollow shaft.

Therefore, the required ratio of the maximum torques transmitted,

$$\frac{T_h}{T_s} = \frac{32.47 \times 10^6}{13.74 \times 10^6} = 2.36 \quad \textit{Answer}$$

Problem P2.5:

Power is transmitted from a solid circular steel shaft AB of diameter $75mm$ to a s circular steel shaft CD of diameter $55mm$ through a pair of gears as shown in Fig P2.5. Considering only the stresses due to twisting, determine the maximum torque that can be transmitted if the maximum shearing stress is limited to $60MPa$ for each the shafts.

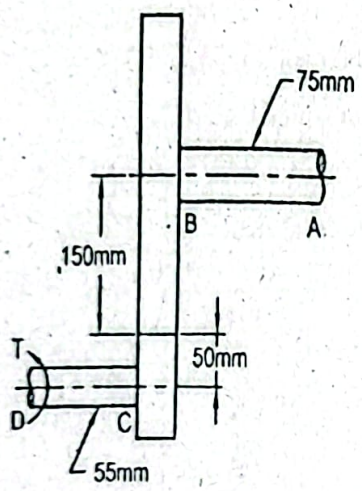

Figure P2.5

Given Data:

Diameter of shaft AB, $d_{AB} = 75mm$

Diameter of shaft CD, $d_{CD} = 55mm$

Limiting shearing stress, $\tau_a = 60MPa$

To Find:

- Maximum torque, T

Solution:

Maximum shearing stress in the shaft AB,

$$\tau_{AB_{max}} = \frac{16 \times T_{AB}}{\pi d_{AB}^3}$$

$$\text{or, } \tau_a = 60 = \frac{16 T_{AB}}{\pi \times 75^3}$$

$$\text{or, } T_{AB} = 4.97 \times 10^6 \; Nmm$$

Maximum shearing stress ... shaft CD,

$$\tau_{CD_{max}} = \frac{16 \times T_{CD}}{\pi d_{CD}^3}$$

$$\text{or, } \tau_a = 60 = \frac{16 T_{CD}}{\pi \times 55^3}$$

$$\text{or, } T_{CD} = 1.96 \times 10^6 \, Nmm$$

Here, T_{CD} is the maximum torque transmitted by the shaft CD.

The torque transmitted from the shaft AB to the shaft CD through gears,

$$= \frac{T_{CD} \times 50}{150} = \frac{4.97 \times 10^6 \times 50}{150} = 1.66 \times 10^6 \, Nmm$$

It indicates that if the shaft AB transmits higher torque than $1.66 \times 10^6 \, Nmm$, the shearing stress in the shaft AB will exceed the limiting value. Again, the limiting torque in shaft CD is $1.96 \times 10^6 \, Nmm$ which is higher than $1.66 \times 10^6 \, Nmm$. Therefore, the required value of torque, $T = 1.66 \times 10^6 \, Nmm$

or, $T = 1.66 kNm$ *Answer*

Problem P2.6:

Determine the maximum torque that can be transmitted by a hollow circular steel shaft of outside diameter of $120mm$ and inside diameter of $100mm$, if the maximum shearing stress is limited to $70MPa$ and the angle of twist is limited to $1^0 / m$. Consider modulus of rigidity for steel $G = 80GPa$.

Given Data:

Outside diameter of shaft, $d_o = 120mm$

Inside diameter of shaft, $d_i = 100mm$

Limiting angle of twist, $\phi_a = 1^0 / m$

Limiting shearing stress, $\tau_a = 70MPa$

Modulus of rigidity for steel, $G = 80MPa$

Find:

Maximum torque, T

Solution:

Polar moment of inertia, $J = \frac{\pi}{32}\left[d_o^4 - d_i^4\right]$

$$= \frac{\pi}{32}\left[120^4 - 100^4\right]$$

$$= 10.54 \times 10^6 \, mm^4$$

Maximum shearing stress, $\tau_{max} = \frac{T \times d_o / 2}{J}$

$$\text{or, } \tau_a = 70 = \frac{T \times 120 / 2}{10.54 \times 10^6}$$

$$\text{or, } T = 12.30kNm$$

Angle of twist, $\phi = \frac{TL}{GJ}$

$$\text{or, } \phi_a = \frac{1\times\pi}{180} = \frac{T\times 1\times 10^3}{80\times 10^3\times 10.54\times 10^6}$$

$$\text{or, } T = 14.72kNm$$

Therefore, the required maximum torque that can be transmitted,

$$T = 12.30kNm \text{ Answer}$$

Problem P2.7:

A hollow circular steel shaft having inside diameter 0.8 times its outside dia transmits $1500kW$ of power at $5Hz$. Determine the minimum diameter of the shaft maximum shearing stress is not to exceed $70MPa$ and the angle of twist is not to e 1^0 in a length of 12 outside diameters. Consider modulus of rigidity for $G = 80GPa$.

Given Data:

Inside diameter, $d_i = 0.8d_o$

Frequency, $f = 5Hz$

Power transmitted, $H = 1500kW$

Allowable angle of twist, $\phi_a = 1^0$ in a length of 12 diameters

Allowable shearing stress, $\tau_a = 70MPa$

Modulus of rigidity for steel, $G = 80GPa$

To Find:

- Minimum diameter, d

Solution:

Torque transmitted, $T = \frac{H}{\omega} = \frac{H}{2\pi f} = \frac{1500}{2\pi\times 5} = 47.75kNm$

Polar moment of inertia, $J = \frac{\pi}{32}\left[d_o^4 - d_i^4\right]$

$$= \frac{\pi}{32}\left[d_o^4 - (0.8d_o)^4\right]$$

$$= 0.058d_o^4$$

Maximum shearing stress on the top surface of the shaft,

$$\tau_{max} = \frac{T\times d_o/2}{J} = \frac{47.75\times 10^6\times d_o}{2\times 0.058d_o^4}$$

$$\text{or, } \tau_a = 70 = \frac{47.75\times 10^6}{0.116d_o^3}$$

$$\text{or, } d_o = 180.5mm$$

Angle of twist, $\phi = \frac{TL}{GJ}$

$$\frac{\pi}{180} = \frac{\pi}{80\times10^3\times0.058d_o^4}$$

or, $d_o = 191.98mm$

Therefore, the required minimum diameter, $d = 191.98mm$ **Answer**

Problem P2.8:

A solid circular shaft and a hollow circular shaft having its inside diameter 4/5th of its outside diameter transmit the same torque. If the maximum shearing stresses developed in both the shafts are same and the shafts have the same length, determine the weight ratio of the solid and hollow shafts.

Given Data:

Inside diameter of hollow shaft, $d_i = 4/5\times d_o$

Length of solid shaft, $L_s = L_h$

Torque transmitted by solid shaft, $T_s = T_h$

Maximum shearing stress of solid shaft, $\tau_{s_{max}} = \tau_{h_{max}}$

To Find:

Weight ratio of solid and hollow shafts

Solution:

Maximum shearing stress of the solid shaft,

$$\tau_{s_{max}} = \frac{16T_s}{\pi d_s^3} = \frac{T_s}{0.1963d_s^3} \qquad (i)$$

Here d_s is the diameter of the solid shaft.

Polar moment of inertia of the hollow shaft,

$$J_h = \frac{\pi}{32}\left[d_o^4 - d_i^4\right]$$

$$= \frac{\pi}{32}\left[d_o^4 - (0.8d_o)^4\right]$$

$$= 0.058d_o^4$$

Therefore, the maximum shearing stress of the hollow shaft,

$$\tau_{h_{max}} = \frac{T_h d_o/2}{J_h} = \frac{T_h d_s/2}{0.058d_o^4} = \frac{T_h}{0.116d_o^3} \qquad (ii)$$

Here d_o is the outside diameter of the hollow shaft.

Now equating the maximum shearing stresses from Equations (i) and (ii) we find,

$$\frac{T_s}{0.1963d_s^3} = \frac{T_h}{0.116d_o^3}$$

or, $d_o = 1.192d_s$ (Since $T_s = T_h$)

Inside diameter of the hollow shaft,

$$d_i = \frac{4}{5}d_o = \frac{4\times1.192d_s}{5} = 0.9536d_s$$

Weight of the solid shaft, $W_s = \rho A_s L_s$

Weight of the hollow shaft, $W_h = \rho A_h L_h$

Therefore, the ratio of weight, $\frac{W_s}{W_h} = \frac{\rho A_s L_s}{\rho A_h L_h} = \frac{A_s}{A_h}$ (Since $L_s = L_h$)

$$= \frac{\pi d_s^2 / 4}{\frac{\pi}{4}\left(d_o^2 - d_i^2\right)} = \frac{d_s^2}{(1.192 d_s)^2 - (0.9536 d_s)^2}$$

$$= 1.1955 \text{ Answer}$$

Problem P2.9:

A $4m$ long hollow circular steel shaft transmits $250kW$ of power at $3Hz$. I maximum shearing stress developed in the shaft is $80MPa$ and the corresponding of twist is 4^0, determine the outside and inside diameters of the shaft. Consider mo of rigidity $G = 80GPa$.

Given Data:

Length of shaft, $L = 4m$

Angle of twist, $\phi = 4^0$

Frequency of shaft, $f = 3Hz$

Power transmitted, $H = 250kW$

Maximum shearing stress, $\tau_{max} = 80MPa$

Modulus of rigidity for steel, $G = 80GPa$

To Find:

- Outside and inside diameters of shaft, d_o and d_i

Solution:

We have for maximum shearing stress, $\tau_{max} = \frac{Tc}{J}$ (

Power transmitted, $H = T\omega$

or, $250 = T \times 2\pi \times 3$

or, $T = 13.263kNm$

Substituting the values in Equation (i), $80 = \frac{13.253 \times 10^6 \times d_o / 2}{\frac{\pi}{32}\left(d_o^4 - d_i^4\right)}$

or, $d_o^4 - d_i^4 = 0.84435 \times 10^6 d_o$ (ii)

Angle of twist, $\phi = \frac{TL}{GJ}$

or, $\frac{4\pi}{180} = \frac{13.263 \times 10^6 \times 4 \times 10^3 \times 32}{80 \times 10^3 \times \pi \times \left(d_o^4 - d_i^4\right)}$

or, $d_o^4 - d_i^4 = 96.755 \times 10^6$ (iii)

Now from Equations (ii) and (iii), $0.84435 \times 10^6 d_o = 96.755 \times 10^6$

$$\text{or, } d_o = 114.59mm \text{ Answer}$$

Substituting the value of d_o in Equation (iii),

$$(114.59)^4 - d_i^4 = 96.755 \times 10^6$$

$$\text{or, } d_i = 93.27mm \text{ Answer}$$

Problem P2.10:

A circular steel shaft of constant diameter of $300mm$ transmits power at $30rpm$. If the maximum shearing stress in the shaft is not to exceed $60MPa$ and the angle of twist is not to exceed 1 degree in a length of 12 diameters, determine the maximum power that can be transmitted. Determine the per cent reduction in power transmission and weight of the shaft, if this shaft is made hollow with its inside diameter half of its outside diameter of $300mm$. Use modulus of rigidity $G = 80GPa$.

Given Data:

Diameter of shaft, $d = d_o = 300mm$

Inside diameter, $d_i = 150mm$

Speed of shaft, $n = 30rpm$

Limiting shearing stress, $\tau_a = 60MPa$

Limiting angle of twist, $\phi_a = 1^0$ in 12 diameters length

Modulus of rigidity for steel, $G = 80GPa$

To Find:

Power transmitted, H

Per cent reduction in power transmission

Per cent reduction in weight of shaft

Solution:

Angular velocity, $$\omega = \frac{2\pi n}{60} = \frac{2\pi \times 30}{60} = 3.1416\ rad/s$$

Maximum shearing stress for the solid shaft,

$$\tau_{s_{max}} = \frac{Tc}{J}$$

$$\text{or, } \tau_a = 60 = \frac{16T}{\pi d^3} = \frac{16T}{\pi \times 300^3}$$

$$\text{or, } T = 318.09 \times 10^6\ Nmm = 318.09kNm$$

Angle of twist for the solid shaft,

$$\phi_s = \frac{TL}{GJ}$$

Length, $$L = 12d = 12 \times 300mm$$

Therefore, $$\phi_a = \frac{1 \times \pi}{180} = \frac{T \times 12 \times 300 \times 32}{80 \times 10^3 \times \pi \times 300^4} \quad (\text{Writing } \phi_s = \phi_a)$$

$$\text{or, } T = 308.43 \times 10^6\ Nmm = 308.43kNm$$

Maximum torque transmitted will be the smaller of two values. That is,

$$T = 308.43kNm.$$

Therefore, the required amount of power transmitted by the solid shaft,

$$H_s = T\omega = 308.43 \times 3.1416 kW = 968.26 kW \quad \text{An}$$

Now the maximum shearing stress for the hollow shaft,

$$\tau_{h_{max}} = \frac{T \times d_o / 2}{\frac{\pi}{32}\left[d_o^4 - d_i^4\right]}$$

$$\text{or, } \tau_o = 60 = \frac{T \times 300/2}{\frac{\pi}{32}\left[300^4 - 150^4\right]}$$

$$\text{or, } T = 298.21 \times 10^6 \, Nmm = 298.21 kNm$$

Angle of twist for the hollow shaft,

$$\phi_h = \frac{T \times 12 \times d_o}{G\frac{\pi}{32}\left[d_o^4 - d_i^4\right]}$$

$$\text{or, } \phi_o = \frac{1 \times \pi}{180} = \frac{T \times 12 \times 300 \times 32}{80 \times 10^3 \times \pi\left[300^4 - 150^4\right]} \quad \text{(Writing } \phi$$

$$\text{or, } T = 289.15 \times 10^6 \, Nmm = 289.15 kNm$$

Now considering the smaller of the two values of the torques, the amount of transmitted by the hollow shaft,

$$H_h = T\omega = 289.15 \times 3.1416 kW = 908.39 kW$$

Hence, the required per cent reduction in power transmission,

$$= \frac{H_s - H_h}{H_s} \times 100 = \frac{968.96 - 908.39}{968.96} \times 100 = 6.25 \quad \text{An}$$

Weight of the solid shaft, $W_s = \rho A_s L$

Weight of the hollow shaft, $W_h = \rho A_h L$

Therefore, per cent reduction in weight of the shaft,

$$= \frac{W_s - W_h}{W_s} \times 100$$

$$= \frac{\rho A_s L - \rho A_h L}{\rho A_s L} \times 100$$

$$= \frac{A_s - A_h}{A_s} \times 100 = \frac{\frac{\pi}{4} \times 300^2 - \frac{\pi}{4}\left(300^2 - 150^2\right)}{\frac{\pi}{4} \times 300^2} \times 100$$

$$= \frac{150^2}{300^2} \times 100 = 25 \quad \text{Answer}$$

Problem P2.11:

A solid stepped shaft ABC is fixed at the end A as shown in Figure P2.11. If a torque *50kNm* is applied at its free end, determine the angle of twist at the free end. Consi modulus of rigidity for steel $G = 80GPa$.

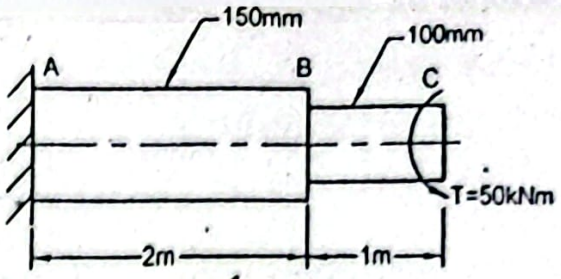

Figure P2.11

Given Data:

Length, $L_{AB} = 2m$

Length, $L_{BC} = 1m$

Torque, $T = 50kNm$

Modulus of rigidity, $G = 80MPa$

To Find:

- Angle of twist at free end, $\phi_{C/A}$

Solution:

Angle of twist at the free end, $\phi_{C/A} = \phi_{C/B} + \phi_{B/A}$

$$= \left(\frac{TL}{GJ}\right)_{BC} + \left(\frac{TL}{GJ}\right)_{AB}$$

$$= \frac{50\times10^{6}\times1\times10^{3}}{80\times10^{3}\times\frac{\pi}{32}(100)^{4}} + \frac{50\times10^{6}\times2\times10^{3}}{80\times10^{3}\times\frac{\pi}{32}(150)^{4}}$$

$$= 0.08881\,rad$$

$$= 5.09\,deg\,ree\ Answer$$

Problem P2.12:

A solid bronze shaft of $60mm$ diameter is loaded by two couples as shown in Figure P2.12. Determine the maximum shearing stress in each segment and the angle of twist at the free end. Modulus of rigidity for bronze is $35GPa$.

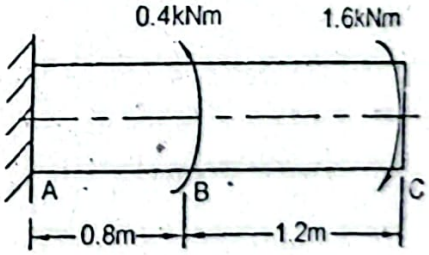

Figure P2.12

Given Data:

Diameter of shaft, $d = 60mm$

Applied couple at B, $T_B = 0.4kNm$

Applied couple at C, $T_C = 1.6kNm$

Modulus of rigidity for bronze, $G = 35GPa$

To Find:

- Maximum shearing stress in segment AB, τ_{AB}
- Maximum shearing stress in segment BC, τ_{BC}
- Angle of twist at free end, $\phi_{C/A}$

Solution:

Free body diagram of the entire shaft is shown in the following figure.

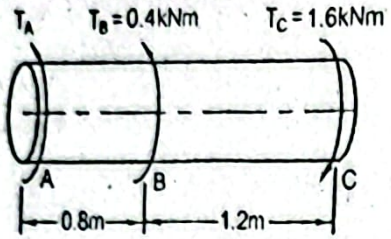

In static equilibrium condition,

$$\sum M = 0$$

$$\text{or, } T_A + 0.4 - 1.6 = 0$$

$$\text{or, } T_A = 1.2kNm$$

Maximum shearing stress in the segment AB,

$$\tau_{AB} = \frac{16T_A}{\pi d^3} = \frac{16 \times 1.2 \times 10^6}{\pi \times 60^3} MPa = 28.29MPa \quad \textbf{Answer}$$

Maximum shearing stress in the segment BC,

$$\tau_{BC} = \frac{16(T_A + T_B)}{\pi d^3} = \frac{16 \times 1.6 \times 10^6}{\pi \times 60^3} MPa = 37.73MPa \quad \textbf{Answer}$$

Angle of twist at the free end,

$$\phi_{C/A} = \phi_{C/B} + \phi_{B/A}$$

$$= \left(\frac{TL}{GJ}\right)_{BC} + \left(\frac{TL}{GJ}\right)_{AB}$$

$$= \frac{1.6 \times 10^6 \times 1.2 \times 10^3}{35 \times 10^3 \times \frac{\pi}{32}(64)^4} + \frac{(1.6 - 0.4) \times 10^6 \times 0.8 \times 10^3}{35 \times 10^3 \times \frac{\pi}{32}(60)^4}$$

$$= 0.0647rad = 3.71^0 \quad \textbf{Answer}$$

Problem P2.13:

A solid circular steel shaft of constant diameter is loaded by two couples as shown in Figure P2.13. If the maximum shearing stress is not to exceed $80MPa$ and the angle of twist at the free end is not to exceed 4^0, determine the minimum diameter of the shaft. Consider modulus of rigidity $G = 80GPa$.

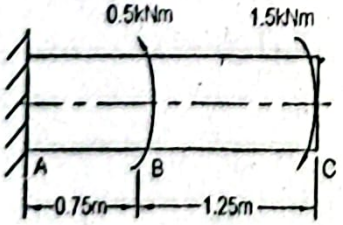

Figure P2.13

ength c. ....

llowable angle of twist, $\phi_a = 4^0$

llowable shearing stress, $\tau_a = 80MPa$

lodulus of rigidity, $G = 80GPa$

o ***Find:***

Minimum diameter of shaft, d_{min}

olution:

ee body diagram of the entire shaft is shown in the following figure.

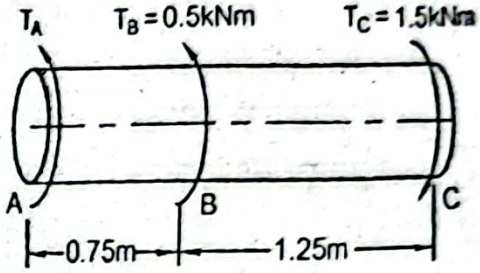

static equilibrium condition,

$$\sum M = 0$$

$$T_A + T_B - T_C = 0$$

or, $T_A + 0.5 - 1.5 = 0$

or, $T_A = 1.0kNm$

orque in the segment AB is lower than that in the segment BC. Therefore, the shearing ess in the segment BC will be maximum.

e have for the maximum shearing stress,

$$\tau_{max} = \frac{Tc}{J} = \frac{16T}{\pi d^3}$$

or, $\tau_a = 80 = \frac{16 \times 1.5 \times 10^6}{\pi d^3}$

or, $d = 45.7mm$

e have for the angle of twist at the free end of the shaft,

$$\phi_{C/A} = \phi_{C/B} + \phi_{B/A}$$

or, $\phi_a = \left(\frac{TL}{GJ}\right)_{BC} + \left(\frac{TL}{GJ}\right)_{AB}$

or, $\frac{4\pi}{180} = \frac{1.5 \times 10^6 \times 1.25 \times 32}{80 \times 10^3 \times \pi d^4} + \frac{(1.5 - 0.5) \times 10^6 \times 0.75 \times 10^3 \times 32}{80 \times 10^3 \times \pi d^4}$

or, $d = 46.78mm$

the diameter is lower than this value, angle of twist will be higher than 4^0. Therefore, required value of minimum shaft diameter,

$$d_{min} = 46.78mm \text{ } \textbf{Answer}$$

Problem P2.14:

A compound stepped shaft fabricated from steel and bronze is loaded by two ty moments as shown in Figure P2.14. The diameters of the steel and bronze segme respectively *60mm* and *55mm*. If the allowable shearing stress in steel is 8(allowable shearing stress in bronze is *40MPa* and angle of twist at the free end is l to 5^0, find the maximum value of torque T. Modulus of rigidity for steel and bron respectively *80GPa* and *35GPa*.

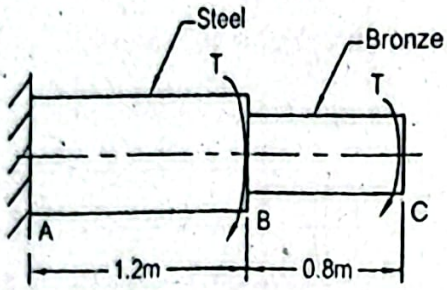

Figure P2.14

Given Data:

Diameter of steel segment, $d_{st} = 60mm$

Diameter of bronze segment, $d_{br} = 55mm$

Allowable shearing stress in steel segment, $\tau_{st_a} = 80MPa$

Allowable shearing stress in bronze segment, $\tau_{br_a} = 40MPa$

Limiting value of angle of twist at free end, $\phi_a = 5^0$

Modulus of rigidity for steel, $G_{st} = 80GPa$

Modulus of rigidity for bronze, $G_{br} = 35GPa$

To Find:

- Maximum torque, T

Solution:

Free body diagram of the entire shaft is shown in the following figure.

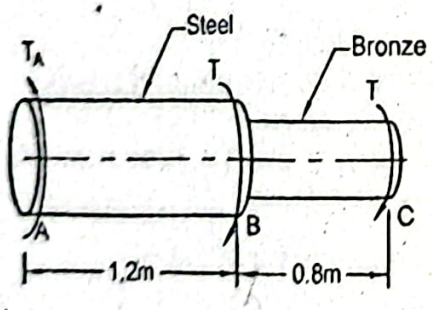

In static equilibrium condition,

$$\sum M = 0$$

$$\text{or, } T_A + T - T = 0$$

$$\text{or, } T_A = 2T$$

Shearing stress in the steel segment, $\tau_{st} = \dfrac{16T_{st}}{\pi d_{st}^3}$

$$\text{or, } \tau_{st_a} = 80 = \frac{16 \times 2T}{\pi \times 60^3}$$

$$\text{or, } T = 1.696 \times 10^6 \text{ Nm}$$
$$= 1.696 \text{kNm}$$

hearing stress in the bronze segment, $\tau_{br} = \frac{16T_{br}}{\pi d_{br}^3}$

$$\text{or, } \tau_{br_a} = 40 = \frac{16T}{\pi \times 55^3}$$

$$\text{or, } T = 1.307 \times 10^6 \text{ Nmm} = 1.307 \text{kNm}$$

ngle of twist at the free end of the shaft,

$$\phi_{C/A} = \phi_{C/B} + \phi_{B/A}$$

$$\text{or, } \phi_a = \left(\frac{TL}{GJ}\right)_{BC} + \left(\frac{TL}{GJ}\right)_{AB}$$

$$\text{or, } \frac{5\pi}{180} = \frac{T \times 0.8 \times 10^3 \times 32}{35 \times 10^3 \times \pi 55^4} + \frac{2T \times 1.2 \times 10^3 \times 32}{80 \times 10^3 \times \pi 60^4}$$

$$\text{or, } T = 1.78 \times 10^6 \text{ Nmm}$$
$$= 1.780 \text{kNm}$$

is seen that the limiting shearing stress will reach in the bronze segment first, therefore, e required value of maximum torque,

$$T = 1.307 \text{kNm } \textit{Answer}$$

oblem P2.15:

ree pulleys are connected by the solid steel shafts of diameters *40mm* and *50mm* as own in Figure P2.15. Determine the angle through which the pulley A rotates with pect to the (a) pulley B and (b) pulley C. Consider modulus of rigidity $G = 80GPa$.

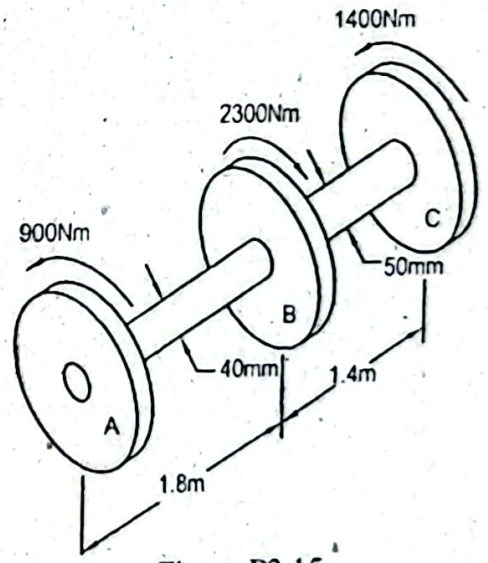

Figure P2.15

en Data:

ımeter of shaft, $d_{AB} = 40mm$

ımeter of shaft, $d_{BC} = 50mm$

ıgth of shaft, $L_{AB} = 1.8m$

Length of shaft, $L_{BC} = 1.4m$

Modulus of rigidity, $G_s = 80GPa$

To Find:

- Angles of twist, $\phi_{A/B}$ and $\theta_{A/C}$

Solution:

(a) Considering anticlockwise deformation as positive, the angle through w pulley A rotates with respect to the pulley B,

$$\theta_{A/B} = \left(\frac{TL}{GJ}\right)_{AB} = \frac{900\times10^3\times1.8\times10^3}{80\times10^3\times\frac{\pi\times40^4}{32}}$$

$$= 0.0806rad = 4.62^0 \ \textit{Answer}$$

(b) Angle through which the pulley A rotates with respect to the pulley C,

$$\theta_{A/C} = \phi_{A/B} + \phi_{B/C}$$

$$= \left(\frac{TL}{GJ}\right)_{AB} + \left(\frac{TL}{GJ}\right)_{BC}$$

$$= 0.0806 - \frac{1400\times10^3\times1.4\times10^3}{80\times10^3\times\frac{\pi\times50^4}{32}}$$

$$= 0.0806 - 0.0399 = 0.0407rad = 2.33^0 \ \textit{Answer}$$

Problem P2.16:

An aluminum shaft of diameter *45mm* is connected with four gears which are sub to torques as shown in Figure P2.16. Determine the relative angle of twist of the g with respect to the gear D if the modulus of rigidity $G = 30GPa$.

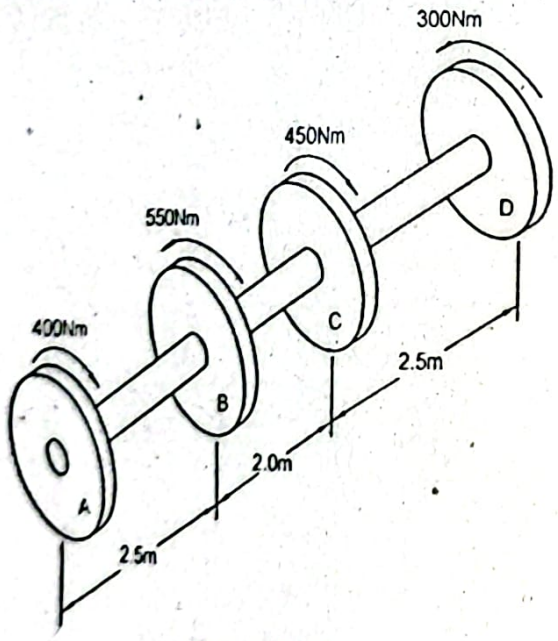

Figure P2.16

Given Data:

Diameter of shaft, $d = 45mm$

Length of shaft, $L_{AB} = 2.5m$

Length of shaft, $L_{BC} = 2m$

Length of shaft, $L_{CD} = 2.5m$

Modulus of rigidity, $G = 30GPa$

To Find:

- Angle of twist, $\phi_{A/D}$

Solution:

Polar moment of inertia,

$$J = \frac{\pi d^4}{32} = \frac{\pi \times 45^4}{32} mm^4 = 40.26 \times 10^4 mm^4$$

Considering clockwise deformation as positive, the angle of twist of the gear A with respect to the gear D,

$$\phi_{A/D} = \phi_{A/B} + \phi_{B/C} + \phi_{C/D}$$

$$= \left(\frac{TL}{GJ}\right)_{AB} + \left(\frac{TL}{GJ}\right)_{BC} + \left(\frac{TL}{GJ}\right)_{CD}$$

$$= \frac{400 \times 10^3 \times 2.5 \times 10^3}{30 \times 10^3 \times 40.26 \times 10^4} - \frac{150 \times 10^3 \times 2 \times 10^3}{30 \times 10^3 \times 40.26 \times 10^4} + \frac{300 \times 10^3 \times 2.5 \times 10^3}{30 \times 10^3 \times 40.26 \times 10^4}$$

$$= 0.12 rad = 6.88^0 \quad \textit{Answer}$$

Problem P2.17:

A steel shaft transmits power at $5Hz$ through the gears A, B and C as shown in Figure P2.17. The gear A receives $90kW$ of power while the gears B and C deliver respectively $30kW$ and $60kW$ of power. If the maximum shearing stresses developed in the segments AB and BC of the shaft reach to the limiting value of shearing stress $70MPa$ simultaneously, determine the diameters of the segments AB and BC of the shaft. Also determine the angle of twist of the gear A with respect to the gear C. Consider modulus of rigidity $G = 80GPa$.

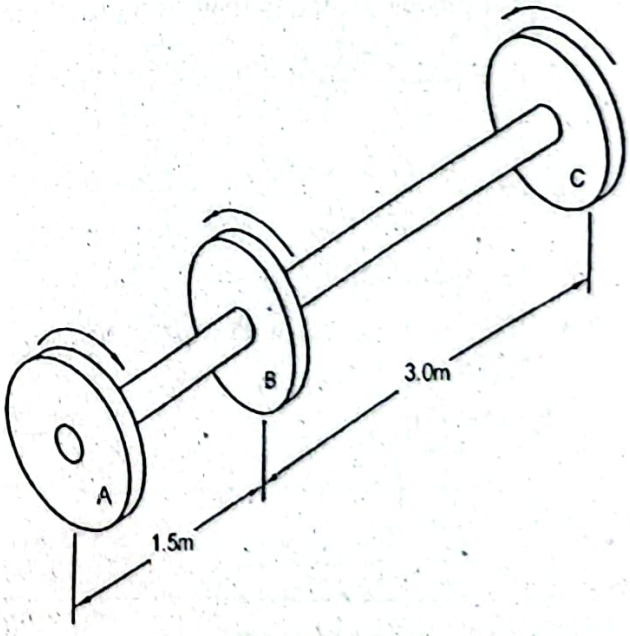

Figure P2.17

Given Data:

Frequency of shaft, $f = 5Hz$

Power received by gear A, $H_A = 90kW$

Power delivered by gear B, $H_B = 30kW$

Power delivered by gear C, $H_C = 60kW$

Allowable shearing stress, $\tau_a = 70MPa$

Modulus of rigidity, $G = 80GPa$

To Find:

- Diameter of segment AB, d_{AB}
- Diameter of segment BC, d_{BC}
- Angle of twist of gear A with respect to gear C, $\phi_{A/C}$

Solution:

Angular velocity, $\omega = 2\pi f = 2\pi \times 5 = 10\pi rad/s$

Torque at the gear A, $T_A = \frac{H_A}{\omega} = \frac{90}{10\pi} = 2.865kNm$

Torque at the gear B, $T_B = \frac{H_B}{\omega} = \frac{30}{10\pi} = 0.955kNm$

Torque at the gear C, $T_C = \frac{H_C}{\omega} = \frac{60}{10\pi} = 1.910kNm$

To find the diameter in the segment AB we may write the allowable shearing stress,

$$\tau_a = \frac{16T_A}{\pi d_{AB}^3}$$

$$\text{or, } 70 = \frac{16 \times 2.865 \times 10^6}{\pi \times d_{AB}^3}$$

$$\text{or, } d_{AB} = 59.29mm \text{ Answer}$$

To find the diameter in the segment BC we may write the allowable shearing stress,

$$\tau_a = \frac{16(T_A - T_B)}{\pi d_{BC}^3}$$

$$\text{or, } 70 = \frac{16 \times 1.910 \times 10^6}{\pi \times d_{BC}^3}$$

$$\text{or, } d_{BC} = 51.80mm \text{ Answer}$$

Now to find the angle of twist of the gear A with respect to the gear C,

$$\phi_{A/C} = \phi_{A/B} + \phi_{B/C}$$

$$= \left(\frac{TL}{GJ}\right)_{AB} + \left(\frac{TL}{GJ}\right)_{BC}$$

$$= \frac{2.865 \times 10^6 \times 1.5 \times 10^3 \times 32}{80 \times 10^3 \times \pi \times 59.29^4} + \frac{1.910 \times 10^6 \times 3 \times 10^3 \times 3}{80 \times 10^3 \times \pi \times 51.80^4}$$

$$= 0.1456rad = 8.34^0 \text{ Answer}$$

Problem P2.18:

A $4m$ long solid circular steel shaft of constant diameter transmits power at $300rpm$ through gears as shown in Figure P2.18. Two gears placed at the extreme ends of the shaft deliver $40kW$ and $60kW$ of power while a gear at the mid point of the shaft receives $100kW$ of power. If the allowable shearing stress in the shaft is $75MPa$, determine the minimum diameter of the shaft and the corresponding angle of twist of one gear with respect to the other at the extreme ends. Consider modulus of rigidity $G = 80GPa$.

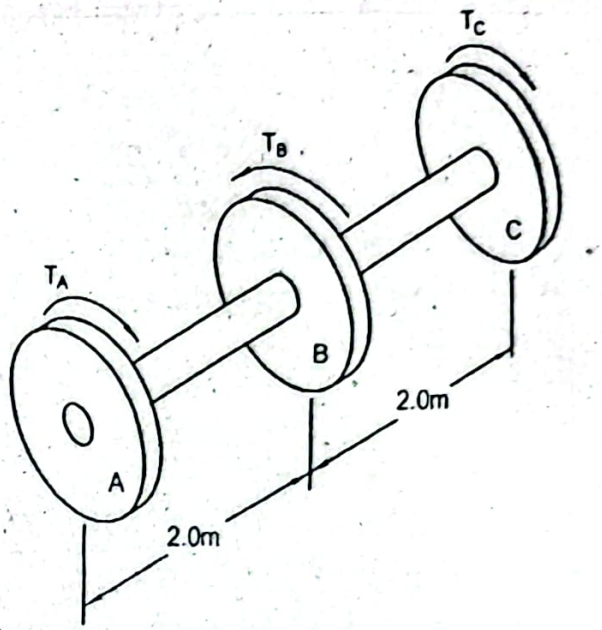

Figure P2.18

Given Data:

Length of shaft, $L = 4m$

Speed of shaft, $n = 300rpm$

Power of gear A at extreme end, $H_A = 40kW$

Power of gear C at extreme end, $H_C = 60kW$

Power of gear B at mid point, $H_B = 100kW$

Allowable shearing stress in shaft, $\tau_a = 75MPa$

Modulus of rigidity, $G = 80GPa$

To Find:

Minimum diameter of shaft, d

Angle of twist of one gear with respect to other at the extreme ends, $\phi_{C/A}$

Solution:

Angular velocity of shaft, $\omega = \dfrac{2\pi n}{60} = \dfrac{2\pi \times 300}{60} = 31.416 rad/s$

Torque of the gear A that delivers $40kW$ of power,

$$T_A = \frac{H_A}{\omega} = \frac{40}{31.416} = 1.273kNm$$

Torque of the gear C that delivers $60kW$ of power,

$$T_C = \frac{H_C}{\omega} = \frac{60}{31.416} = 1.910kNm$$

Torque of the gear B that receives $100kW$ of power,

$$T_B = \frac{H_B}{\omega} = \frac{100}{31.416} = 3.183kNm$$

Torque in the segment AB of the shaft is $1.273kNm$ while that in the segmen $1.910kNm$. Therefore, the shearing stress is maximum in the segment BC of the s

Maximum shearing stress on the top surface of the shaft,

$$\tau_{max} = \frac{16T}{\pi d^3}$$

$$\text{or, } \tau_a = 75 = \frac{16 \times 1.91 \times 10^6}{\pi \times d^3}$$

$$\text{or, } d = 50.62mm \text{ Answer}$$

Angle of twist of the gear C with respect to the gear A,

$$\phi_{C/A} = \phi_{C/B} + \phi_{B/A}$$

$$= \left(\frac{TL}{GJ}\right)_{BC} + \left(\frac{TL}{GJ}\right)_{AB}$$

$$= \frac{1.910 \times 10^6 \times 2 \times 10^3 \times 32}{80 \times 10^3 \times \pi \times 50.62^4} - \frac{1.273 \times 10^6 \times 2 \times 10^3 \times}{80 \times 10^3 \times \pi \times 50.62}$$

$$= 0.0247rad = 1.42^0 \text{ Answer}$$

Problem P2.19:

A composite shaft is fabricated from a solid steel shaft of diameter $50mm$ and a h aluminum shaft of inside diameter of $50mm$ and outside diameter of $75mm$. The steel shaft slides freely thro[illegible]he hollow aluminum shaft. Both the shafts have the length. The two shafts are fastened rigidly at the ends and then a torque of $2.5kN$ applied. Determine the shearing stress at the outer fiber of the aluminum shaft and extreme fiber of the steel shaft. Modulus of rigidity of steel and aluminum respectively $80GPa$ and $30GPa$.

Given Data:

Diameter of solid steel shaft, $d = 50mm$

Outside diameter of aluminum shaft, $d_o = 75mm$

Inside diameter of aluminum shaft, $d_i = 50mm$

Applied torque, $T = 2.5kNm$

Modulus of rigidity of steel, $G_s = 80GPa$

Modulus of rigidity of aluminum, $G_{al} = 30GPa$

To Find:

- Shearing stress of outer fiber of aluminum shaft, τ_{al}
- Shearing stress at extreme fiber of steel shaft, τ_s

Solution:

Let the torque carried by the steel shaft be T_{st} and the torque carried by the aluminum shaft be T_{al}.

Then in static equilibrium condition the total torque,

$$T = T_{st} + T_{al}$$

$$\text{or, } T_{st} + T_{al} = 2.5kNm \qquad (i)$$

Since the two shafts are rigidly fastened together, the angle of twist of both the shafts will be same, that is, $\phi_{st} = \phi_{al}$

$$\text{or, } \left(\frac{TL}{GJ}\right)_{st} = \left(\frac{TL}{GJ}\right)_{al}$$

$$\text{or, } \frac{T_{st} \times L \times 32}{80 \times 10^3 \times \pi \times 50^4} = \frac{T_{al} \times L \times 32}{30 \times 10^3 \times \pi \times (75^4 - 50^4)}$$

$$\text{or, } T_{st} = 0.6564 T_{al} \qquad (ii)$$

Substituting this value in Equation (i),

$$0.6564 T_{al} + T_{al} = 2.5$$

$$\text{or, } T_{al} = 1.509kNm$$

Therefore, $T_{st} = 0.991kNm$

Shearing stress at the outer fiber of the aluminum shaft,

$$\tau_{al} = \frac{T_{al} \times d_o / 2}{\frac{\pi}{32}\left[d_o^4 - d_i^4\right]}$$

$$= \frac{16 \times 1.509 \times 10^{6} \times 75}{\pi\left[75^4 - 50^4\right]} = 22.70MPa \textbf{ Answer}$$

Shearing stress at the extreme fiber of the steel shaft.

$$\tau_{st} = \frac{16T_{st}}{\pi d^3} = \frac{16 \times 0.991 \times 10^6}{\pi \times 50^3} = 40.38MPa \textbf{ Answer}$$

Problem P2.20:

A composite shaft is made of a solid steel shaft of diameter $60mm$ and a hollow bronze shaft of inside diameter of $60mm$ and outside diameter of $80mm$. The solid steel shaft slides freely through the hollow bronze shaft. Both the shafts have the same length. The two shafts are fastened rigidly at the ends and then a torque is applied. If the maximum shearing stress in the steel shaft and that in the bronze shaft are not to exceed $75MPa$ and $50MPa$ respectively, determine the maximum torque that can be applied. Modulus of rigidity of bronze and steel are respectively $35GPa$ and $80GPa$.

Given Data:

Diameter of solid steel shaft, $d_{st} = 60mm$

Outside diameter of bronze shaft, $d_o = 80mm$

Inside diameter of bronze shaft, $d_i = 60mm$

Allowable shearing stress in steel, $\tau_{st_a} = 75MPa$

Allowable shearing stress in bronze, $\tau_{br_a} = 50MPa$

Modulus of rigidity of steel, $G_{st} = 80GPa$

Modulus of rigidity of bronze, $G_{br} = 35GPa$

To Find:

- Maximum torque applied, T

Solution:

Since the steel and bronze shafts are rigidly fastened together, the total torque appli

$$T = T_{st} + T_{br}$$

where, T_{st} = Torque carried by steel shaft

and T_{br} = Torque carried by bronze shaft.

As the steel and bronze shafts are rigidly fastened together, the angle of twist of bc shafts will be same. That is, $\phi_{st} = \phi_{br}$

$$\text{or, } \left(\frac{TL}{GJ}\right)_{st} = \left(\frac{TL}{GJ}\right)_{br}$$

$$\text{or, } \frac{T_{st} \times L \times 32}{80 \times 10^3 \times \pi \times 60^4} = \frac{T_{br} \times L \times 32}{35 \times 10^3 \times \pi \times \left(80^4 - 60^4\right)}$$

$$\text{or, } T_{st} = 1.058 T_{br}$$

Maximum shearing stress in the steel shaft,

$$\tau_{st} = \frac{16 T_{st}}{\pi d_{st}^3}$$

$$\text{or, } \tau_{st_a} = 75 = \frac{16 T_{st}}{\pi \times 60^3}$$

$$\text{or, } T_{st} = 3.181 \times 10^6 Nmm = 3.181 kNm$$

Maximum shearing stress in the bronze shaft,

$$\tau_{br} = \frac{T_{br} \times d_o / 2}{\frac{\pi}{32}\left[d_o^4 - d_i^4\right]}$$

$$\text{or, } \tau_{br_a} = 50 = \frac{T_{br} \times 16 \times 10^6 \times 80}{\pi\left[80^4 - 60^4\right]}$$

$$\text{or, } T_{br} = 3.436 kNm$$

Limiting torque in the steel shaft and that in the bronze shaft are,

$$T_{st} = 3.181 kNm \text{ and } T_{br} = 3.436 kNm$$

If the limiting shearing is reached in steel, then torque in bronze shaft is obtained substituting value of T_{st} in Equation *(ii)*,

$$T_{br} = \frac{T_{st}}{1.058} = \frac{3.181}{1.058} = 3.007 kNm$$

This value is less than the limiting value of torque in bronze.

Therefore, the required maximum torque from Equation (*i*),

$$T = T_{st} + T_{br}$$
$$= 3.181 + 3.007$$
$$= 6.19kNm \text{ Answer}$$

Problem P2.21:

A compound shaft made of aluminum and steel are attached to the rigid supports as shown in Figure P2.21. The diameters of the aluminum and steel segments are respectively *80mm* and *60mm*. Modulus of rigidity for aluminum and steel are respectively *30GPa* and *80GPa*. If a torque of *3kNm* is applied at the junction point B, determine the maximum shearing stresses in aluminum and steel segments.

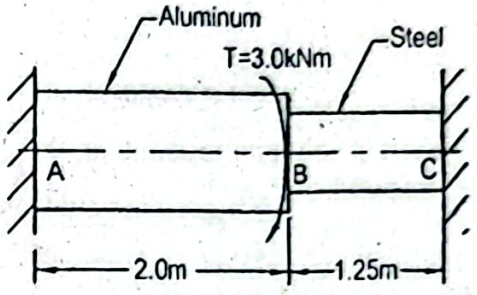

Figure P2.21

Given Data:

Diameter of aluminum segment, $d_{al} = 80mm$

Diameter of steel segment, $d_{st} = 60mm$

Applied torque at junction point, $T = 3kNm$

Modulus of rigidity for steel, $G_{st} = 80GPa$

Modulus of rigidity for aluminum, $G_{al} = 30GPa$

To Find:

- Maximum shearing stress in aluminum segment. τ_{al}
- Maximum shearing stress in steel segment, τ_{st}

Solution:

Free body diagram of the entire shaft is shown in the following figure.

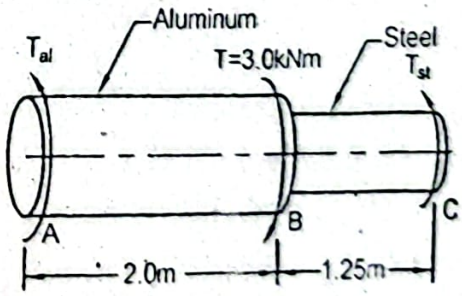

In static equilibrium condition,

$$\sum M = 0$$
$$\text{or, } T_{al} + T_{st} - T = 0$$
$$\text{or, } T_{al} + T_{st} = T = 3kNm \qquad (i)$$

Angle of twist of section B with respect to section A will be equal to the angle of t section B with respect to C. That is,

$$\phi_{B/A} = \phi_{B/C}$$

$$\text{or, } \left(\frac{TL}{GJ}\right)_{AB} = \left(\frac{TL}{GJ}\right)_{BC}$$

$$\text{or, } \frac{T_{al} \times 2 \times 10^3 \times 32}{30 \times 10^3 \times \pi \times 80^4} = \frac{T_{st} \times 1.25 \times 10^3 \times 32}{80 \times 10^3 \times \pi \times 60^4}$$

$$\text{or, } T_{al} = 0.741 T_{st}$$

Substituting the value of T_{al} in Equation (i),

$$0.741 T_{st} + T_{st} = 3$$

$$\text{or, } T_{st} = 1.723 kNm$$

Therefore, $T_{al} = 3 - 1.723 = 1.277 kNm$

Maximum shearing stress in the aluminum segment,

$$\tau_{al} = \left(\frac{Tc}{J}\right)_{al} = \frac{16T_{al}}{\pi d_{al}^3} = \frac{16 \times 1.277 \times 10^6}{\pi \times 80^3} = 12.70 MPa \text{ Answer}$$

Maximum shearing stress in the steel segment,

$$\tau_{st} = \left(\frac{Tc}{J}\right)_{st} = \frac{16T_{st}}{\pi d_{st}^3} = \frac{16 \times 1.723 \times 10^6}{\pi \times 60^3} MPa = 40.63 MPa \text{ Answ}$$

Problem P2.22:

A *50mm* diameter steel shaft ABC with its both ends fixed has solid section between and hollow section between BC as shown in Figure P2.22. The internal diameter of hollow section is *0.8* times the external diameter. Determine the reactive torques at fixed ends of the shaft, if a torque of *1.5kNm* is applied at the section B

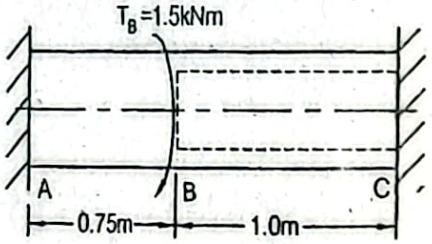

Figure P2.22

Given Data:

External diameter of shaft, $d = d_o = 50mm$

Internal diameter of shaft, $d_i = 0.8 d_o \, mm$

Length of solid segment AB, $L_{AB} = 0.75m$

Length of hollow segment BC, $L_{BC} = 1.0m$

Torque applied, $T = 1.5kNm$

To Find:

- Reactive torques, T_A and T_C

Solution:

Free body diagram of the entire shaft is shown in the following figure.

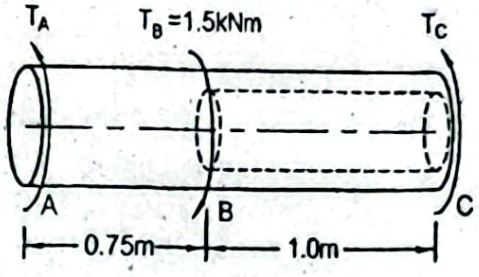

In static equilibrium condition,

$$\sum M = 0$$

$$\text{or, } T_A + T_C - T_B = 0$$

$$\text{or, } T_A + T_C = T_B = 1.5kNm \qquad (i)$$

Since the shaft is restrained at its both ends, we can write,

$$\phi_{B/A} = \phi_{B/C}$$

$$\text{or, } \left(\frac{TL}{GJ}\right)_{AB} = \left(\frac{TL}{GJ}\right)_{BC} \qquad (ii)$$

But the polar moment of inertia, $J_{AB} = \frac{\pi d^4}{32} = \frac{\pi \times 50^4}{32} mm^4$

$$= 613.59 \times 10^3 mm^4$$

and the polar moment of inertia, $J_{BC} = \frac{\pi}{32}\left[d_o^4 - d_i^4\right]$

$$= \frac{\pi}{32}\left[50^4 - 40^4\right] mm^4$$

$$= 362.26 \times 10^3 mm^4$$

Now substituting these values in Equation *(ii)*,

$$\frac{T_A \times 0.75 \times 10^3}{G \times 613.59 \times 10^3} = \frac{T_C \times 1.0 \times 10^3}{G \times 362.26 \times 10^3}$$

$$\text{or, } T_A = 2.258 T_C$$

Substituting the value of T_A in Equation *(i)*,

$$2.258 T_C + T_C = 1.5$$

$$\text{or, } T_C = 0.46kNm \text{ Answer}$$

$$\text{and, } T_A = 2.258 \times 0.46kNm = 1.04kNm \text{ Answer}$$

Problem P2.23:

A compound shaft made of brass and steel is attached to rigid supports as shown in Figure P2.23. The diameters in the brass and steel segments are respectively *60mm* and *50mm*. If the allowable shearing stresses in the brass and steel segments are respectively *40MPa* and *75MPa*, determine the maximum torque that can be applied. Modulus of rigidity for brass and steel are respectively *40GPa* and *80GPa*.

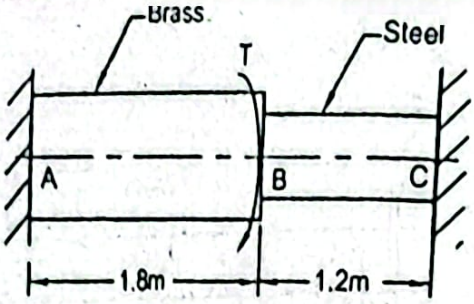

Figure P2.23

Given Data:

Diameter of brass segment, $d_{br} = 60mm$

Diameter of steel segment, $d_{st} = 50mm$

Allowable shearing stress in brass, $\tau_{br_a} = 40MPa$

Allowable shearing stress in steel, $\tau_{st_a} = 75MPa$

Modulus of rigidity for brass, $G_{br} = 40MPa$

Modulus of rigidity for steel, $G_{st} = 80MPa$

To Find:

- Maximum torque that can be applied, T

Solution:

Free body diagram of the entire shaft is shown in the following figure.

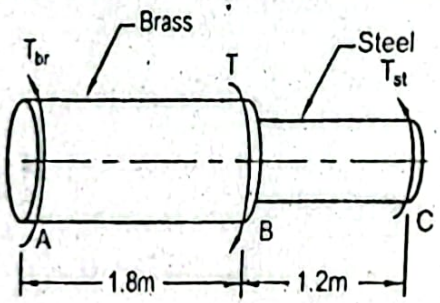

In static equilibrium condition,

$$\sum M = 0$$

$$\text{or, } T_{br} + T_{st} - T = 0$$

$$\text{or, } T_{br} + T_{st} = T$$

Angle of twist at the point of application of torque will be same. That is,

$$\phi_{B/A} = \phi_{B/c}$$

$$\text{or, } \left(\frac{TL}{GJ}\right)_{br} = \left(\frac{TL}{GJ}\right)_{st}$$

$$\text{or, } \frac{T_{br} \times 1.8 \times 10^3 \times 32}{40 \times 10^3 \times \pi \times 60^4} = \frac{T_{st} \times 1.2 \times 10^3 \times 32}{80 \times 10^3 \times \pi \times 50^4}$$

$$\text{or, } T_{br} = 0.6912 T_{st}$$

If the maximum shearing stress in the brass segment reaches to its limiting value,

$$\tau_{br} = \frac{16T_{br}}{\pi d_{br}^3}$$

or, $\tau_{br_a} = 40 = \frac{16 \times T_{br}}{\pi \times 60^3}$

or, $T_{br} = 1.696 \times 10^6\ Nmm$

$= 1.696kNm$

If the maximum shearing stress in the steel segment reaches to its limiting value.

$$\tau_{st} = \frac{16T_{st}}{\pi d_{st}^3}$$

or, $\tau_{st_a} = 75 = \frac{16 \times T_{st}}{\pi \times 50^3}$

or, $T_{st} = 1.841 \times 10^6\ Nmm$

$= 1.841kNm$

If for the applied torque the limiting shearing stress reaches to the steel segment, then from Equation *(ii)*, $T_{br} = 0.6912 \times 1.841kNm = 1.272kNm$

This value is less than the limiting torque in the brass segment.

Therefore, the maximum torque that can be applied from Equation *(i)*,

$T = 1.841 + 1.272 = 3.113kNm$ ***Answer***

Problem P2.24:

A compound shaft made of bronze and steel is attached to rigid supports at its ends as shown in Figure P2.24. Maximum shearing stresses in bronze and steel segments are limited to *50MPa* and *80MPa* respectively. When a torque of *15kNm* is applied at B, shearing stresses in the bronze and steel segments reach to their limiting values simultaneously. Determine the diameters of each segment in this condition. Modulus of rigidity for bronze and steel are respectively *35GPa* and *80GPa*.

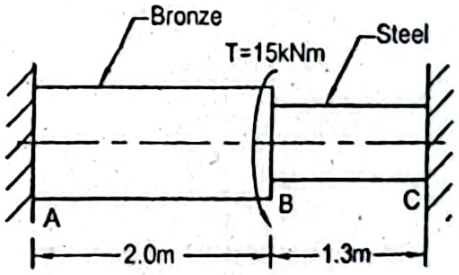

Figure P2.24

Given Data:

Length of bronze segment, $L_{br} = 2m$

Length of steel segment, $L_{st} = 1.3m$

Applied torque, $T = 15kNm$

Limiting shearing stress in bronze, $\tau_{br_a} = 50MPa$

Limiting shearing stress in steel, $\tau_{st_a} = 80MPa$

Modulus of rigidity for bronze, $G_{br} = 35GPa$

Modulus of rigidity for steel, $G_{st} = 80MPa$

To Find:

- Diameter of bronze segment, d_{br}
- Diameter of steel segment, d_{st}

Solution:

Free body diagram of the entire shaft is shown in the following figure.

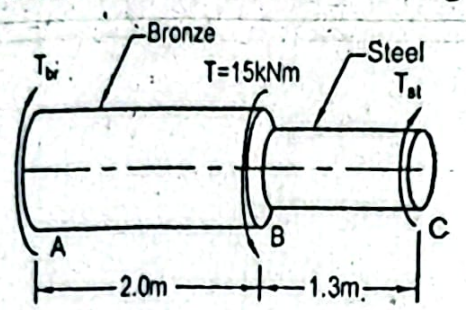

In static equilibrium condition,

$$\sum M = 0$$

$$\text{or, } T_{br} + T_{st} - T = 0$$

$$\text{or, } T_{br} + T_{st} = T = 15 \times 10^6$$

Here, T_{br} and T_{st} are the resisting torques.

Angle of twist at B will be same, that is,

$$\phi_{B/A} = \phi_{B/C}$$

$$\text{or, } \left(\frac{TL}{GJ}\right)_{AB} = \left(\frac{TL}{GJ}\right)_{BC}$$

$$\text{or, } \frac{T_{br} \times 2 \times 10^3 \times 32}{35 \times 10^3 \times \pi \times d_{br}^4} = \frac{T_{st} \times 1.3 \times 10^3 \times 32}{80 \times 10^3 \times \pi \times d_{st}^4}$$

$$\text{or, } \frac{T_{br}}{T_{st}} = \frac{d_{br}^4}{3.516 d_{st}^4}$$

Maximum shearing stress in the bronze segment,

$$\tau_{br_{max}} = \left(\frac{Tc}{J}\right)_{br} = \frac{16T_{br}}{\pi d_{br}^3}$$

$$\text{or, } \tau_{br_a} = 50 = \frac{16 \times T_{br}}{\pi \times d_{br}^3}$$

$$\text{or, } T_{br} = 9.817 d_{br}^3$$

Maximum shearing stress in the steel segment,

$$\tau_{st_{max}} = \left(\frac{Tc}{J}\right)_{st} = \frac{16T_{st}}{\pi d_{st}^3}$$

$$\text{or, } \tau_{st_a} = 80 = \frac{16 \times T_{st}}{\pi \times d_{st}^3}$$

$$\text{or, } T_{st} = 15.708 d_{st}^3$$

Substituting the values of T_{br} and T_{st} in Equation *(ii)*,

$$\frac{9.817d_{br}^3}{15.708d_{st}^3} = \frac{d_{br}^4}{3.516d_{st}^4}$$

$$\text{or, } d_{st} = 0.455d_{br} \qquad (v)$$

Substituting the values of T_{br} and T_{st} in Equation *(i)*,

$$9.817d_{br}^3 + 15.708d_{st}^3 = 15\times10^6$$

Now substituting the value of d_{st} from Equation *(v)*,

$$9.817d_{br}^3 + 15.708(0.455)^3 d_{br}^3 = 15\times10^6$$

$$\text{or, } d_{br} = 109.91mm \textbf{ Answer}$$

Therefore, $d_{st} = 0.455\times109.91mm = 50.01mm$ **Answer**

Problem P2.25:

A compound shaft of aluminum and steel is attached to the rigid supports as shown in Figure P2.25. The diameter of the aluminum segment is *90mm* and that of the steel segment is *65mm*. Limiting shearing stress in aluminum is *55MPa* and that in steel is *75MPa*. Modulus of rigidity for aluminum and steel are respectively *30GPa* and *80GPa*. Determine the maximum torque that can be applied at the junction point B, so that limiting shearing stress in both the materials reach simultaneously. Also find the ratio L_{al}/L_{st}.

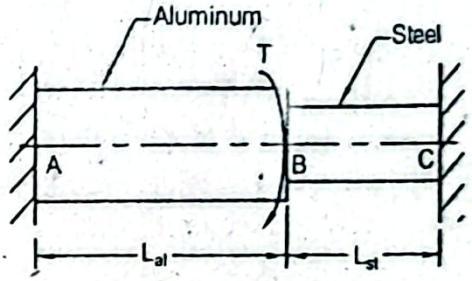

Figure P2.25

Given Data:

Diameter of aluminum segment, $d_{al} = 90mm$

Diameter of steel segment, $d_{st} = 65mm$

Limiting shearing stress in aluminum, $\tau_{al_a} = 55MPa$

Limiting shearing stress in steel, $\tau_{st_a} = 75MPa$

Modulus of rigidity for aluminum, $G_{al} = 30GPa$

Modulus of rigidity for steel, $G_{st} = 80MPa$

To Find:

- Applied torque, T
- Ratio of L_{al}/L_{st}

Solution:

Free body diagram of the entire shaft is shown in the following figure.

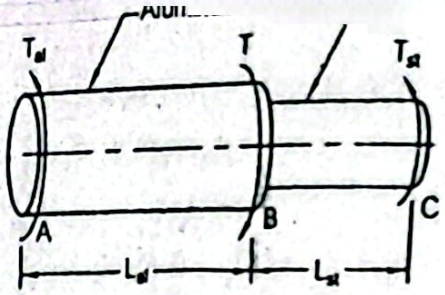

In static equilibrium condition,

$$\sum M = 0$$

$$\text{or, } T_{al} + T_{st} - T = 0$$

$$\text{or, } T_{al} + T_{st} = T$$

When the maximum shearing stress in the aluminum segment reaches to the l value,

$$\tau_{al_a} = \frac{16T_{al}}{\pi d_{al}^3}$$

$$\text{or, } 55 = \frac{16 \times T_{al}}{\pi \times 90^3}$$

$$\text{or, } T_{al} = 7.873 \times 10^6 \, Nmm$$

When the maximum shearing stress in the steel segment reaches to the limiting val

$$\tau_{st_a} = \frac{16T_{st}}{\pi d_{st}^3}$$

$$\text{or, } 75 = \frac{16 \times T_{st}}{\pi \times 65^3}$$

$$\text{or, } T_{st} = 4.044 \times 10^6 \, Nmm$$

Angle of twist of the section B with respect to the section A will be equal to the an twist of the section B with respect to the section C. That is,

$$\phi_{B/A} = \phi_{B/C}$$

$$\text{or, } \left(\frac{TL}{GJ}\right)_{AB} = \left(\frac{TL}{GJ}\right)_{BC}$$

$$\text{or, } \frac{T_{al} \times L_{al}}{G_{al} \times J_{al}} = \frac{T_{st} \times L_{st}}{G_{st} \times J_{st}}$$

$$\text{or, } \frac{T_{al} \times L_{al} \times 32}{30 \times 10^3 \times \pi \times 90^4} = \frac{T_{st} \times L_{st} \times 32}{80 \times 10^3 \times \pi \times 65^4}$$

Now substituting the values of T_{al} and T_{st} we find,

$$\frac{7.873 \times 10^6 \times L_{al} \times 32}{30 \times 10^3 \times \pi \times 90^4} = \frac{4.044 \times 10^6 \times L_{st} \times 32}{80 \times 10^3 \times \pi \times 65^4}$$

$$\text{or, } \frac{L_{al}}{L_{st}} = 0.708 \; \textit{Answer}$$

Substituting the values of T_{al} and T_{st} in Equation (i),

$$7.873 \times 10^6 + 4.044 \times 10^6 = T$$

or, $T = 11.92kNm$ *Answer*

Problem P2.26:
A solid circular steel shaft fixed at its both ends is loaded by two equal and opposing couples of $10kNm$ as shown in Figure P2.26. Determine the diameter of the shaft, if the maximum shearing stress in the shaft is limited to $60MPa$.

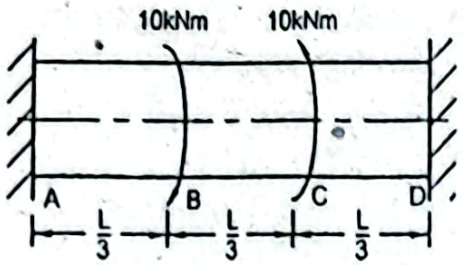

Figure P2.26

Given Data:
Applied torque, $T_B = 10kNm$
Applied torque, $T_C = 10kNm$
Limiting shearing stress, $\tau_a = 60MPa$

To Find:
- Diameter of shaft, d

Solution:
Free body diagram of the entire shaft is shown in the following figure.

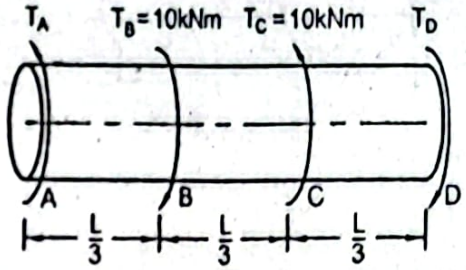

In static equilibrium condition,

$$\sum M = 0$$
$$\text{or, } T_A - T_B + T_C - T_D = 0$$
$$\text{or, } T_A - 10 + 10 - T_D = 0$$
$$\text{or, } T_A = T_D \qquad (i)$$

Since the shaft is restrained at its both ends, the angle of twist of the section D with respect to the section A will be zero. That is,

$$\phi_{D/A} = \phi_{B/A} + \phi_{C/B} + \phi_{D/C}$$
$$\text{or, } \phi_{D/A} = \left(\frac{TL}{GJ}\right)_{AB} + \left(\frac{TL}{GJ}\right)_{BC} + \left(\frac{TL}{GJ}\right)_{CD}$$
$$\text{or, } 0 = \frac{T_A \times L/3}{GJ} + \frac{(T_A - T_B) \times L/3}{GJ} + \frac{(T_A - T_B + T_C) \times L/3}{GJ}$$
$$\text{or, } T_A + T_A - T_B + T_A - T_B + T_C = 0$$

or, $3T_A = 10$

or, $T_A = 3.33kNm$

Therefore, from Equation (i) $T_D = 3.33kNm$

Torque in the segment AB, $T_A = 3.33kNm$

Torque in the segment BC, $T_A - T_B = (3.33 - 10)\,kiNm = -6.67kNm$

Torque in the segment CD, $T_D = 3.33kNm$

That is, the maximum torque occurs in the segment BC.

Therefore, the maximum shearing stress,

$$\tau_{max} = \frac{16T}{\pi d^3}$$

$$\text{or, } \tau_a = 60 = \frac{16 \times 6.67 \times 10^6}{\pi \times d^3}$$

$$\text{or, } d = 82.73mm \text{ Answer}$$

Problem P2.27:

A $3.5m$ long circular shaft of diameter $100mm$ is fixed at its both ends as shov Figure P2.27. The shaft is loaded by the twisting moments of $1.5kNm$ and $3k$ Determine the resisting torques at the fixed ends.

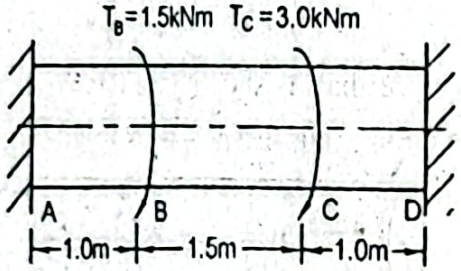

Figure P2.27

Given Data:

Length of shaft, $L = 3.5m$

Diameter of shaft, $d = 100mm$

Applied torque at B, $T_B = 1.5kNm$

Applied torque at C, $T_C = 3kNm$

To Find:

- Resisting torques, T_A and T_D

Solution:

Free body diagram of the entire shaft is shown in the following figure.

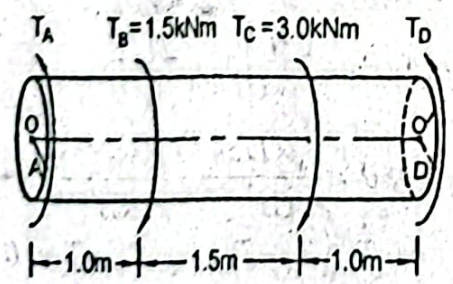

In static equilibrium condition,

$$\sum M = 0$$

$$\text{or, } T_A - T_B - T_C + T_D = 0$$

$$\text{or, } T_A - T_D = T_B + T_C$$

$$\text{or, } T_A + T_D = (1.5 + 3)kNm = 4.5kNm \qquad (i)$$

Since the ends of the shaft are restrained, the angle of twist $\phi_{D/A}$ will be equal to zero. Therefore,

$$\phi_{D/A} = \phi_{B/A} + \phi_{C/B} + \phi_{D/C}$$

$$\text{or, } 0 = \left(\frac{TL}{GJ}\right)_{AB} + \left(\frac{TL}{GJ}\right)_{BC} + \left(\frac{TL}{GJ}\right)_{CD}$$

$$\text{or, } 0 = \frac{T_A \times 1.0}{GJ} + \frac{(T_A - T_B)\times 1.5}{GJ} + \frac{(T_A - T_B - T_C)\times 1.0}{GJ}$$

$$\text{or, } T_A + 1.5T_A - 1.5T_B + T_A - T_B - T_C = 0$$

$$\text{or, } 3.5T_A = 2.5T_B + T_C$$

$$\text{or, } T_A = 0.7143T_B + 0.2857T_C \qquad (ii)$$

Substituting the value of T_A in Equation (i),

$$0.7143T_B + 0.2857T_C + T_D = 4.5$$

$$\text{or, } T_D = 4.5 - 0.7143\times 1.5 - 0.2857\times 3$$

$$\text{or, } T_D = 2.5715kNm \text{ Answer}$$

From Equation (ii) we have, $T_A = 0.7143T_B + 0.2857T_C$

$$\text{or, } T_A = 0.7143\times 1.5 + 0.2857\times 3$$

$$\text{or, } T_A = 1.9286kNm \text{ Answer}$$

Variation of the torque with the length is shown as follows.

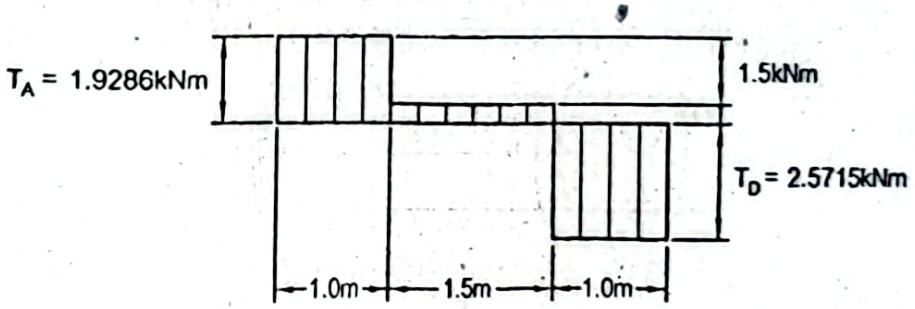

Bending moment diagram

Typical position of the fiber at the top surface of the shaft after deformation is shown below.

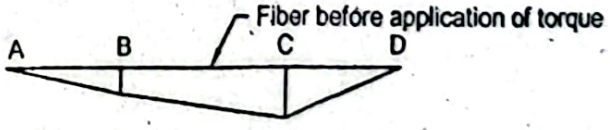

Different segments of the shaft after twist are shown as follows.

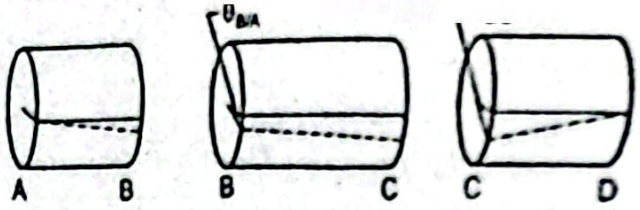

Problem P2.28:

A *100mm* diameter steel shaft with its both ends fixed is subjected to two equal $T = 10kNm$ placed symmetrically at the middle of the shaft as shown in Figure Determine the angle of twist of the mid-section E of the shaft. Consider mod rigidity for steel $G = 80GPa$.

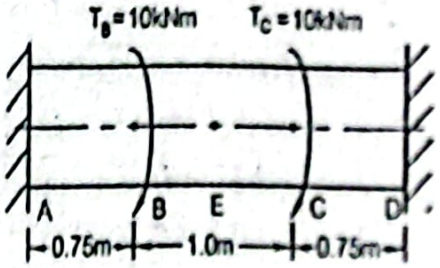

Figure P2.28

Given Data:

Diameter of shaft, $d = 100mm$

Applied torque, $T_B = T_C = 10kNm$

Modulus of rigidity for steel, $G = 80GPa$

To Find:

- Angle of twist of mid-section, $\phi_{E/A}$

Solution:

Free body diagram of the entire shaft is shown in the following figure

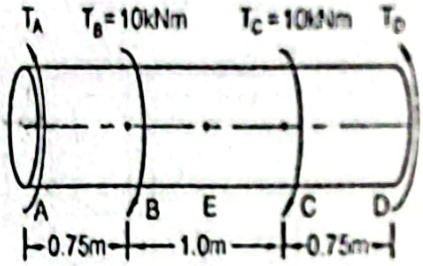

In static equilibrium condition,

$$\sum M = 0$$

$$\text{or, } T_A - T_B - T_C + T_D = 0$$

$$\text{or, } T_A + T_D = T_B + T_C = 10 + 10 = 20kNm$$

For the symmetric torques, $T_A = T_D$

Therefore, $T_A = T_D = 20/2kNm = 10kNm$

Angle of twist of the mid-section E with respect to A,

$$\phi_{E/A} = \phi_{B/A} + \phi_{E/B}$$

$$= \left(\frac{TL}{GJ}\right)_{AB} + \left(\frac{TL}{GJ}\right)_{BC}$$

$$= \frac{10\times10^{6}\times0.75\times10^{-1}\times32}{80\times10^{9}\times\pi\times100^{4}} + 0$$

$$= 0.00955 rad = 0.55^{0} \quad Answer$$

Problem P2.29:

A circular shaft of constant diameter with the fixed ends is loaded by the two twisting moments $2.5kNm$ and $3.5kNm$ as shown in Figure P2.29. Determine the resisting torques at the fixed ends.

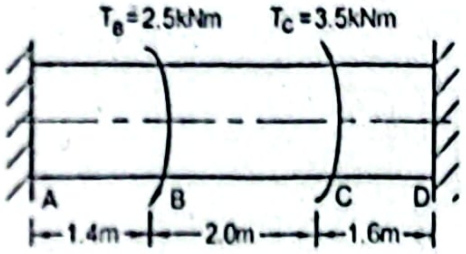

Figure P2.29

Given Data:

Length of shaft, $L = 5m$

Applied torque, $T_B = 2.5kNm$

Applied torque, $T_C = 3.5kNm$

To Find:

Resisting torques at fixed ends, T_A and T_D

Solution:

Free body diagram of the circular shaft is shown in the following figure.

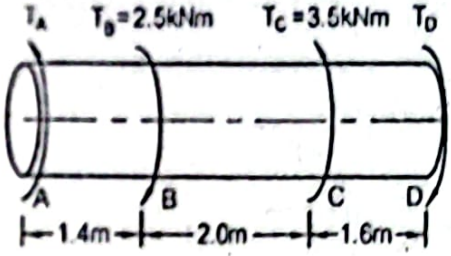

Static equilibrium condition,

$$\sum M = 0$$

$$\text{or, } T_A - T_B + T_C - T_D = 0$$

$$\text{or, } T_A - T_D = T_B - T_C = (2.5 - 3.5) = -1.0kNm \qquad (i)$$

Angle of twist $\phi_{D/A}$ will be zero, since the ends of the shaft are restricted. Therefore,

$$\phi_{D/A} = \phi_{B/A} + \phi_{C/B} + \phi_{D/C}$$

$$\text{or, } 0 = \left(\frac{TL}{GJ}\right)_{AB} + \left(\frac{TL}{GJ}\right)_{BC} + \left(\frac{TL}{GJ}\right)_{CD}$$

$$\text{or, } 0 = \frac{T_A \times 1.4}{GJ} + \frac{(T_A - T_B)}{GJ} + \frac{\quad}{GJ} \times 1.6$$

$$\text{or, } 1.4T_A + 2T_A - 2T_B + 1.6T_A - 1.6T_B + 1.6T_C = 0$$

$$\text{or, } 5T_A = 3.6T_B - 1.6T_C$$

$$\text{or, } T_A = 0.72T_B - 0.32T_C$$

$$\text{or, } T_A = 0.72 \times 2.5 - 0.32 \times 3.5 = 0.68kNm \textit{ Answer}$$

Substituting the value of T_A in Equation *(i)*,

$$0.68 - T_D = -1.0$$

$$\text{or, } T_D = 1.68kNm \textit{ Answer}$$

Variation of the torque with the length is shown as follows.

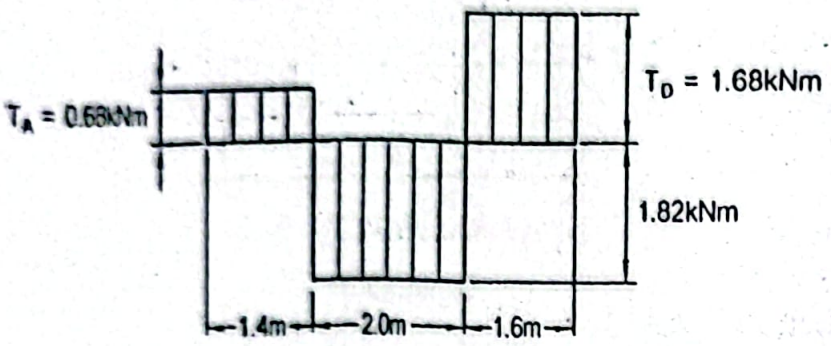

Bending moment diagram

Typical position of the fiber at the top surface of the shaft after deformation is shov below.

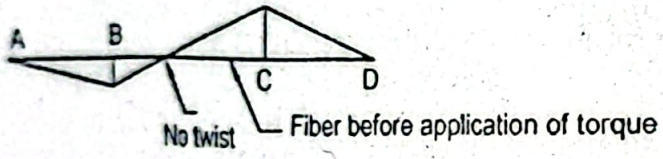

Different segments of the shaft after twist are shown as follows.

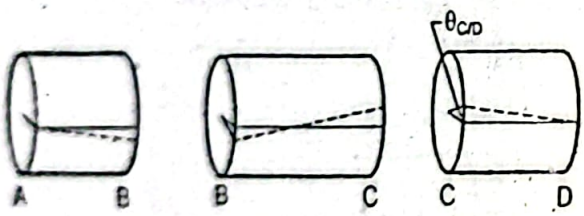

Problem P2.30:

A flanged coupling consists of *12* numbers of bolts each of diameter *20mm*, are located on the pitch circle diameter of *350mm* with equal interspacing. If the allowable shearing stress in the bolt $\tau_a = 35MPa$, determine the torque capacity of the coupling.

Given Data:

Diameter of bolt, $d_b = 20mm$

Pitch circle diameter, $d_p = 350mm$

Number of bolts, $N = 12$

Allowable shearing stress in bolt, $\tau_a = 35MPa$

To Find:

. Load capacity of coupling, T

Solution:

Flanged coupling with 12 numbers of bolts is shown in the figure below.

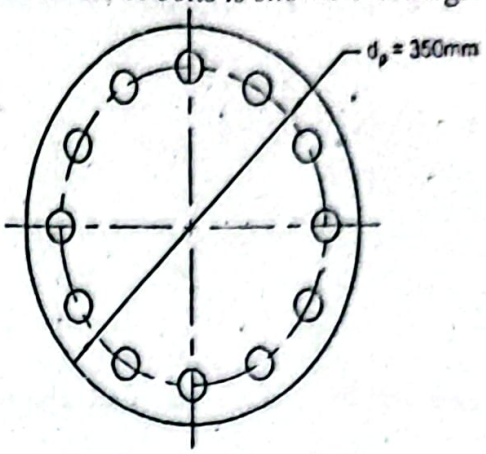

f each bolt resists a shear force P, then the shearing stress,

$$\tau = \frac{4P}{\pi d_b^2}$$

$$\text{or, } \tau_a = 35 = \frac{4P}{\pi \times 20^2}$$

$$\text{or, } P = 11kN$$

herefore, the torque capacity of the coupling,

$$T = NP \times \frac{d_P}{2}$$

$$= 12 \times 11 \times \frac{350}{2} Nm = 23100Nm = 23.1kNm \textbf{ Answer}$$

roblem P2.31:

flanged coupling consists of *12* numbers of bolts each of *12mm* diameter located on a itch circle of *450mm* diameter with equal interspacing and *8* numbers of bolts, each of *2mm* diameter located on a pitch circle of *350mm* diameter with equal interspacing as own in Figure P2.31. If the limiting shearing stress is not to exceed *50MPa*, determine e torque capacity of the coupling.

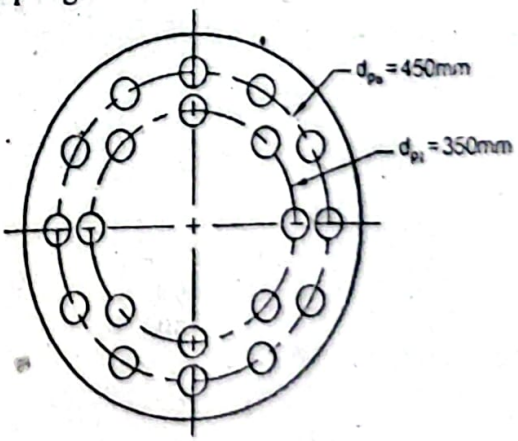

Figure P2.31

Given Data:

Outer pitch circle diameter, $d_{Po} = 450mm$

Inner pitch circle diameter, $d_{Pi} = 350mm$

Diameter of bolt on outer pitch circle, $d_{bo} = 12mm$

Diameter of bolt on inner pitch circle, $d_{bi} = 12mm$

Number of bolts on outer pitch circle, $N_o = 12$

Number of bolts on inner pitch circle, $N_i = 8$

Allowable shearing stress, $\tau_a = 50MPa$

To Find:

- Load capacity of coupling, T

Solution:

Loads on the bolts in the outer and inner pitch circles are shown in the figure below.

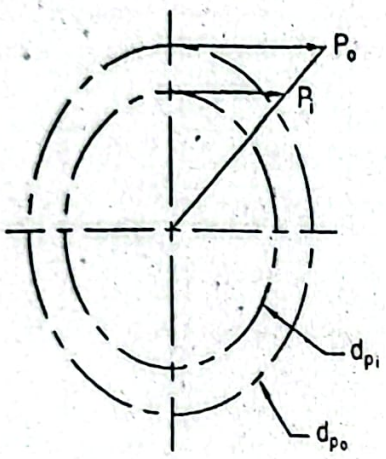

Let the load on each bolt on the outer pitch circle = P_o and that on the inner pitch ci = P_i. Then we find a relation between them as,

$$\frac{P_o}{P_i} = \frac{d_{Po}/2}{d_{Pi}/2} = \frac{450/2}{350/2}$$

$$\text{or, } P_o = 1.2857 P_i$$

For the same bolt diameter, the shearing stress in the bolt on the outer pitch circle will higher than that on the inner pitch circle. Therefore, when the maximum shearing str reaches its limiting value in the bolt on the outer pitch circle,

$$\tau_a = \frac{4P_o}{\pi d_{bo}^2}$$

$$\text{or, } 50 = \frac{4P_o}{\pi \times 12^2}$$

$$\text{or, } P_o = 5654.87N$$

Substituting in Equation(i), the load on the inner bolt,

$$P_i = \frac{P_o}{1.2857} = \frac{5654.87}{1.2857} = 4398.28N$$

Therefore, the required torque capacity of the coupling,

$$T = N_o P_o \frac{d_{Po}}{2} + N_i P_i \frac{d_{Pi}}{2}$$

$$= 12 \times 5654.87 \times \frac{450}{2} + 8 \times 4398.28 \times \frac{350}{2}$$

$$= 21.43 \times 10^6 \ Nmm$$

$$= 21.43 kNm \ Answer$$

Problem P2.32:

Two shafts are connected by a coupling between them. The coupling consists of *12* bolts which are located on a pitch circle diameter of *300mm* at equal interspace. One of the shafts is hollow and the other one is solid. The diameter of the solid shaft is *60mm* and the inside diameter of the hollow shaft is *0.85* times its outside diameter. The maximum shearing stress in the shafts is limited to *50MPa* and that in the bolts is limited to *20MPa*. Determine the outside diameter of the hollow shaft and the diameter of the bolt based on the consideration that both the shafts in coupling are equally strong.

Given Data:

Pitch diameter in coupling, $d_P = 300mm$

Diameter of solid shaft, $d_s = 60mm$

Inside diameter of hollow shaft, $d_i = 0.85 d_o$

Number of bolts in coupling $= 12$

Limiting shearing stress in shaft, $\tau_{s_a} = 50MPa$

Limiting shearing stress in bolt, $\tau_{b_a} = 20MPa$

To Find:

Outside diameter of hollow shaft, d_o

Diameter of bolt, d_b

Solution:

Polar moment of inertia of the solid shaft,

$$J_s = \frac{\pi d_s^4}{32} = \frac{\pi \times 60^4}{32} = 12.72 \times 10^5 \ mm^4$$

Polar moment of inertia of the hollow shaft,

$$J_h = \frac{\pi}{32}\left[d_o^4 - d_i^4\right] = \frac{\pi}{32}\left[d_o^4 - (0.85 d_o)^4\right] = 0.0469 d_o^4 \ mm^4$$

According to the problem the maximum stress on both the shafts will be equal. As a result we find,

$$\tau_s = \tau_h$$

$$\text{or, } \left(\frac{Tc}{J}\right)_s = \left(\frac{Tc}{J}\right)_h$$

Since T will be same for both the shafts, therefore,

$$\left(\frac{c}{J}\right)_s = \left(\frac{c}{J}\right)_w$$

$$\text{or, } \frac{60/2}{12.72\times105} = \frac{}{0.0469d_a^4}$$

$$\text{or, } d_a = 76.75mm \text{ Answer}$$

When the maximum shearing stress reaches its limiting value in the solid shaft,

$$\tau_{s_a} = \left(\frac{Tc}{J}\right)_s$$

$$\text{or, } 50 = \frac{T\times60/2}{12.72\times10^5}$$

$$\text{or, } T = 2.12\times10^6\ Nmm$$

The bolts in the coupling will resist the same torque. Then a single bolt will torque,

$$T_b = \frac{T}{N} = \frac{2.12\times10^6}{12} Nmm = 17.67\times10^4\ Nmm$$

Therefore, the shear force develops in a single bolt,

$$F_b = \frac{T_b}{(d_p/2)} = \frac{17.67\times10^4}{300/2} N = 1178N$$

Direct shear on each bolt, $\tau_b = \dfrac{F_b}{\frac{\pi d_b^2}{4}}$

$$\text{or, } \tau_{b_a} = \frac{F_b\times4}{\pi d_b^2}$$

$$\text{or, } 20 = \frac{1178\times4}{\pi d_b^2}$$

$$\text{or, } d_b = 8.66mm \text{ Answer}$$

Problem P2.33:

A plate is fastened with a vertical member using four inline rivets of equal diamet shown in Figure P2.33. The plate is subjected to an eccentric load of $60kN$ wit eccentricity of $400mm$. Determine the diameter of the rivet if the allowable she stress is $80MPa$.

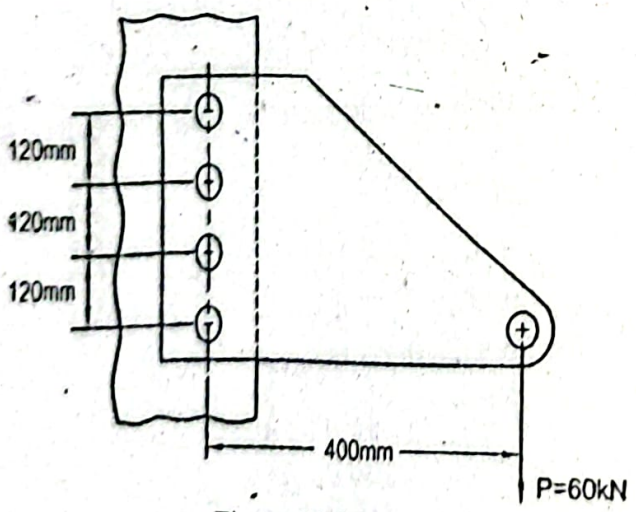

Figure P2.33

Given Data:

Eccentric load, $P = 60kN$

Allowable shearing stress, $\tau_a = 80MPa$

To Find:

- Rivet diameter, d

Solution:

Forces acting on each rivet are shown in the following figure.

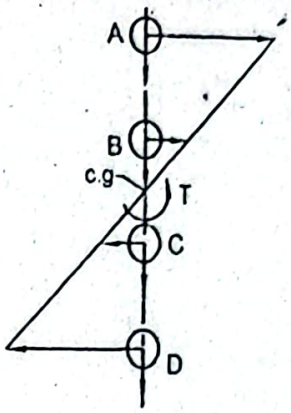

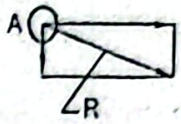

Resultant force on the farthest rivet

Applied torque, $T = P \times e = 60 \times 400Nm = 24 \times 10^3\ Nm$

Average direct shear stress in each bolt,

$$\tau_d = \frac{P}{\sum A_i} = \frac{60 \times 10^3}{4 \times \left(\frac{\pi}{4} d^2\right)} = \frac{19.10 \times 10^3}{d^2} MPa$$

Torsional shearing stress in the farthest bolt,

$$(\tau_t)_D = (\tau_t)_A = \frac{T \rho_A}{A \sum \rho_i^2}$$

$$= \frac{24 \times 10^3 \times 10^3 \times (120+60)}{\frac{\pi d^2}{4} \times (180^2 + 60^2) \times 2}$$

$$= \frac{76.39 \times 10^3}{d^2} MPa$$

Therefore, the resultant shearing stress in the farthest bolt,

$$\tau = \sqrt{\tau_d^2 + \tau_t^2} = \sqrt{\left(\frac{19.10 \times 10^3}{d^2}\right)^2 + \left(\frac{76.39 \times 10^3}{d^2}\right)^2}$$

$$\text{or, } \tau_a = 80 = \frac{78.74 \times 10^3}{d^2}$$

$$\text{or, } d = 31.37mm \text{ Answer}$$

Problem P2.34:

A plate is fastened with a member by four rivets of equal diameter as shown in Figure P2.34. The plate supports a load $P = 50kN$. If allowable shearing stress is $80MPa$, determine the rivet size.

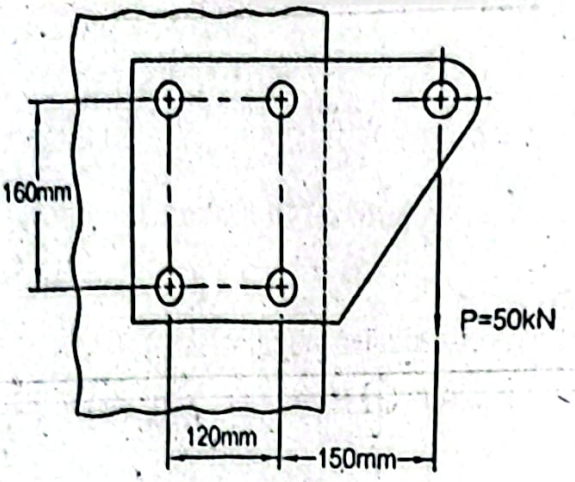

Figure P2.34

Given Data:

Load, $P = 50kN$

Allowable shearing stress, $\tau_a = 80MPa$

To Find:

Size of rivet, d

Solution:

Forces acting on each rivet are shown in the following figure.

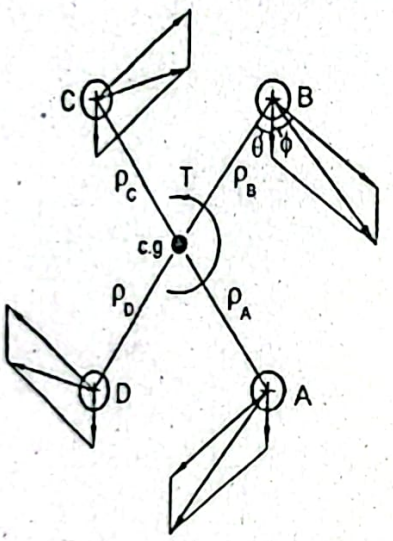

Applied torque, $T = (50 \times 10^3) \times (150 + 120/2) = 10.5 \times 10^6\ Nmm = 10.5kNm$

Average direct shear stress in each rivet,

$$\tau_d = \frac{P}{4A} = \frac{4 \times 50 \times 10^3}{4 \times \pi d^2} = \frac{15.92 \times 10^3}{d^2} MPa$$

Distance, $\rho_A = \rho_B = \rho_C = \rho_D = \sqrt{60^2 + 80^2} = 100mm$

Therefore, $\sum \rho_i^2 = 4 \times 100^2 = 40 \times 10^3\ mm^2$

Torsional shearing stress in each bolt,

$$\tau_t = \frac{T\rho_i}{A\sum \rho_i^2} = \frac{10.5 \times 10^6 \times 100}{\frac{\pi d^2}{4} \times 40 \times 10^3} = \frac{33.42 \times 10^3}{d^2} MPa$$

Resultant shearing stress is maximum at the rivets A and B as shown in the above figure

Angle, $\theta = \tan^{-1}(60/80) = 36.87^0$

Therefore, angle, $\phi = 90^0 - 36.87^0 = 53.13^0$

Resultant shearing stress in the rivets A and B,

$$\tau_A = \tau_B = \sqrt{\tau_t^2 + \tau_d^2 + 2\tau_t\tau_d \cos\phi}$$

or, $$\tau_a = \sqrt{\left(\frac{33.42\times10^3}{d^2}\right)^2 + \left(\frac{15.92\times10^3}{d^2}\right)^2 + 2\left(\frac{33.42\times10^3}{d^2}\right)\times\left(\frac{15.92\times10^3}{d^2}\right)\cos 53.13^0}$$

or, $$80 = \frac{44.82\times10^3}{d^2}$$

or, $d = 23.67mm$ **Answer**

Problem P2.35;

A plate is fastened with a member using three rivets of equal diameter of $12mm$ as shown in Figure P2.35. If the plate supports an eccentric load of $4kN$, determine the maximum shearing stress developed in the rivet.

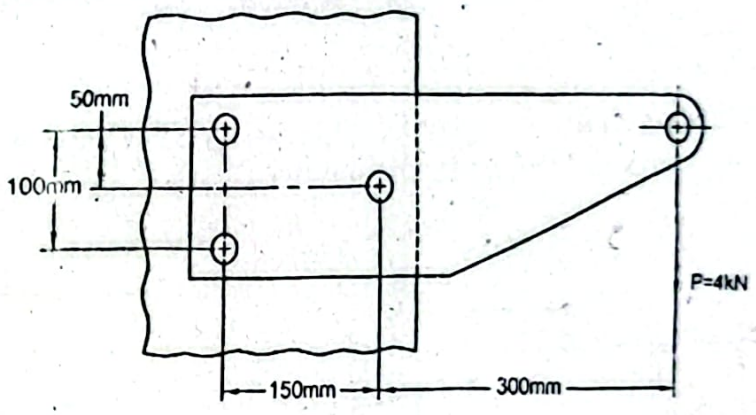

Figure P2.35

Given Data:

Eccentric load, $P = 4kN$

Diameter of rivet, $d = 12mm$

To Find:

Maximum shearing stress, τ_{max}

Solution:

Forces acting on each rivet are shown in the following figure.

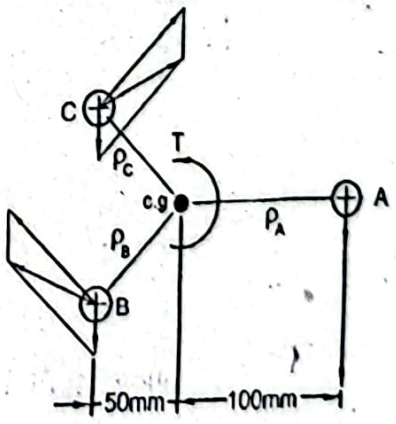

Torque, $T = (4\times10^{\ldots})\times(\ldots$ ... $= 1.6kNm$

Average direct shearing stress in each rivet,

$$\tau_d = \frac{P}{3A} = \frac{4\times10^3\times4}{3\times\pi\times12^2} = 11.79MPa$$

Distance, $\rho_A = 100mm,\ \rho_B = \rho_C = \sqrt{50^2+50^2} = 70.71mm$

Therefore, $\sum\rho_i^2 = 100^2 + 2\times70.71^2 = 20\times10^3\,mm^2$

Torsional shearing stress in the rivets B and C are equal,

$$(\tau_t)_B = (\tau_t)_C = \frac{T\rho_B}{A\sum\rho_i^2} = \frac{1.6\times10^6\times70.71\times4}{\pi\times12^2\times20\times10^3}MPa$$

$$= 50.02MPa$$

Torsional shearing stress in the rivet A,

$$(\tau_t)_A = \frac{T\rho_A}{A\Sigma\rho_i^2} = \frac{1.6\times10^6\times100\times4}{\pi\times12^2\times20\times10^3} = 70.74MPa$$

Maximum shearing stress occurs in the rivet A.

Resultant shearing stress in the rivet A,

$$\tau_A = \tau_{max} = (\tau_t)_A + \tau_d = 70.74 + 11.79 = 82.53MPa \text{ Answ.}$$

Problem P2.36:

A riveted connection as shown in Figure P2.36 is designed to support a load of 10 Allowable shearing stress is $75MPa$. Determine the rivet diameter if all of them ar equal size.

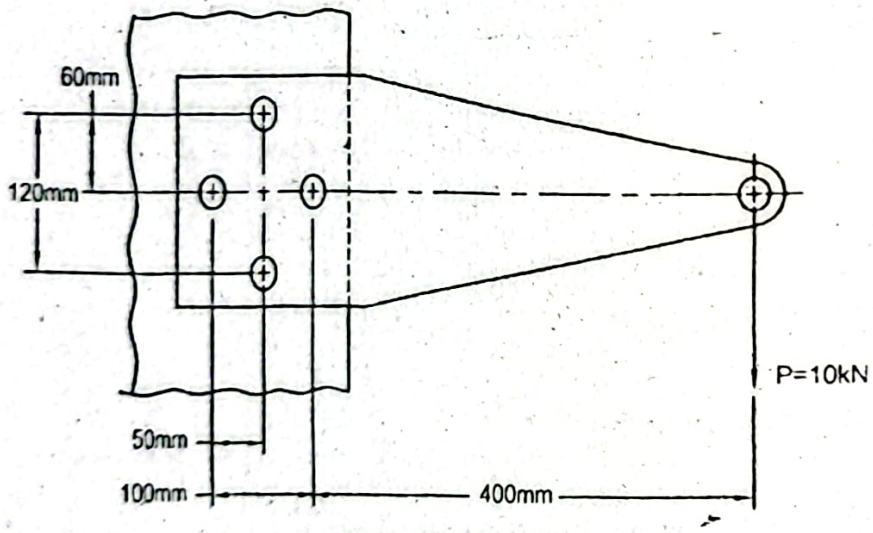

Figure P2.36

Given Data:

Load, $P = 10kN$

Allowable shearing stress, $\tau_a = 75MPa$

To Find:

- Size of rivet, d

Solution:

Forces acting on each rivet are shown in the following figure.

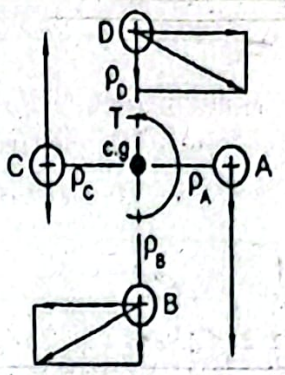

Average direct shearing stress in each rivet,

$$\tau_d = \frac{P}{4A} = \frac{10\times10^3\times4}{4\times\pi d^2} = \frac{3.18\times10^3}{d^2} MPa$$

Torque, $T = (10\times10^3)\times(400+50) = 4.5\times10^6\ Nmm = 4.5kNm$

Distance, $\rho_A = \rho_C = 50mm$

Distance, $\rho_B = \rho_D = 60mm$

Therefore, $\sum\rho_i^2 = 2\times50^2 + 2\times60^2 = 12.2\times10^3\ mm^2$

Torsional shearing stress in the rivets A and C are equal,

$$(\tau_t)_A = (\tau_t)_C = \frac{T\rho_A}{A\sum\rho_i^2} = \frac{4.5\times10^6\times50\times4}{\pi\times d^2\times12.2\times10^3}$$

$$= \frac{23.48\times10^3}{d^2} MPa$$

Torsional shearing stress in the rivet B and D are equal,

$$(\tau_t)_B = (\tau_t)_D = \frac{T\rho_B}{A\Sigma\rho_i^2} = \frac{4.5\times10^6\times60\times4}{\pi d^2\times12.2\times10^3}$$

$$= \frac{28.18\times10^3}{d^2} MPa$$

Between the rivets A and C, the rivet A yields the higher shearing stress. Resultant shearing stress in the rivet A,

$$\tau_A = \tau_d + (\tau_t)_A$$

or, $\tau_a = 75 = \frac{3.18\times10^3}{d^2} + \frac{23.48\times10^3}{d^2}$

or, $d = 18.85mm$

Resultant shearing stress in the rivets B and D are equal,

$$\tau_B = \tau_D = \sqrt{\tau_d^2 + (\tau_t)_B^2} = \sqrt{\left(\frac{3.18\times10^3}{d^2}\right)^2 + \left(\frac{28.18\times10^3}{d^2}\right)^2}$$

or, $\tau_a = 75 = \frac{28.36\times10^3}{d^2}$

or, $d = 19.45mm$

Therefore, the required rivet size will be the higher of the two values, that is,

$d = 19.45mm$ *Answer*

Problem P2.37:

A riveted connection is shown in Figure P2.37. Rivets B and C are of equal size and of them has diameter of $25mm$ while the rivet A has diameter of $36mm$. Determine maximum shearing stress in the rivets if the connection supports an eccentric $30kN$.

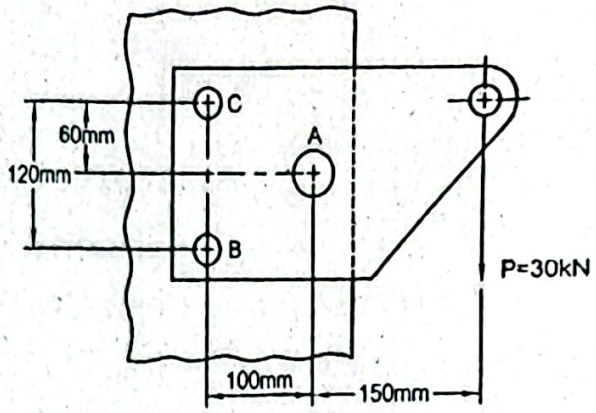

Figure P2.37

Given Data:

Diameter of rivet A, $d_A = 36mm$

Diameter of rivet B, $d_B = 25mm$

Diameter of rivet C, $d_C = 25mm$

Eccentric load, $P = 30kN$

To Find:

- Maximum shearing stress in rivet, τ_{max}

Solution:

Forces acting on each rivet are shown in the following figure.

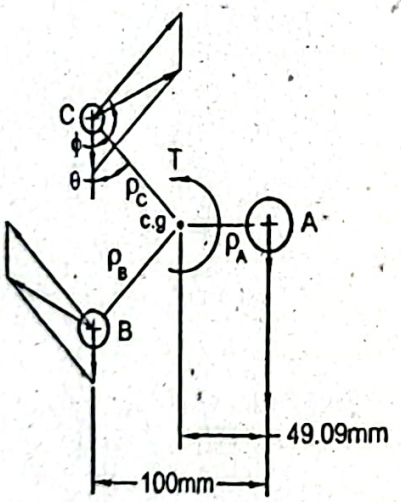

For different diameters of the rivets, the centroid is obtained from,

$$\bar{x} = \frac{\sum A_i x_i}{\sum A_i}$$

Cross-sectional area of the rivets B and C are equal,

$$A_B = A_C = \frac{\pi \times 25^2}{4} = 490.87mm^2$$

Cross-sectional area of the rivet A,

$$A_A = \frac{\pi \times 36^2}{4} = 1017.88 mm^2$$

Therefore, $\sum A_i = A_A + A_B + A_C = 1017.88 + 2 \times 490.87 = 2 \times 10^3 mm^2$

Taking reference with respect to the center of the rivet A,

$$\sum A_i x_i = A_A \times 0 + A_B \times 100 + A_C \times 100$$
$$= 0 + 490.87 \times 100 + 490.87 \times 100 = 98.17 \times 10^3 mm^3$$

Therefore from Equation (i),

$$\bar{x} = \frac{98.17 \times 10^3}{2 \times 10^3} = 49.09 mm$$

Torque, $T = P \times (150 + 49.09)$

$$= 30 \times 10^3 \times (150 + 49.09) = 5.97 \times 10^6 Nmm = 5.97 kNm$$

Average direct shearing stress,

$$\tau_d = \frac{P}{\sum A_i} = \frac{30 \times 10^3}{2 \times 10^3} = 15 MPa$$

Torsional shearing stress in the rivet A,

$$(\tau_t)_A = \frac{T \rho_A}{\sum A_i \rho_i^2} \qquad (ii)$$

We have, $\sum A_i \rho_i^2 = A_A \rho_A^2 + A_B \rho_B^2 + A_C \rho_C^2$

But, $\rho_A = 49.09 mm, \ \rho_B = \rho_C = \sqrt{60^2 + 50.91^2} = 78.69 mm$

Therefore, $\sum A_i \rho_i^2 = 1017.88 \times 49.09^2 + 2 \times 490.87 \times 78.69^2$

$$= 8.53 \times 10^6 mm^3$$

Substituting in Equation (ii),

$$(\tau_t)_A = \frac{5.97 \times 10^6 \times 49.09}{8.53 \times 10^6} = 34.36 MPa$$

Torsional shearing stress in the rivets B and C are equal,

$$(\tau_t)_B = (\tau_t)_C = \frac{T \rho_B}{\sum A_i \rho_i^2} = \frac{5.97 \times 10^6 \times 78.69}{8.53 \times 10^6} = 55.07 MPa$$

Angle, $\theta = \tan^{-1}\left(\frac{50.91}{60}\right) = 40.31^0$

Therefore, $\phi = 90^0 + 40.31^0 = 130.31^0$

Resultant shearing stress in the rivet B,

$$\tau_B = \sqrt{\tau_d^2 + (\tau_t)_B^2 + 2\tau_d (\tau_t)_B \cos\phi}$$
$$= \sqrt{15^2 + 55.07^2 + 2 \times 15 \times 55.07 \cos 130.31^0}$$
$$= 46.79 MPa$$

Resultant shearing stress in the rivet C,

$$\tau_C = \tau_B = 46.79 MPa$$

Resultant shearing stress in the rivet A,

$$\tau_A = \tau_d + (\tau_t)_A$$
$$= 15 + 34.36 = 49.36 MPa$$

Therefore, the maximum shearing stress occurs in the rivet A,

$$\tau_{max} = 49.36 MPa \text{ Answer}$$

Problem P2.38:

A circular steel tube of outside diameter of $20mm$ and wall thickness of subjected to a torque of $80Nm$. Find the maximum shearing stress using torsio and average shearing stress considering thin walled cylinder and compare the re

Given Data:

Outside diameter, $d_o = 20mm$

Wall thickness, $t = 3mm$

Applied torque, $T = 80Nm$

To Find:

- Maximum shearing stress, τ_{max}
- Average shearing stress, τ

Solution:

Cross-section of the circular tube is shown in the figure below.

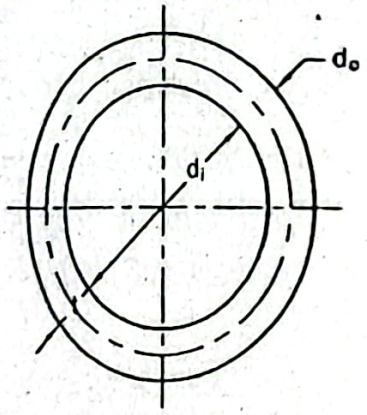

We have for the maximum shearing stress,

$$\tau_{max} = \frac{Tc}{J}$$

Inside diameter, $d_i = (d_o - 2t) = (20 - 2\times 3)mm = 14mm$

Polar moment of inertia, $J = \frac{\pi}{32}(d_o^4 - d_i^4)$

$$= \frac{\pi}{32}(20^4 - 14^4) = 11.94\times 10^3 mm^4$$

Substituting this value in Equation (i),

$$\tau_{max} = \frac{80\times 10^3 \times 20/2}{11.94\times 10^3} = 67MPa \text{ Answer}$$

For a thin-walled cylinder average shearing stress,

$$\tau = \frac{T}{2At}$$

rea enclosed by the center line of the tube wall,

$$A = \frac{\pi}{4}\left(\frac{20+14}{2}\right)^2 = 226.98mm^2$$

ubstituting in Equation *(ii)*, $\tau = \frac{80\times10^3}{2\times226.98\times3} = 58.74MPa$ **Answer**

herefore, the shearing stress decreases based on the thin walled cylinder and per cent eduction in the shearing stress,

$$= \frac{67-58.74}{67}\times100 = 12.33$$ **Answer**

roblem P2.39:

n elliptical tube of thickness $2.5mm$ is loaded by a torque of $2.5kNm$. Determine the verage shearing stress developed in the tube wall as shown in Figure P2.39.

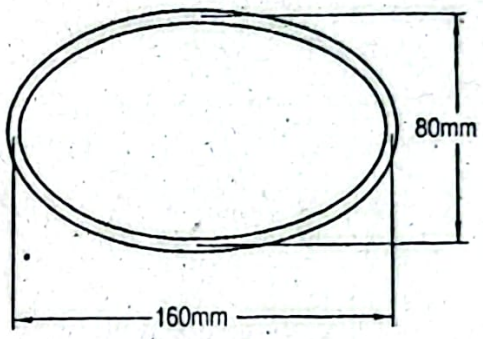

Figure P2.39

iven Data:

/all thickness, $t = 2.5mm$

pplied torque, $T = 2.5kNm$

o Find:

Average shearing stress, τ

olution:

rea enclosed by the center line of the tube wall,

$$A = \frac{\pi ab}{4} = \frac{\pi\times160\times80}{4} = 10.053\times10^3 mm^2$$

herefore, the average shearing stress, $\tau = \frac{T}{2At}$

$$= \frac{2.5\times10^6}{2\times10.053\times10^3\times2.5}$$

$$= 49.74MPa$$ **Answer**

roblem P2.40:

- tube of $80mm\times80mm$ square section with wall thickness of $3mm$ is fabricated by xtrusion process. If a torque of $2kNm$ is applied, find the average shearing stress. Now due to the defective production wall thickness becomes nonuniform with $2mm$ in the wo adjacent walls and $4mm$ in another two walls, determine the average shearing tresses for both $2mm$ and $4mm$ walls of the tube.

Given Data:

Wall thickness, $t = 3mm$

Cross-section $= 80mm \times 80mm$

Applied torque, $T = 2kNm$

To Find:

- Average shearing stress, τ for uniform wall
- Average shearing stress, τ for $2mm$ and $4mm$ nonuniform walls

Solution:

Cross-section of the tube is shown in the figure below.

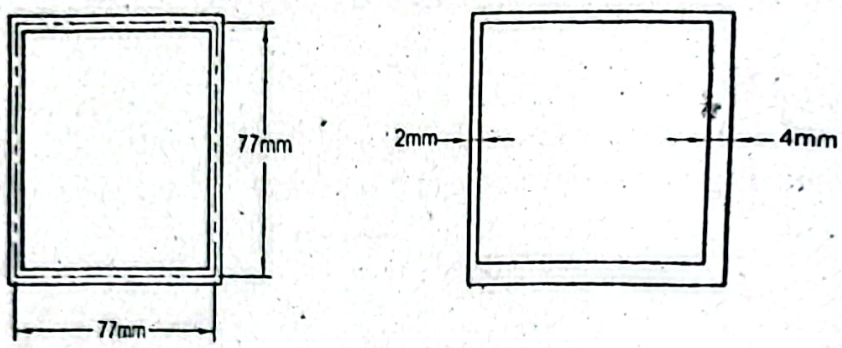

(a) Uniform wall thickness (b) Non-uniform wall thickness

Disregarding stress concentration at the tube corners, the average shearing stress,

$$\tau = \frac{T}{2At}$$

Area A enclosed by the center line of the tube wall,

$$A = 77 \times 77 mm^2 = 5929 mm^2$$

Substituting in Equation (i) the average shearing stress for the uniform wall,

$$\tau = \frac{2 \times 10^6}{2 \times 5929 \times 3} MPa = 56.22 MPa \quad \textbf{Answer}$$

Now average shearing stress for the non-uniform wall of $2mm$ thickness,

$$\tau = \frac{2 \times 10^6}{2 \times 5929 \times 2} MPa = 84.33 MPa \quad \textbf{Answer}$$

and of $4mm$ thickness, $$\tau = \frac{2 \times 10^6}{2 \times 5929 \times 4} MPa = 42.17 MPa \quad \textbf{Answer}$$

Problem P2.41:

A tube whose cross-section is shown in Figure P2.41 has wall thickness of $3mm$. If shearing stress is not to exceed $40MPa$, determine the maximum torque that can transmitted.

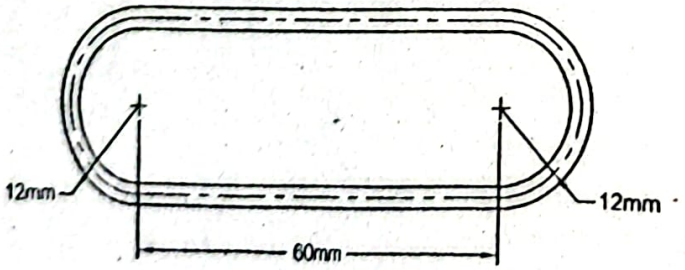

Figure P2.41

Given Data:

Allowable shearing stress $\tau_a = 40MPa$

Wall thickness of tube, $t = 3mm$

To Find:

- Maximum torque transmitted, T

Solution:

Area enclosed by the center line of the tube wall,

$$A = \pi r^2 + 60 \times 2r$$
$$= \pi \times 12^2 + 60 \times 2 \times 12$$
$$= 1892.39mm^2$$

Therefore, the average shearing stress,

$$\tau = \frac{T}{2At}$$

$$\text{or, } \tau_a = 40 = \frac{T}{2 \times 1892.39 \times 3}$$

$$\text{or, } T = 454.18 \times 10^3 Nmm$$

That is, the required maximum torque transmitted,

$$T = 454.18Nm \text{ Answer}$$

Problem P2.42:

A $0.8m$ long steel member of rectangular cross-section $(30mm \times 300mm)$ is subjected to a twisting moment. If the maximum shearing stress is limited to $50MPa$ and the angle of twist is limited to 1^0, determine the maximum torque that can be applied. Consider modulus of rigidity for steel $G = 80GPa$.

Given Data:

Length of member, $L = 0.8m$

Long side of rectangle, $b = 300mm$

Short side of rectangle, $c = 30mm$

Limiting shearing stress, $\tau_a = 50MPa$

Limiting angle of twist, $\phi_a = 1^0$

Modulus of rigidity, $G = 80GPa$

To Find:

Maximum torque, T

Solution:

We have for the maximum shearing stress,

$$\tau_{max} = \frac{T}{\alpha bc^2} \qquad (i)$$

$$\text{Ratio} = \frac{b}{c} = \frac{300}{30} = 10$$

Corresponding to this ratio of 10, coefficients $\alpha = 0.312$ and $\beta = 0.312$.

Substituting these values in Equation (i) and writing $\tau_{max} = \tau_a$,

$$\tau_a = 50 = \frac{T}{0.312 \times 300 \times 30^2}$$

or, $T = 4.21 \times 10^6\ Nmm = 4.21kNm$

We have for the angle of twist, $\phi = \frac{TL}{\beta bc^3 G}$

Substituting the values in Equation *(ii)* and writing $\phi = \phi_a$,

$$\phi_a = \frac{1 \times \pi}{180} = \frac{T \times 0.8 \times 10^3}{0.312 \times 300 \times 30^3 \times 80 \times 10^3}$$

or, $T = 4.41 \times 10^6\ Nmm = 4.41kNm$

Therefore, the required maximum torque that can be applied,

$T = 4.21kNm$ *Answer*

Problem P2.43:

A valve stem with a diameter of *50mm* is machined down at its end to provide sq section as shown in Figure P2.43. Disregarding the local stresses due to change in section, find the maximum torque that can be applied if the maximum shearing stres limited to *50MPa*. Also find the ratio of the maximum stresses in the square and circ sections.

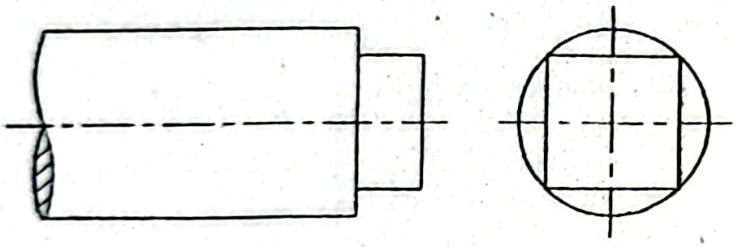

Figure P2.43

Given Data:

Diameter, $d = 50mm$

Allowable shearing stress, $\tau_a = 50MPa$

To Find:

- Maximum torque, T
- Ratio of maximum stresses in square and circular sections, R

Solution:

We have for the maximum shearing stress in the square section,

$$\tau_{max} = \frac{T}{\alpha bc^2} \qquad (i)$$

Writing $b = c$ for the square section, $\tau_{max} = \frac{T}{\alpha b^3}$

Side of the square section b is obtained from,

$$b^2 + b^2 = d^2$$

or, $2b^2 = 50^2$

or, $b = 35.36mm$

For the square section, $\frac{b}{c} = \frac{35.36}{35.36} = 1.0$

Corresponding to this value of b/c coefficient $\alpha = 0.208$, therefore, from Equation (i),

$$\tau_{max} = \tau_a = 50 = \frac{T}{0.208 \times 35.36^3}$$

or, $T = 459.80 \times 10^3\ Nmm = 459.80 Nm$ **Answer**

Shearing stress developed in the circular section,

$$\tau = \frac{16T}{\pi d^3} = \frac{16 \times 459.80 \times 10^3}{\pi \times 50^3} MPa = 18.73 MPa$$

Therefore, the required ratio, $R = \frac{50}{18.73} = 2.67$ **Answer**

Problem P2.44:

One shaft of circular cross-section and another one of square cross-section are subjected to the same torque. If the cross-sectional area of each of the shafts is same, determine the ratio of the maximum shearing stresses of the square and circular shafts.

Given Data:

Torque of square shaft, $T_{sq} = T_{cir}$

Cross-sectional area of square shaft, $A_{sq} = A_{cir}$

To Find:

Ratio of maximum stresses of square and circular shafts, R

Solution:

We have the maximum shearing stress for the rectangular shaft,

$$\tau = \frac{T}{\alpha b c^2}$$

But for the square section $b = c$, therefore,

$$\tau_{sq} = \frac{T_{sq}}{\alpha b^3}$$

For the ratio of $b/c = 1.0$ we have coefficient $\alpha = 0.208$, therefore,

$$\tau_{sq} = \frac{T_{sq}}{0.208 b^3} \qquad (i)$$

We have the maximum shearing stress for the circular shaft,

$$\tau_{cir} = \frac{16 T_{cir}}{\pi d^3} \qquad (ii)$$

According to the problem, $A_{sq} = A_{cir}$

$$\text{or, } b^2 = \frac{\pi}{4} \times d^2$$

$$\text{or, } b = \sqrt{\frac{\pi}{4}}\, d \qquad (iii)$$

Ratio, $$R = \frac{\tau_{sq}}{\tau_{cir}}$$

Substituting the values from Equations (i) and (ii),

$$R = \frac{T_{sq} \times \pi d^3}{0.208 b^3 \times 16 T_{cir}}$$

Now writing $T_{sq} = T_{cir}$ and substituting the value of b from Equation (iii) the req ratio,

$$R = \frac{\pi d^3}{0.208 \times \left(\frac{\pi}{4}\right)^{3/2} d^3 \times 16} = 1.36 \quad \textbf{Answer}$$

Problem P2.45:

A $0.8m$ long steel bar of rectangular cross-section $(20mm \times 30mm)$ is subjected torque for which an angle of twist of 1.5^0 is developed. Determine the maxi shearing stress if the modulus of rigidity $G = 80GPa$.

Given Data:

Length of bar, $L = 0.8m$

Long side, $b = 30mm$

Short side, $c = 20mm$

Angle of twist, $\phi = 1.5^0$

Modulus of rigidity, $G = 80GPa$

To Find:

- Maximum shearing stress, τ_{max}

Solution:

We have for the angle of twist, $\phi = \frac{TL}{\beta b c^3 G}$

For the ratio $\frac{b}{c} = \frac{30}{20} = 1.5$, coefficient $\beta = 0.196$, therefore, from Equation (i),

$$\frac{1.5 \times \pi}{180} = \frac{T \times 0.8 \times 10^3}{0.196 \times 30 \times 20^3 \times 80 \times 10^3}$$

or, $T = 123.15Nm$

We have for the maximum shearing stress,

$$\tau = \frac{T}{\alpha b c^2}$$

For the ratio $\frac{b}{c} = 1.5$, coefficient $\alpha = 0.231$, therefore, from Equation (ii),

$$\tau_{max} = \frac{123.15 \times 10^3}{0.231 \times 30 \times 20^2}$$

$\sigma_{max} = 44.45MPa$ *Answer*

roblem P2.46:

1.0m long steel plate with breadth of *120mm* and thickness of *5mm* is subjected to an ial tensile load *P* that is applied in the longitudinal direction of the plate. The plate has circular hole of *4mm* at the center of the plate. Determine the axial load that can be plied if the maximum tensile stress is limited to *180MPa* . Assume the plate as infinite.

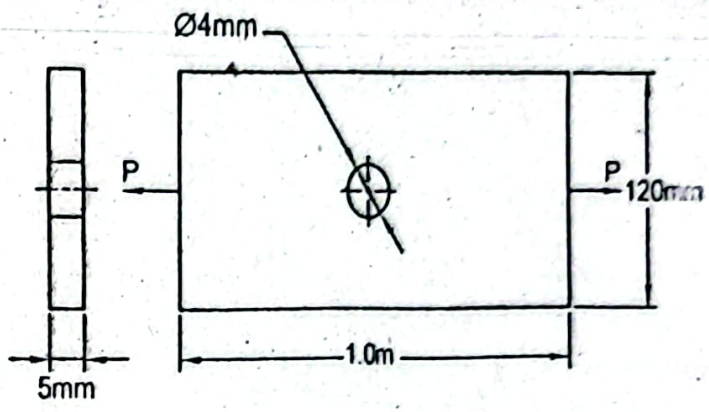

Figure P2.46

iven Data:

ength of plate, $L = 1.0m$

readth of plate, $b = 120mm$

hickness of plate, $t = 5mm$

iameter of circular hole, $d = 4mm$

imiting tensile stress, $\sigma_a = 180MPa$

o Find:

Maximum axial load applied, P

olution:

ssuming the plate as infinite, the maximum tensile stress with a circular hole,

$$\sigma_{max} = 3\sigma_{av}$$

$$\text{or, } \sigma_{av} = \frac{\sigma_{max}}{3} = \frac{\sigma_a}{3} = \frac{180}{3} MPa = 60MPa$$

verage tensile stress, $$\sigma_{av} = \frac{P}{A} = \frac{P}{b \times t}$$

$$\text{or, } 60 = \frac{P}{120 \times 5}$$

$$\text{or, } P = 36 \times 10^3 N$$

herefore, the required maximum axial load that can be applied,

$$P = 36kN \text{ Answer}$$

roblem P2.47:

helical compression spring is deflected by *10mm* when an axial load is applied. etermine the shearing stress developed in the spring if the wire diameter is *5mm*, spring dex is *10* and the spring rate is *20kN / m*. Use Wahl factor for stress concentration ffect.

Given Data:
Deflection, $\delta = 10mm$
Wire diameter, $d = 5mm$
Spring index, $C = 10$
Spring rate, $k = 20kN/m$

To Find:
- Stress developed, τ

Solution:
Axial load, $F = k\delta = 20 \times 10N = 200N$

Wahl factor, $K_W = \frac{4C-1}{4C-4} + \frac{0.615}{C}$

$= \frac{4\times10-1}{4\times10-4} + \frac{0.615}{10} = 1.145$

Shearing stress, $\tau = K_W \frac{8FD}{\pi d_3} = K_W \frac{8FC}{\pi d^2}$

$= 1.145 \times \frac{8\times200\times10}{\pi(5)^2}$

$= 233.26MPa$ *Answer*

Problem P2.48:
A helical compression spring of mean diameter of $180mm$ and wire diameter of is subjected to an axial load of $0.8kN$. If the number of coils is 20, determi maximum shearing stress developed and the deflection of the spring. Consider m of rigidity $G = 80GPa$. Use Wahl factor for stress concentration effect.

Given Data:
Mean diameter, $D = 180mm$
Wire diameter, $d = 16mm$
Number of turns, $N = 20$
Axial load, $P = 0.8kN$.
Modulus of rigidity, $G = 80GPa$

To Find:
- Maximum shearing stress, τ_{max}
- Deflection of spring, δ

Solution:

We have Wahl factor, $K_W = \frac{4C-1}{4C-4} + \frac{0.615}{C}$

Spring index, $C = \frac{D}{d} = \frac{180}{16} = 11.25$

Substituting this value of C in Equation (i),

$$K_W = \frac{4\times11.25-1}{4\times11.25-4} + \frac{0.615}{11.25} = 1.128$$

We have the maximum shearing stress with Wahl factor,

$$\tau_{max} = K_W \frac{8PD}{\pi d^3}$$

$$= 1.128 \times \frac{8 \times 0.8 \times 10^3 \times 180}{\pi \times 16^3}$$

$$= 100.98MPa \text{ Answer}$$

Deflection of spring, $\delta = \frac{8PD^3N}{Gd^4}$

$$= \frac{8 \times 0.8 \times 10^3 \times 180^3 \times 20}{80 \times 10^3 \times 16^4}$$

$$= 142.38mm \text{ Answer}$$

Problem P2.49:

A helical compression steel spring is subjected to an axial load of $1.0kN$. If the spring index is 6, number of turns is 15 and the maximum shearing stress in the spring is not to exceed $120MPa$, find the suitable wire diameter from the available wires of $12mm$ to $18mm$ diameter with a step of $2mm$. Determine the maximum shearing stress for the selected wire. Determine also the deflection and the spring constant. Modulus of rigidity for steel is $80GPa$. Use Wahl factor for stress concentration effect.

Given Data:

Spring index, $C = 6$

Number of turns, $N = 15$

Axial load, $P = 1.0kN$

Limiting shearing stress, $\tau_a = 120MPa$

Modulus of rigidity for steel, $G = 80GPa$

Available wire diameters $= 12mm$ to $18mm$ with a step of $2mm$

To Find:

- Suitable wire diameter, d
- Maximum shearing stress for selected wire, τ_{max}
- Deflection of spring, δ
- Spring constant, k

Solution:

We have Wahl factor, $K_W = \frac{4C-1}{4C-4} + \frac{0.615}{C}$ ...(i)

$$= \frac{4 \times 6 - 1}{4 \times 6 - 4} + \frac{0.615}{6} = 1.2525$$

We have maximum shearing stress with Wahl factor,

$$\tau_{max} = K_W \frac{8PD}{\pi d^3}$$

$$\text{or, } \tau_a = 120 = 1.2525 \times \frac{8 \times 1.0 \times 10^3 \times 6}{\pi \times d^2}$$

$$\text{or, } d = 12.63mm$$

Now from the available wires, the appropriate wire is selected as,

$$d = 14mm \text{ Answer}$$

For this wire, the maximum shearing stress developed,

$$\tau_{max} = K_W \frac{8PD}{\pi d^3}$$

$$= 1.2525 \times \frac{8 \times 1.0 \times 10^3 \times 6}{\pi \times 14^2}$$

$$= 97.64MPa \text{ Answer}$$

Spring index, $C = \frac{D}{d}$

Therefore, mean diameter, $D = C \times d = 6 \times 14mm = 84mm$

Deflection of spring, $\delta = \frac{8PD^3N}{Gd^4}$

$$= \frac{8 \times 1.0 \times 10^3 \times 84^3 \times 15}{80 \times 10^3 \times 14^4} mm = 23.14mm \text{ Answer}$$

Spring constant, $k = \frac{P}{\delta} = \frac{1.0 \times 10^3}{23.14} = 43.22 \frac{kN}{m}$ Answer

Problem P2.50:

Two concentric springs carry an axial load of 750N. The mean diameters of the outer and inner springs are respectively 160mm and 120mm. Coil diameter is 16mm for the outer and inner springs. Number of coils is same for both the outer and inner spr Determine the shearing stresses in the inner and outer springs based on the considera of static load.

Given Data:

Mean diameter of outer spring, $D_o = 160mm$

Mean diameter of inner spring, $D_i = 120mm$

Coil diameter, $d = 16mm$

Total axial load, $P = 750N$

To Find:

- Shearing stress in outer spring, τ_o
- Shearing stress in inner spring, τ_i

Solution:

Let the load on the outer spring be P_o and that on the inner spring be P_i.

Then the total axial load, $P = P_o + P_i$ *(i)*

Deflection of the outer spring,

$$\delta_o = \frac{8P_oD_o^3N}{Gd^4} = \frac{8 \times P_o \times (160)^3 N}{Gd^4}$$

Deflection of the inner spring,

$$\delta_i = \frac{8P_iD_i^3N}{Gd^4} = \frac{8 \times P_i \times (120)^3 N}{Gd^4}$$

springs, therefore,

$$\delta_o = \delta_i$$

$$\text{or, } \frac{8P_o(160)^3 N}{Gd^4} = \frac{8P_i(120)^3 N}{Gd^4}$$

$$\text{or, } \frac{P_o}{P_i} = \frac{120^3}{160^3}$$

$$\text{or, } P_o = 0.422P_i \qquad (ii)$$

Now from Equations (i) and (ii),

$$P = 0.422P_i + P_i$$

$$\text{or, } P_i = \frac{P}{1.422} = \frac{750}{1.422} = 527.43N$$

Therefore, $P_o = 0.422 \times 527.43 = 222.57N$

Therefore, the shearing stress in the outer spring,

$$\tau_o = \frac{P_o}{A}\left(1 + \frac{2D_o}{d}\right) = \frac{222.57 \times 4}{\pi \times 16^2}\left(1 + \frac{2 \times 160}{16}\right) = 23.25MPa \text{ Answer}$$

and the shearing stress in the inner spring,

$$\tau_i = \frac{P_i}{A}\left(1 + \frac{2D_i}{d}\right)$$

$$= \frac{527.43 \times 4}{\pi \times 16^2}\left(1 + \frac{2 \times 120}{16}\right)MPa = 41.97MPa \text{ Answer}$$

Problem P2.51:

A helical compression spring of mean diameter $180mm$ is subjected to an axial load of $1.5kN$. If the number of turns of the spring is 18 and maximum shearing stress is not to exceed $80MPa$, select the appropriate coil diameter from the available wires between 16 to $24mm$ diameter with a step of $2mm$. Consider modulus of rigidity $G = 80MPa$. Use Wahl factor to find coil diameter. Also determine the deflection of the spring.

Given Data:

Mean diameter of spring, $D = 180mm$

Axial load, $P = 1.5kN$

Number of turns of spring, $N = 18$

Limiting shearing stress, $\tau_o = 80MPa$

Modulus of rigidity, $G = 80GPa$

Available wire diameters $= 16mm$ to $24mm$ with a step of $2mm$

To Find:

Appropriate coil diameter, d

Deflection of spring, δ

Solution:

We have for the maximum shearing stress with Wahl factor,

$$\tau_{max} = K_w \frac{8FD}{\pi d^3}$$

Let us assume Wahl factor $K_w = 1.0$ as a first step. Then,

$$\tau_{max} = \tau_a = \frac{8FD}{\pi d^3}$$

$$\text{or, } 80 = \frac{8 \times 1.5 \times 10^3 \times 180}{\pi d^3}$$

$$\text{or, } d = 20.48mm$$

Spring index, $C = \frac{D}{d} = \frac{180}{20.48} = 8.79 = 8.5$

Wahl factor, $K_w = \frac{4C-1}{4C-4} + \frac{0.615}{C}$

$$= \frac{4 \times 8.5 - 1}{4 \times 8.5 - 4} + \frac{0.615}{8.5} = 1.172$$

Substituting in Equation *(ii)*, $80 = 1.172 \times \frac{8 \times 1.5 \times 10^3 \times 180}{\pi d^3}$

$$\text{or, } d = 21.60mm$$

Spring index, $C = \frac{D}{d} = \frac{180}{21.60} = 8.33$

Wahl factor, $K_w = \frac{4 \times 8.33 - 1}{4 \times 8.33 - 4} + \frac{0.615}{8.33} = 1.176$

Substituting in Equation *(ii)*, $80 = 1.176 \times \frac{8 \times 1.5 \times 10^3 \times 180}{\pi d^3}$

$$\text{or, } d = 21.62mm$$

This value is close to the prior value. Therefore, the appropriate coil diameter from available wire, $d = 22mm$ *Answer*

Deflection of the inner spring, $\delta_i = \frac{8PD^3N}{Gd^4}$

$$= \frac{8 \times 1.5 \times 10^3 \times 180^3 \times 18}{80 \times 10^3 \times 22^4} mm$$

$$= 67.22mm \text{ Answer}$$

Problem P2.52:

A load P is supported by two steel springs in series as shown in Figure P2.52. The upp spring has number of turns of *20*, wire diameter of *20mm* and mean diameter *120mm* while the lower spring has number of turns of *16*, wire diameter of *16mm* an mean diameter of *100mm*. If the maximum shearing stress in any spring is not to exce *100MPa*, determine the maximum load that can be supported. Also determine th equivalent spring constant. Modulus of rigidity for steel is *80GPa*. Use Wahl factor f stress concentration effect.

Figure P2.52

Given Data:

Number turns of upper spring, $N_u = 20$

Wire diameter of upper spring, $d_u = 20mm$

Mean diameter of upper spring, $D_u = 120mm$

Number turns of lower spring, $N_l = 16$

Wire diameter of lower spring, $d_l = 16mm$

Mean diameter of lower spring, $D_l = 100mm$

Limiting shearing stress, $\tau_u = 100MPa$

Modulus of rigidity for steel, $G = 80GPa$

To Find:

Maximum load, P

Spring constant, k

Solution:

Spring index of the upper spring, $C_u = \dfrac{D_u}{d_u} = \dfrac{120}{20} = 6$

Spring index of the lower spring, $C_l = \dfrac{D_l}{d_l} = \dfrac{100}{16} = 6.25$

Wahl factor for the upper spring, $K_{W_u} = \dfrac{4C_u - 1}{4C_u - 4} + \dfrac{0.615}{C_u}$

$$= \frac{4\times6 - 1}{4\times6 - 4} + \frac{0.615}{C_u} = 1.2525$$

Wahl factor for the lower spring, $K_{W_l} = \dfrac{4\times6.25 - 1}{4\times6.25 - 4} + \dfrac{0.615}{6.25} = 1.2413$

We have for the maximum shearing stress with Wahl factor,

$$\tau = K_W \frac{8PD}{\pi d^3}$$

Using for the upper spring, $\tau_u = K_{W_u} \dfrac{8PD_u}{\pi d_u^2}$

$$\text{or, } \tau_a = 100 = 1.2525 \times \frac{8P \times 120}{\pi \times 20^3}$$

$$\text{or, } P = 2090.21N$$

Now using for the lower spring, $\tau_l = K_{W_l} \frac{8PD_l}{\pi d_l^2}$

$$\text{or, } \tau_a = 100 = 1.2413 \times \frac{8P \times 100}{\pi \times 16^3}$$

$$\text{or, } P = 1295.82N$$

The required load is the minimum of the two values, therefore,

$$P = 1295.82\,N = 13kN \quad \textit{Answer}$$

Total deflection of the two springs,

$$\delta = \frac{8PD_u^3 N_u}{Gd_u^4} + \frac{8PD_l^3 N_l}{Gd_l^4}$$

$$= \frac{8 \times 1295.82}{80 \times 10^3}\left[\frac{120^3 \times 20}{20^4} + \frac{100^3 \times 16}{16^4}\right] = 59.63$$

Therefore, the spring constant, $k = \frac{P}{\delta} = \frac{1295.82}{59.63} = 21.73 \frac{kN}{m}$ *Answer*

Problem P2.53:

A rigid bar hinged at O is supported by two steel springs as shown in Figure P2.53 spring A has number of turns of *15*, wire diameter of *10mm* and mean diamet *140mm* while the spring B has number of turns of *20*, wire diameter of *12mm* and diameter of *180mm*. Determine the maximum shearing stresses in both the springs A B for a dead load *P* of *200N*. Neglect the self weight of the bar.

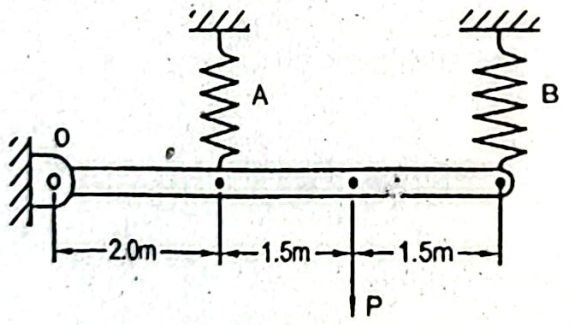

Figure P2.53

Given Data:

Load, $P = 200N$

Number turns of spring A, $N_A = 15$

Wire diameter of spring A, $d_A = 10mm$

Mean diameter of spring A, $D_m = 140mm$

Number turns of spring B, $N_B = 20$

Wire diameter of spring B, $d_B = 12mm$

Mean diameter of spring B, $D_B = 180mm$

To Find:

- Maximum stress in spring A, τ_A
- Maximum stress in spring B, τ_B

Solution:

Free body diagram of the entire bar is shown in the figure below.

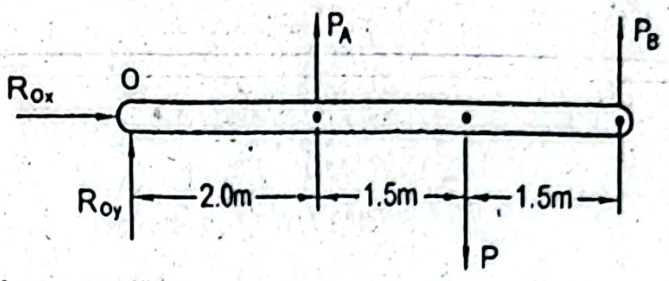

From static equilibrium condition,

$$+\circlearrowleft \sum M_o = 0$$

$$\text{or, } P_A \times 2 + P_B \times 5 - P \times 3.5 = 0$$

$$\text{or, } 2P_A + 5P_B = 200 \times 3.5 = 700N \qquad (i)$$

Position of the rigid bar in the deflected condition is shown in the following figure.

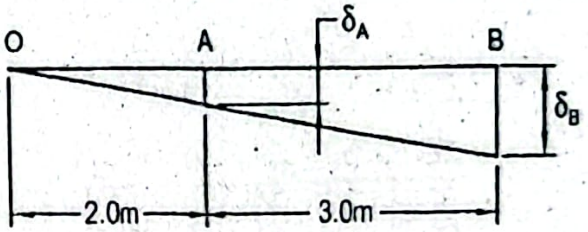

From the similar triangles, $\dfrac{\delta_A}{2} = \dfrac{\delta_B}{5}$

$$\text{or, } \delta_B = 2.5\delta_A \qquad (ii)$$

But we have, $\delta_A = \dfrac{8P_A D_A^3 N_A}{Gd_A^4}$ and $\delta_B = \dfrac{8P_B D_B^3 N_B}{Gd_B^4}$

Substituting these values of δ_A and δ_B in Equation (ii),

$$\frac{8P_B D_B^3 N_B}{Gd_B^4} = 2.5 \times \frac{8P_A D_A^3 N_A}{Gd_A^4}$$

Again substituting the values, $\dfrac{8P_B \times 180^3 \times 20}{G \times 12^4} = 2.5 \times \dfrac{8P_A \times 140^3 \times 15}{G \times 10^4}$

$$\text{or, } P_B = 1.83P_A$$

Substituting this value of P_B in Equation (i),

$$2P_A + 5 \times 1.83P_A = 700$$

$$\text{or, } P_A = 62.78N$$

Therefore, $P_B = 1.83 \times 62.78 = 114.89N$

Now the maximum stress in the spring A,

$$\tau_A = \frac{P_A}{A_A}\left(1 + \frac{2D_A}{d_A}\right)$$

$$= \frac{62.78 \times 4}{\pi \times 10^2}\left(1 + \frac{2 \times 140}{10}\right) MPa$$

$$= 23.18 MPa \text{ Answer}$$

and the maximum stress in the spring B,

$$\tau_B = \frac{P_B}{A_B}\left(1 + \frac{2D_B}{d_B}\right)$$

$$= \frac{114.89 \times 4}{\pi \times 12^2}\left(1 + \frac{2 \times 180}{12}\right)$$

$$= 31.49 MPa \text{ Answer}$$

Problem P2.54:

A dead weight *40kg* is suspended by two steel springs using a weightless bar as in Figure P2.54. Before and after suspension of the dead weight the bar i horizontal. Each spring has number of turns of *20* and coil diameter of *12mm* spring A has mean diameter of *120mm*. Determine the maximum shearing stress i spring. Consider modulus of rigidity of steel $G = 80GPa$.

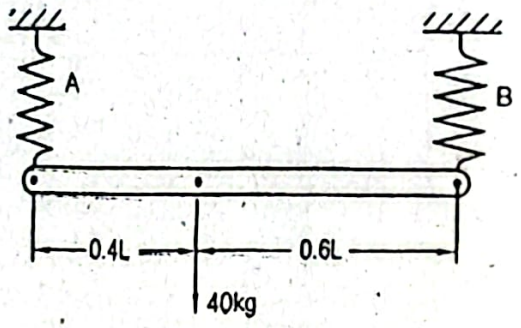

Figure P2.54

Given Data:

Coil diameter, $d = 12mm$

Mean diameter of spring A, $D_A = 120mm$

Number turns, $N = 20$

Dead weight, $W = 40kg$

Modulus of rigidity for steel, $G = 80GPa$

To Find:

- Maximum shearing stress in spring A, τ_A
- Maximum shearing stress in spring B, τ_B

Solution:

Free body diagram of the entire system is shown in the figure below.

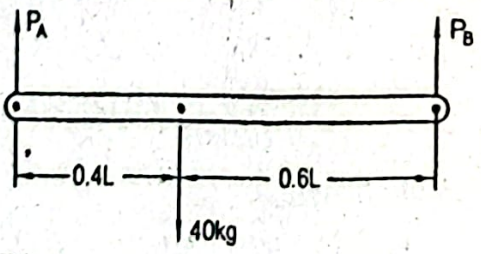

In static equilibrium condition,

$$+\circlearrowleft \sum F_y = 0 :$$

or, $P_A + P_B - 40 \times 9.81 = 0$

or, $P_A + P_B = 392.4\,N$ $\quad (i)$

$$+\circlearrowleft \sum M_A = 0$$

or, $P_B \times L - 40 \times 9.81 \times 0.4L = 0$

or, $P_B = 156.96\,N$

Therefore, $P_A = 392.4 - P_B = 392.4 - 156.96 = 235.44N$

Since before and after suspension of the dead weight the bar remains horizontal, the spring deflection is same for both the springs.

Therefore, $\delta_A = \delta_B$

or, $\frac{8P_A D_A^3 N}{Gd^4} = \frac{8P_B D_B^3 N}{Gd^4}$

or, $P_A D_A^3 = P_B D_B^3$

or, $235.44 \times 120^3 = 156.96 D_B^3$

or, $D_B = 137.37mm$

Here D_B is the mean diameter of the spring B.

In static condition we have for the maximum shearing stress,

$$\tau_{max} = \frac{P}{A}\left(1 + \frac{2D}{d}\right)$$

Therefore, the maximum shearing stress in the spring A,

$$\tau_A = \frac{P_A}{A_A}\left(1 + \frac{2D_A}{d}\right)$$

$$= \frac{235.44 \times 4}{\pi \times 12^2}\left(1 + \frac{2 \times 120}{12}\right)$$

$$= 43.72MPa \text{ Answer}$$

and the maximum stress in the spring B,

$$\tau_B = \frac{P_B}{A}\left(1 + \frac{2D_B}{d}\right)$$

$$= \frac{156.96 \times 4}{\pi \times 12^2}\left(1 + \frac{2 \times 137.37}{12}\right)$$

$$= 33.16MPa \text{ Answer}$$

Problem P2.55:

A dead weight W is supported at the end of a rigid bar hinged at the point B as shown in Figure P2.55. The rigid bar is supported by two identical steel springs. The mean diameter of each spring is $180mm$, wire diameter is $20mm$ and number of turns is 25. Determine the maximum weight that can be supported if the maximum shearing stress in each spring is limited to $150MPa$.

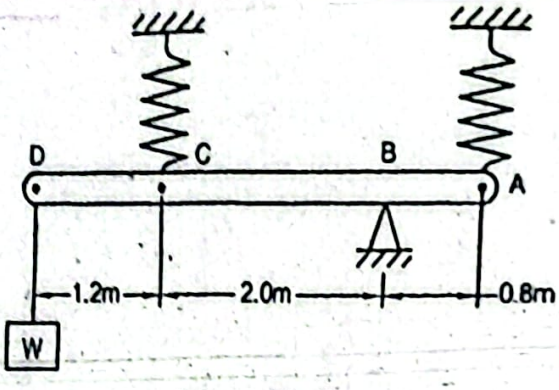

Figure P2.55

Given Data:

Wire diameter of each spring, $d = 20mm$

Mean diameter of each spring, $D = 180mm$

Number of turns of each spring, $N = 25$

Limiting shearing stress, $\tau_a = 150MPa$

To Find:

- Maximum dead weight, W

Solution:

Free body diagram of the entire bar is shown in the figure below.

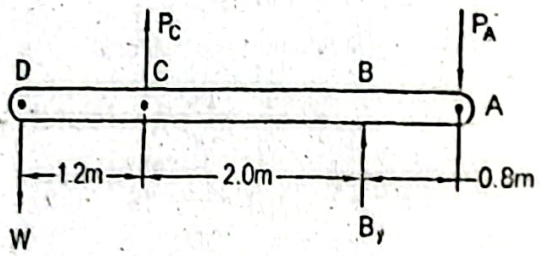

In static equilibrium condition,

$$+\circlearrowleft \sum M_B = 0 :$$

$$\text{or, } -P_A \times 0.8 - P_C \times 2 + W \times 3.2 = 0$$

$$\text{or, } 3.2W = 0.8P_A + 2P_C$$

Position of the rigid bar in the deflected condition under the action of the load is sho below.

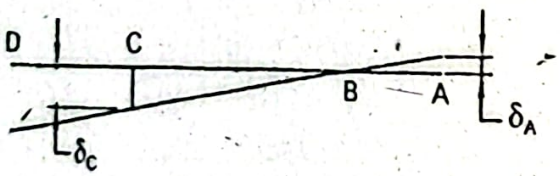

From the similar triangles, $\frac{\delta_C}{\delta_A} = \frac{2}{0.8}$

$$\text{or, } \delta_C = 2.5\delta_A \quad (ii$$

We have deflection for the spring A,

$$\delta_A = \frac{8P_A D^3 N}{Gd^4}$$

and that for the spring C, $\delta_C = \frac{8P_C D^3 N}{Gd^4}$

Substituting these values in Equation *(ii)* and simplifying,

$$P_C = 2.5P_A$$

Substituting the value of P_C in Equation *(i)*,

$$3.2W = 0.8P_A + 2\times 2.5P_A$$

$$\text{or, } P_A = 0.552W$$

Therefore, $$P_C = 2.5\times 0.552W = 1.38W$$

Now the maximum shearing stress in the spring A,

$$\tau_A = \frac{P_A}{A_A}\left(1+\frac{2D}{d}\right)$$

$$\text{or, } \tau_a = 150 = \frac{0.552W\times 4}{\pi\times 20^2}\left(1+\frac{2\times 280}{20}\right)$$

$$\text{or, } W = 4.49\times 10^3 N = 4.49kN$$

and the maximum shearing stress in the spring C,

$$\tau_C = \frac{P_C}{A_C}\left(1+\frac{2D}{d}\right)$$

$$\text{or, } \tau_a = 150 = \frac{1.38W\times 4}{\pi\times 20^2}\left(1+\frac{2\times 180}{20}\right)$$

$$\text{or, } W = 1.80\times 10^3 N = 1.80kN$$

Therefore, the required maximum weight, $W = 1.80kN$ ***Answer***

Problem P2.56:

A dead weight W is supported by a weightless rigid bar which is suspended by three steel springs as shown in Figure P2.56. The springs A and B are identical and each of them has mean diameter of *120mm*, coil diameter of *12mm* and number of turns of *20*. While the spring C has mean diameter of *180mm*, coil diameter of *20mm* and number of turns of *40*. Determine the maximum weight W that can be supported if the maximum shearing stress in each spring is limited to *160MPa*.

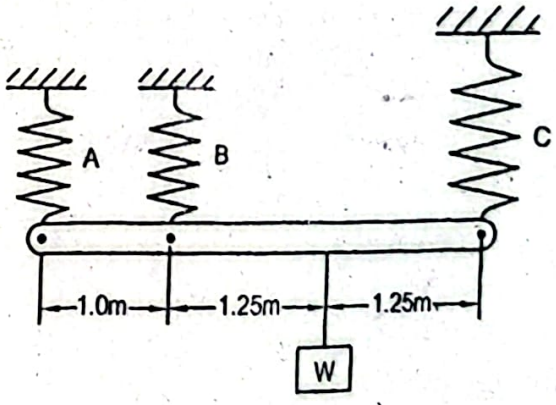

Figure P2.56

Given Data:

Mean diameter, $D_A = D_B = 120mm$

Coil diameter, $d_A = d_B = 12mm$

Number of turns, $N_A = N_B = 20$

Mean diameter, $D_C = 180mm$

Coil diameter, $d_C = 20mm$

Number of turns, $N_C = 40$

Limiting shearing stress, $\tau_a = 160MPa$

To Find:

- Maximum weight, W

Solution:

Free body diagram of the entire bar is shown in the figure below.

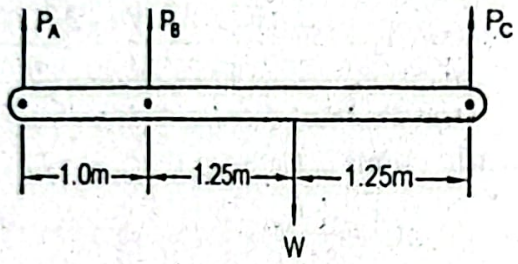

In static equilibrium condition,

$$+\circlearrowleft \sum F_y = 0$$

or, $P_A + P_B + P_C - W = 0$

or, $P_A + P_B + P_C = W$

$$+\circlearrowleft \sum M_C = 0$$

or, $-P_A \times 3.5 - P_B \times 2.5 + W \times 1.25 = 0$

or, $P_B = 0.5W - 1.4P_A$

Position of the bar in the deflected condition after the application of the weight is sh below.

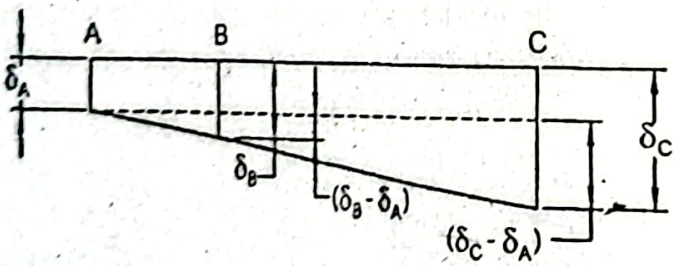

From the similar triangles,

$$\frac{\delta_C - \delta_A}{3.5} = \frac{\delta_B - \delta_A}{1.0}$$

or, $\delta_C = 3.5\delta_B - 2.5\delta_A$

We have the deflection for the spring A,

$$\delta_A = \frac{8P_A D_A^3 N_A}{Gd_A^4} = \frac{8P_A \times 120^3 \times 20}{G \times 12^4} = \frac{13.399 \times 10^3 \times P_A}{G}$$

Deflection for the spring B,

$$\delta_B = \frac{8P_B D_B^3 N_B}{G d_B^4} = \frac{8P_B \times 120^3 \times 20}{G \times 12^4} = \frac{13.333 \times 10^3 \times P_B}{G}$$

and the deflection for the spring C,

$$\delta_C = \frac{8P_C D_C^3 N_C}{G d_C^4} = \frac{8P_C \times 180^3 \times 40}{G \times 20^4} = \frac{11.664 \times 10^3 \times P_C}{G}$$

Substituting these values of deflections in Equation *(iii)*,

$$\frac{11.664 \times 10^3 \times P_C}{G} = 3.5 \times \frac{13.333 \times 10^3 \times P_B}{G} - 2.5 \times \frac{13.333 \times 10^3 \times P_A}{G}$$

$$\text{or, } P_C = 4P_B - 2.858P_A \qquad (iv)$$

Substituting this value in Equation *(i)*,

$$P_A + P_B + 4P_B - 2.858P_A = W$$

$$\text{or, } P_B = 0.2W + 0.372P_A \qquad (v)$$

From Equations *(ii)* and *(v)*,

$$0.5W - 1.4P_A = 0.2W + 0.372P_A$$

$$\text{or, } P_A = 0.169W$$

Substituting the value of P_A in Equation (*v*),

$$P_B = 0.2W + 0.372 \times 0.169W = 0.263W$$

and substituting theses values in Equation (*i*),

$$P_C = W - P_A - P_B = W - 0.169W - 0.263W = 0.568W$$

Shearing stress in the spring A,

$$\tau_A = \frac{P_A}{A_A}\left(1 + \frac{2D_A}{d_A}\right)$$

$$\text{or, } \tau_u = 160 = \frac{0.169W \times 4}{\pi \times 12^2}\left(1 + \frac{2 \times 120}{12}\right)$$

$$\text{or, } W = 5.1 \times 10^3 N = 5.10kN$$

Shearing stress in the spring B,

$$\tau_B = \frac{P_B}{A_B}\left(1 + \frac{2D_B}{d_B}\right)$$

$$\text{or, } \tau_u = 160 = \frac{0.263W \times 4}{\pi \times 12^2}\left(1 + \frac{2 \times 120}{12}\right)$$

$$\text{or, } W = 3.28 \times 10^3 N = 3.28kN$$

Shearing stress in the spring C,

$$\tau_A = \frac{P_C}{A_C}\left(1 + \frac{2D_C}{d_C}\right)$$

$$\text{or, } \tau_u = 160 = \frac{0.568W \times 4}{\pi \times 20^2}\left(1 + \frac{2 \times 180}{20}\right)$$

$$\text{or, } W = 4.66 \times 10^3 N = 4.66kN$$

Therefore, the spring B will reach ... ... d m
weight,

$$W = 3.28kN \text{ Answer}$$

EXERCISES

Problem E2.1:

A circular steel shaft is subjected to a torque of $15kNm$. If the angle of twist in t is not to exceed 2^0 in a length of $4m$, determine the minimum diameter of th Also determine the maximum shearing stress developed in the shaft. Consider mo rigidity $G = 80GPa$.

Ans.: $d_{min} = 102.28mm;\ \tau_{max} = 71.$

Problem E2.2:

A hollow circular shaft transmits $10kW$ of power at $1500rpm$. If the outer dian the shaft is twice the inner diameter and the shearing stress in the shaft is lin $40MPa$, determine the diameter of the shaft.

Ans.: $d_o = 20$

Problem E2.3:

A steel shaft of diameter $60mm$ is connected with four gears which are subje torques as shown in Figure E2.3. Determine the relative angle of twist of the gear respect to the gear D if the modulus of rigidity $G = 80GPa$.

Ans.: $\theta_{A/D} =$

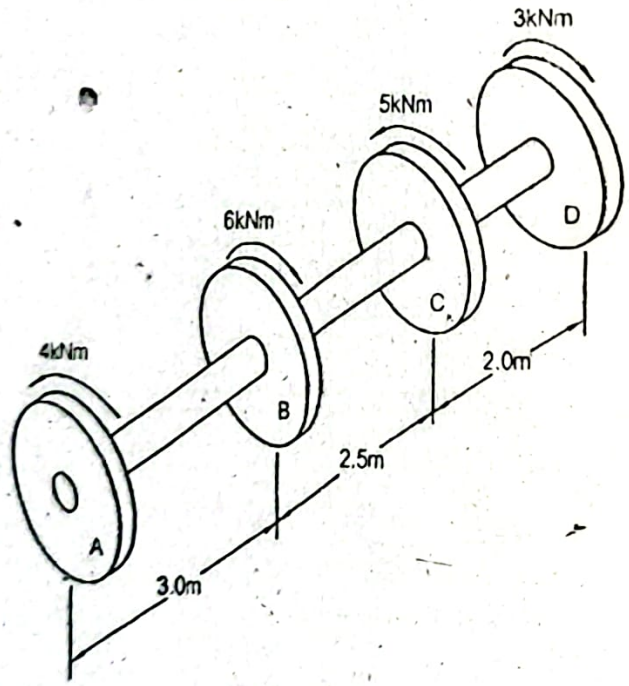

Figure E2.3

Problem E2.4:

A circular shaft of $4m$ length and $120mm$ diameter is fixed at its both ends as sho Figure E2.4. The shaft is loaded by two couples of $3kNm$ and $2.5kNm$. Determin resisting torques at the fixed ends.

Ans.: $T_A = 2.913kNm$ ↺; $T_D = 2.587kN$

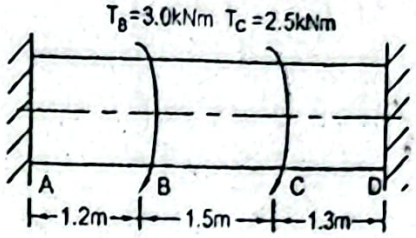

Figure E2.4

Problem E2.5:

A compound shaft is fabricated from a solid brass shaft of *50mm* diameter and a hollow aluminum shaft of inside diameter of *50mm*. The solid brass shaft slides freely through the aluminum shaft. Both the shafts have the same length. After fastening the two shafts rigidly at the ends, a torque of *2.0kNm* is applied. If the maximum shearing stress in the brass shaft reaches to its allowable value of *30MPa*, determine the outside diameter of the aluminum shaft and the corresponding maximum shearing stress in the aluminum shaft. Modulus of rigidity of brass and aluminum are respectively *40GPa* and *30GPa*.

Ans.: $d_o = 67.33mm;\ \tau_{al} = 30.31MPa$

Problem E2.6:

A compound shaft of bronze and steel is attached to rigid supports as shown in Figure E2.6. The diameters of the bronze and steel segments are respectively *80mm* and *60mm*. Modulus of rigidity of bronze and steel are respectively *35GPa* and *80GPa*. Allowable shearing stresses in bronze and steel are respectively *50MPa* and *80MPa*. Determine the maximum torque that can be applied at the junction point B of the shaft.

Ans.: *6.91kNm*

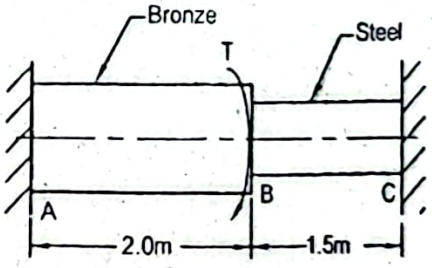

Figure E2.6

Problem E2.7:

A flanged coupling consists of *12* numbers of bolts, each of *15mm* diameter on a pitch circle of *500mm* diameter with equal interspacing and *8* numbers of bolts on a pitch circle of *400mm* diameter with equal interspacing. Consider the allowable shearing stress in bolts $\tau_a = 50MPa$. Determine the bolt diameter on the inner pitch circle so that the limiting shearing stress reaches in both the bolts on the outer and inner pitch circles simultaneously. Also determine the corresponding torque capacity of the coupling.

Ans.: $d_{bi} = 13.42mm;\ T = 37.82kNm$

Problem E2.8:

A plate is riveted to a vertical surface by five rivets of equal size as shown in Figure E2.8. A load applied to the riveted connection is *10kN*. Determine the size of the rivets if the allowable shearing stress is *65MPa*.

Ans.: $d = 9.36mm$

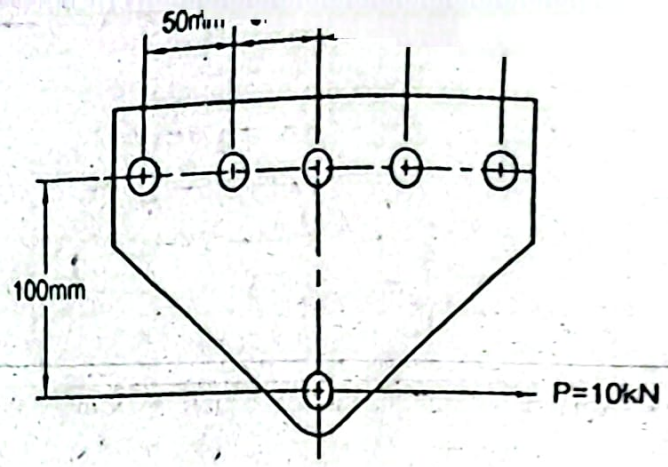

Figure E2.8

Problem E2.9:

An aluminum tube of rectangular cross-section of $60mm \times 100mm$ with wall thicl $3mm$ is subjected to a torque of $2.5kNm$. Determine average shearing stress in ea Now if due to the defective production wall thickness becomes nonuniform with two adjacent walls and $4mm$ in other two walls, determine the average shearing for both $2mm$ and $4mm$ walls.

Ans.: $\tau = 75.36MPa$ (*uniform wall*);

$\tau = 113.04MPa$ *for* $t = 2mm$; $\tau = 56.52MPa$ *for t*

Problem E2.10:

One shaft of rectangular cross-section with $b = 2c$ and another one of square section are loaded by the same torque. If the cross-section area of each of shafts is determine the ratio of the maximum shearing stresses of the square and recta shafts.

Ans.: $R =$

Problem E2.11:

A helical compression spring of mean diameter of $150mm$ supports an axial l $1.2kN$. If the number of turns of the spring is 20 and the maximum shearing stress coil is not to exceed $75MPa$, determine the coil diameter using Wahl factor. determine the deflection of the spring corresponding to this load. Consider modu rigidity $G = 80GPa$.

Ans.: $d = 19.37mm$; $\delta = 57.5$

Problem E2.12:

Two concentric helical compression springs each of $10mm$ wire diameter suppo axial static load of P. The mean diameters of the outer and inner springs are respect $120mm$ and $80mm$. If the maximum shearing stress in the coil is not to exceed 25 determine the maximum load P that can be supported. Free length and number of of each of the springs are same.

Ans.: $P = 149$

Problem E2.13:

A dead weight of $W\,kg$ is suspended by two helical steel springs of the same wire diameter using a bar of negligible weight as shown in Figure E2.13. The bar remains horizontal before and after suspension of the weight. Determine the ratio a/b of the bar if the ratios of the mean diameters and number of coils of the springs A and B are respectively 1.5 and 1.2.

Ans.: $a/b = 4.05$

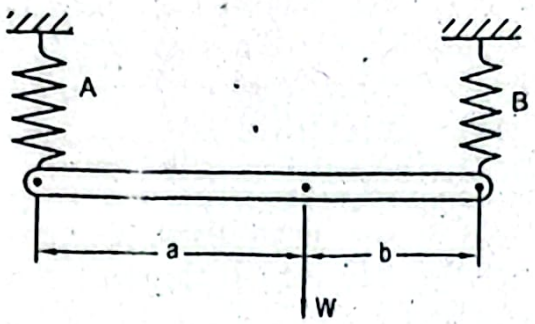

Figure E2.13

Chapter III

Shear and Moment in Beams

Question 3.1: What do you mean by a beam? Discuss about the types of supports in beams and resistances which they offer.

Answer:

A structural member designed to support loads perpendicular to the axis applied various points along the member is known as a *beam*. The loads may be inclined as w which will have components perpendicular to the axis. Beams may be both straight a curved. Beams may have various types of cross-sections, e.g. square, rectangul circular, triangular, *I*-section etc.

The three common types of supports are fixed, pinned or roller. The symbols of t various supports are presented in Figure 3.1. The resistances that the three common typ of supports can offer are shown in Figure 3.2. A *pinned support* resists the horizontal ar vertical forces, a *roller support* resists only the vertical force, on the other hand, a *fixe support* resists the horizontal and vertical forces as well as the moment.

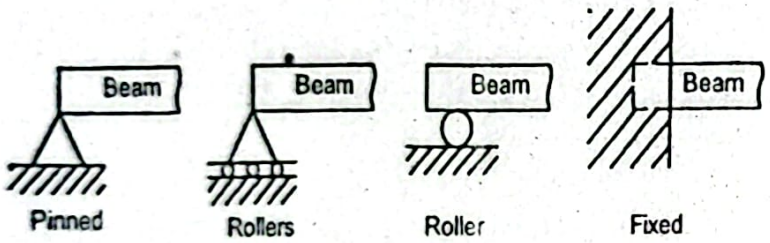

Figure 3.1: Symbols of Various Supports.

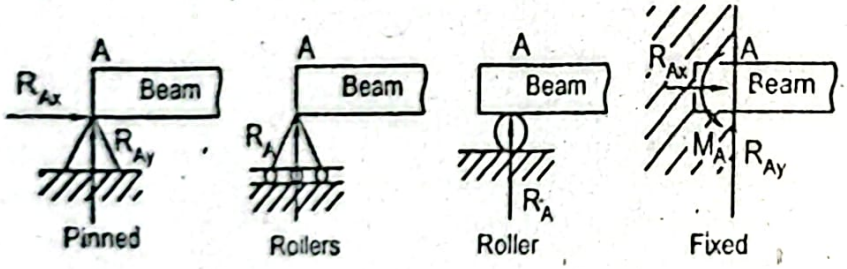

Figure 3.2: Resistances that Various Supports offer.

Question 3.2: Discuss the various types of loadings in beams.

Answer:

Beams support two types of loads:

(a) Concentrated

and (b) Distributed

(a) A *concentrated load* acts at a point. In reality when the load acts over a small distance, it is considered that it acts at a point. In Figure 3.3a a concentrated load is shown.

(b) On the other hand, a *distributed load* acts over a considerable length of the beam. In Figure 3.3b a distributed load is shown. Again distributed load may be of different types. Of them uniformly distributed and uniformly varying loads are important. Distributed

load may also be nonuniform. Uniformly varying load and nonuniform distributed load are shown in Figures 3.1c and 3.1d respectively.

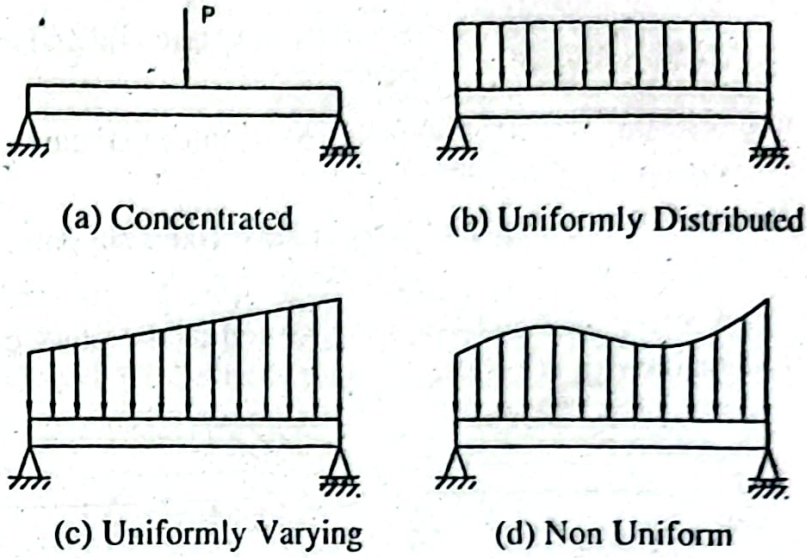

(a) Concentrated (b) Uniformly Distributed

(c) Uniformly Varying (d) Non Uniform

Figure 3.3: Types of Loadings in Beams.

Question 3.3: Discuss about the different types of beams.

Answer:

Beams are primarily divided into two groups:

(a) Statically determinate beam

(b) Statically indeterminate beam

(a) A beam is said to be *statically determinate* when the values of the reactions can be obtained by using the conditions of static equilibrium. That is,

$$\Sigma P_x = 0,\ \Sigma P_y = 0 \text{ and } \Sigma M = 0 \qquad (3.1)$$

The number of unknowns is equal to the number of equations obtained from the relations of equilibrium.

Statically determinate beams are classified as:

(1) Simply supported beam

(2) Cantilever beam

(3) Overhanging beam

(1) Simply supported beam: When a beam is supported at the ends by either the rollers or pins, it is called the *simply supported beam* or *simple beam* (Figure 3.4a).

(2) Cantilever beam: A beam fixed at one end and free at the other end is known as the *cantilever beam* (Figure 3.4b)

(3) Overhanging beam: When a beam projects beyond a support, it is called *overhanging beam* (Figure 3.4c).

(b) In contrast a beam is said to be *statically indeterminate* when the values of the eactions cannot be determined by using the conditions of static equilibrium only. To olve the reactions additional equations from the stress-strain relations are obtained.

Statically indeterminate beams are classified as:

(1) Continuous beam

(2) Fixed beam

(3) Beam fixed at one end and simply supported at t other end

(1) Continuous beam: When a beam consists of intermediate supports, it is called tl *continuous beam* (Figure 3.4d).

(2) Fixed beam: When the ends of a beam have fixed supports, it is called the *fixe beam* (Figure 3.4e).

(3) Beam fixed at one end and simply supported at the other end: The name itse implies its nature (Figure 3.4f).

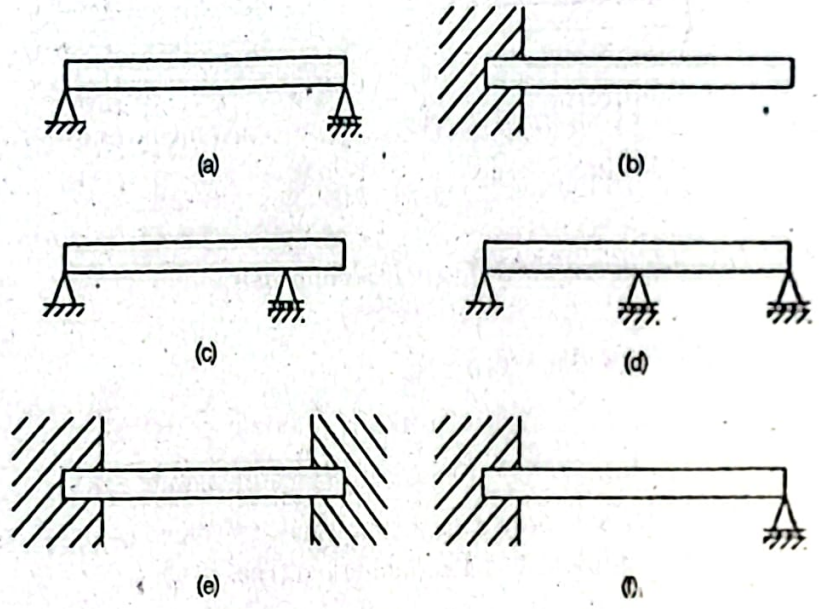

Figure 3.4: Types of Beams.

Question 3.4: Describe shear and bending moment in brief.

Answer:

When the load is applied on a beam as shown in Figure 3.5a, the fibers at the top of the beam are shortened and the fibers at the bottom are elongated. There is a surface in between the top and the bottom fibers where the original length is unchanged and the fibers are not stressed. This surface is called the *neutral surface*. The line of intersection of the neutral surface and any vertical cross-section is known as the *neutral axis*.

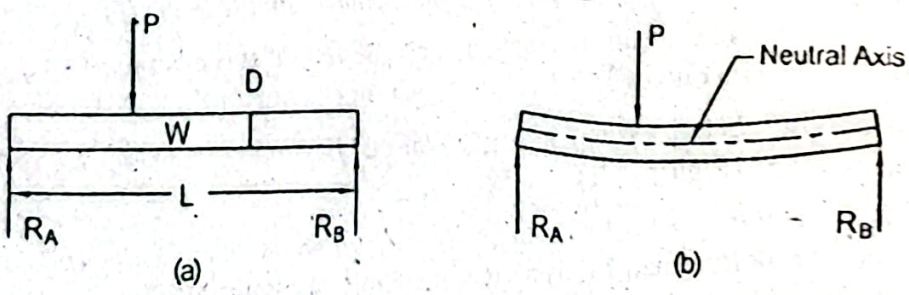

Figure 3.5: Change of Shape of a Beam under Loading.

The free body diagram of the beam with section at D is shown in Figure 3.6. The resultants of the compressive and tensile stresses on the beam section are respectively C and T. From the static equilibrium condition, we know,

$$\Sigma P_x = 0: \text{Therefore, } T = C$$

$$\text{and, } \Sigma P_y = 0: \text{Therefore, } R_A - P - W_o + V = 0$$

$$\text{or, } V = R_A - P - W_o \tag{3.2}$$

where, V is the algebraic sum of the external forces on the left segment and V is called the *shear force*. The force V exerted by one segment on the other is known as the *resisting shear* and is the resultant of all the shearing stresses on the section.

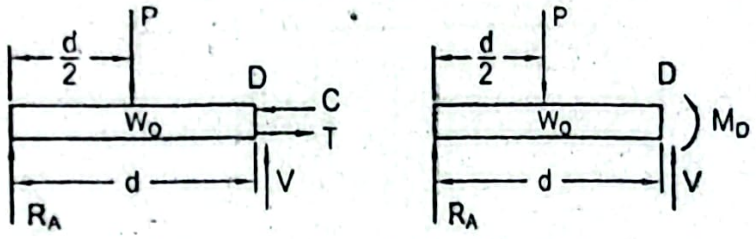

Figure 3.6: Free Body Diagram of Beam Section.

The algebraic sum of the moments of all the external forces on the segment is called the *bending moment* at the section, M_D and for the static equilibrium condition, one finds,

$$\Sigma M_D = 0$$

$$\text{or, } M_D = R_A d - \frac{Pd}{2} - \frac{W_o d}{2} \tag{3.3}$$

The sum of the moments of C and T (*resisting moment*) must be equal and opposite in sense to the algebraic sum of the moments of all the external forces R_A, P and W_o. Therefore, we can write,

$$M_D = Ca + Tb \tag{3.4}$$

Bending moment is said to be positive if the shape of the beam is concave up and negative if the shape of the beam is concave down as shown in Figure 3.7a while shear is considered to be positive if the segment of the beam to the left of the section tends to move up with respect to the segment to the right as shown in Figure 3.7b.

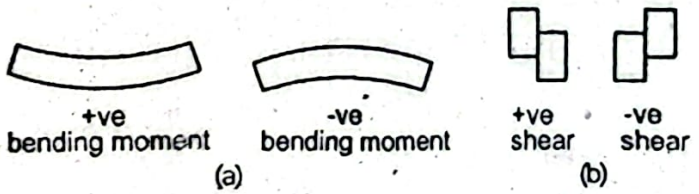

Figure 3.7: Sign Convention of Bending Moment and Shear.

In a section of a beam where the shear is zero and the bending moment is maximum is known as the *dangerous section*. In an overhanging beam for some portion curvature is

concave up and then down for the remainder. [illegible] point where curvature reverses is called the *inflection point*. At the inflection point the ben moment is zero.

A further example of shear force and bending moment is also given here for a canti beam with a concentrated load of P at its free end as shown in Figure 3.8. In a secti the cantilever beam at a distance of x from its free end shear force V_x and ben moment M_x are developed. In the static equilibrium condition,

$$+\uparrow \Sigma F_y = 0: \; V_x - P = 0 \text{ or, } V_x = P$$

$$\Sigma M = 0: \; M_x - P \times x = 0 \text{ or, } M_x = Px$$

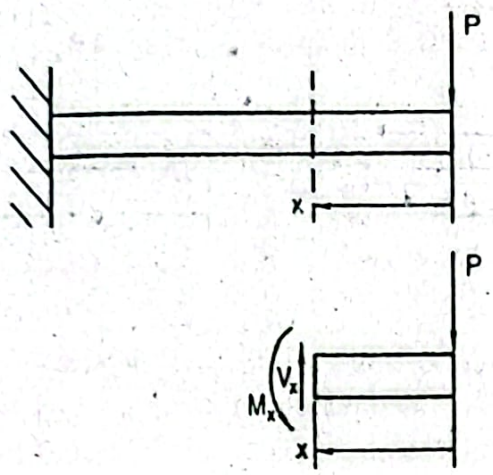

Figure 3.8: Shear Force and Bending Moment in a Section of a Beam.

Question 3.5: Find a relation among load, shear and bending moment.

Answer:

In Figure 3.9a a beam is shown with an arbitrary loading. Free body diagram of segment of this beam with an elemental length of dx is shown in Figure 3.9b in enlarged view. At the left of this segment the shear is V and the moment is M while at right the shear is $V + dV$ and the moment is $M + dM$. Over the small dx the load may assumed as constant of intensity w, although the loading is variable as shown.

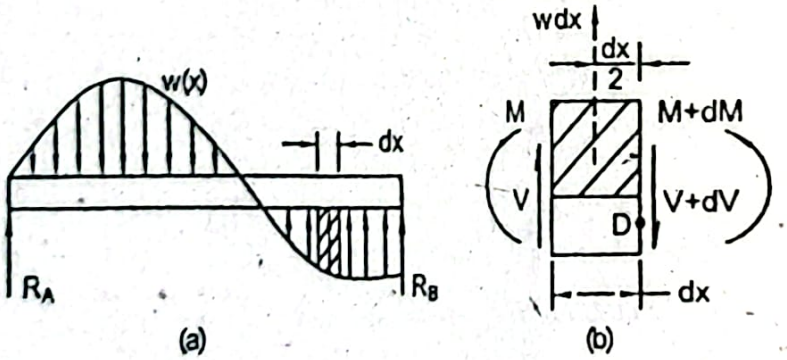

Figure 3.9: A Beam with Arbitrary Loading.

From Figure 3.9b in the static equilibrium condition considering the summation of vertical forces, we find,

$$\Sigma P_y = 0: \text{ or, } V + wdx - (V + dV) = 0$$

which reduces to $$dV = wdx$$

$$\text{or, } w = \frac{dV}{dx} \tag{3.7}$$

For the loading in the downward direction the relation of load and shear will be as,

$$-w = \frac{dV}{dx}$$

Now by summing the moments about a point D, one finds,

$$\Sigma M_D = 0: \text{ or, } M + Vdx + (wdx)\frac{dx}{2} - (M + dM) = 0$$

Neglecting the square of the differential element compared to the other terms, one obtains,

$$dM = Vdx$$

$$\text{or, } V = \frac{dM}{dx} \tag{3.8}$$

Integrating Equation (3.7), we find.

$$\int_{V_1}^{V_2} dV = \int_{x_1}^{x_2} wdx$$

$$\text{or, } V_2 - V_1 = \Delta V = (Area)_{load} \tag{3.9}$$

Similarly, integrating Equation (3.8), one finds,

$$\int_{M_1}^{M_2} dM = \int_{x_1}^{x_2} Vdx$$

$$\text{or, } M_2 - M_1 = \Delta M = (Area)_{shear} \tag{3.10}$$

Equation (3.7) gives the slope of the shear diagram,

$$w = \frac{dV}{dx} = \text{Slope of shear diagram} \tag{3.11}$$

Equation (3.8) gives the slope of the moment diagram,

$$V = \frac{dM}{dx} = \text{Slope of moment diagram} \tag{3.12}$$

These relations among the load, shear and bending moment are useful in constructing shear force and bending moment diagrams.

The slope is *positive* when the value of shear force, V in the shear force diagram or bending moment, M in the bending moment diagram increases (directed up) with the x-axis. On the other hand the slope is *negative* when this value decreases (directed downward) with the x-axis. For the x-axis occurring to the right, the following principles for slope can be used,

+ slope =

- slope =

To apply the relations of load, shear and bending moment for constructing shear for and bending moment diagrams, a simply supported beam carrying the variable loading considered as shown in Figure 3.10a. For the downward loading (Figure 3.10a) usi Equation (3.11) the shear diagram slopes continuously down to the right as shown Figure 3.10b. The inclination varies directly with the corresponding ordinate of the lo diagram. The slope is the steepest, where the load ordinate is maximum and it horizontal or zero at the ends where the intensity of ordinate is zero.

Similarly, using Equation (3.12) the slope of the moment diagram in Figure 3.10c obtained by the corresponding ordinates of the shear diagram. At the left portion of t shear diagram, its value is positive and decreasing in magnitude. It indicates that t moment diagram slopes continuously up to the right with decreasing inclination. T slope is zero where the shear ordinate is zero. It can be further observed from here that the shear ordinates change sign and become increasingly larger in the negative side, t moment diagram correspondingly slopes down to the right more steeply. Furthermore, is seen from this figure that at the ordinate of zero shear the maximum bending mome occurs.

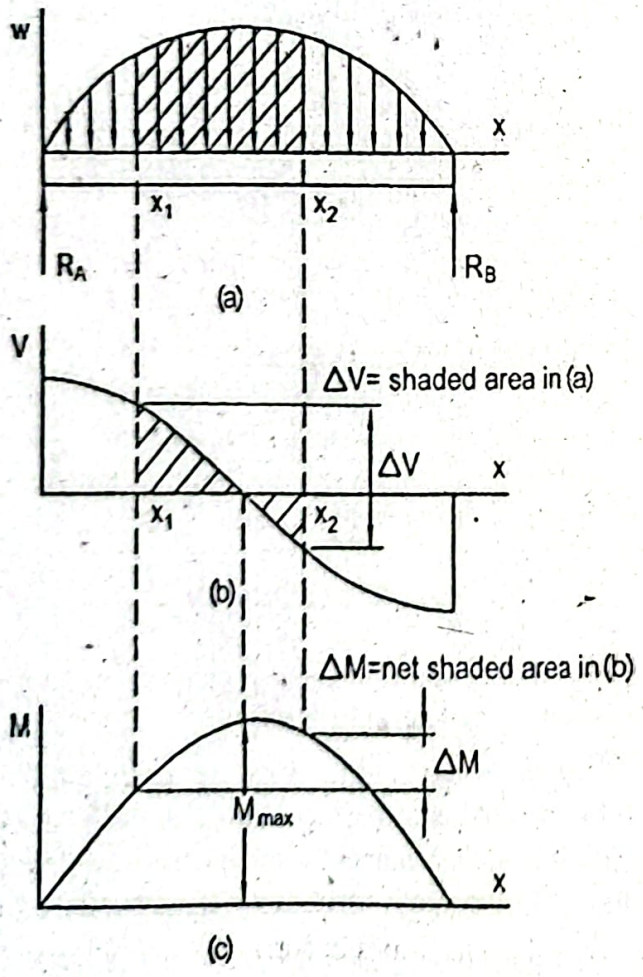

Figure 3.10: Relation among Load, Shear and Moment Diagrams.

For the maximum bending moment we find,

$$\frac{dM}{dx}=0$$

Therefore, from Equation (3.12) for maximum bending moment shear force, $V=0$. In other words, bending moment will be maximum where the shear force crosses the x-axis.

SOLVED PROBLEMS

Problem P3.1:

Write the equations of shear force and bending moment for a simply supported beam subjected to a concentrated load P located asymmetrically as shown in Figure P3.1. Also draw the shear force and bending moment diagrams.

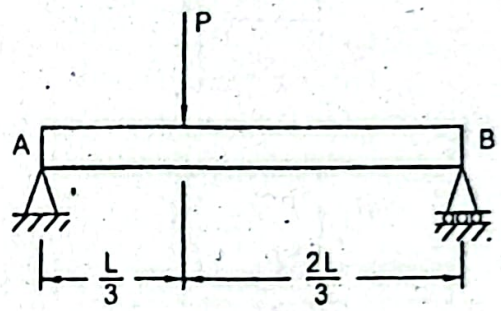

Figure P3.1

Given Data:

Length of beam $= L$

Concentrated load $= P$

To Find:

- Equations of shear force and bending moment
- Shear force and bending moment diagrams

Solution:

Free body diagram of the entire beam is shown below.

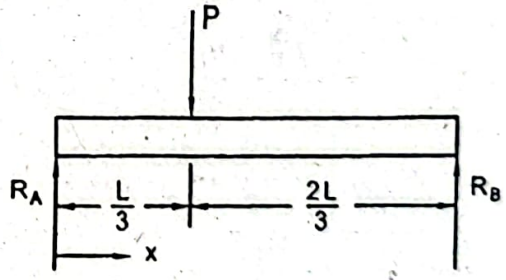

In static equilibrium condition,

$$+\uparrow\sum F_y=0$$

or, $R_A+R_B-P=0$

or, $R_A+R_B=P$

$$+\circlearrowleft\sum M_A=0$$

$$R_B\times L-\frac{P\times L}{3}=0$$

$$\text{or, } R_B = \frac{P}{3}$$

Therefore, $$R_A = P - R_B = P - \frac{P}{3} = \frac{2P}{3}$$

To find equations of shear force,

For $0 < x < L/3$ $$V_x = R_A = \frac{2P}{3}$$

For $L/3 < x < L$ $$V_x = R_A - P = \frac{2P}{3} - P = -\frac{P}{3}$$

Free body diagram of a section of the beam at the left of the concentrated load considered as follows.

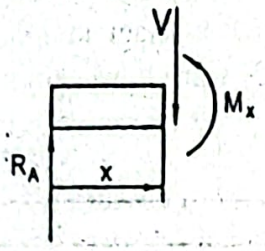

Bending moment,

For $0 < x < L/3$ $$M_x = R_A x$$
$$= \frac{2Px}{3}$$

At $x = L/3$, $$M_{x=L/3} = \frac{2PL}{9}$$

Free body diagram of a section of the beam at the right of the concentrated load considered as shown in the following figure.

Bending moment,

For $L/3 < x < L$ $$M_x = R_A x - P\left(x - \frac{L}{3}\right)$$
$$= \frac{2Px}{3} - Px + \frac{PL}{3}$$
$$= -\frac{Px}{3} + \frac{PL}{3}$$

At $x = L/3$ $$M_{x=L/3} = -\frac{PL}{9} + \frac{PL}{3} = \frac{2PL}{9}$$

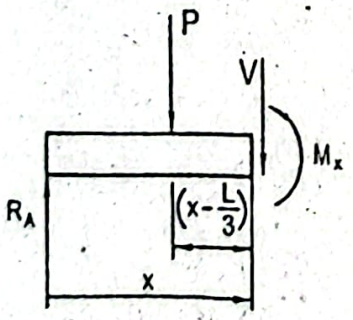

Shear force and bending moment diagrams are drawn as follows.

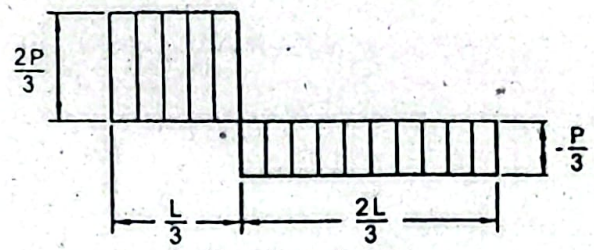

Shear force diagram

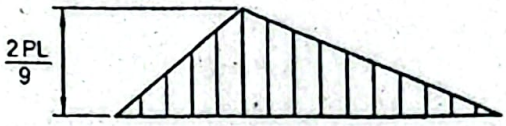

Bending moment diagram

Problem P3.2:

A simply supported beam carries two concentrated loads, each of P located symmetrically as shown in Figure P3.2. Write the equations of shear force and bending moment. Draw also the shear force and bending moment diagrams.

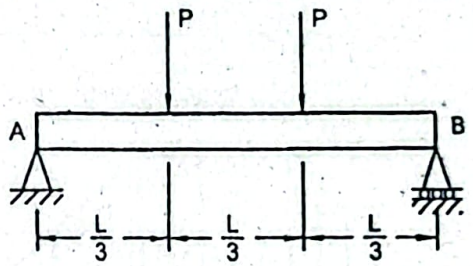

Figure P3.2

Given Data:

Length of beam $= L$

Each concentrated load $= P$

To Find:

- Equations of shear force and bending moment
- Shear force and bending moment diagrams

Solution:

Free body diagram of the entire beam is shown below.

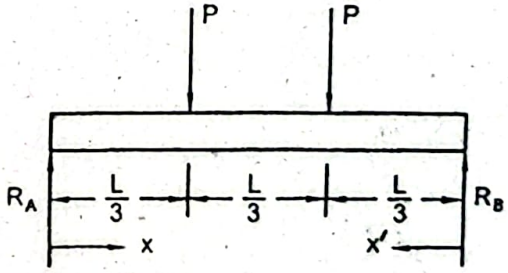

In static equilibrium condition,

$$+\uparrow \sum F_y = 0$$

$$\text{or, } R_A + R_B - 2P = 0$$

$$\text{or, } R_A + R_B = 2P$$

$$+\circlearrowleft \sum M_A = 0$$

$$\text{or, } R_B \times L - P \times \frac{2L}{3} - P \times \frac{L}{3} = 0$$

$$\text{or, } R_B = P$$

Therefore, $R_A = P$

To find the equations of shear force,

For $0 < x < L/3$ $\quad V_x = R_A = P$

For $L/3 < x < 2L/3$ $\quad V_x = R_A - P$

$= P - P = 0$

For $0 < x' < L/3$ $\quad V_{x'} = -R_B = -P$

Shear force and bending moment diagrams are drawn as follows.

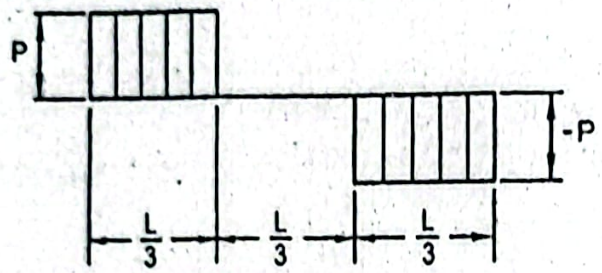

Shear force diagram

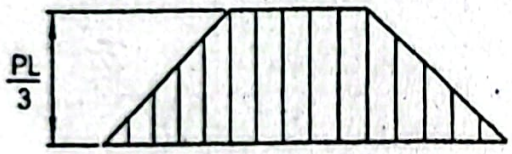

Bending moment diagram

Now to find the equations of bending moment,

For $0 < x < L/3$ $\quad M_x = R_A x = Px$

At $x = L/3$, $\quad M_{x=L/3} = \frac{PL}{3} = M_{max}$

For $L/3 < x < 2L/3$ $\quad M_x = R_A x - P\left(x - \frac{L}{3}\right)$

$= Px - Px + \frac{PL}{3}$

$= \frac{PL}{3}$

For $0 < x' < L/3$ $\quad M_{x'} = R_B x'$

$= Px'$

At $x' = L/3$, $\quad M_{x'=L/3} = \frac{PL}{3}$

Problem P3.3:

An overhanging beam carries two concentrated loads, each of P at the free ends shown in Figure P3.3. Write the equations of shear force and bending moment. Also dr the shear force and bending moment diagrams.

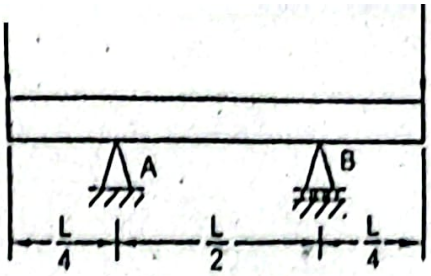

Figure P3.3

Given Data:

Length of beam $= L$

Each concentrated load $= P$

To Find:

Equations of shear force and bending moment

Shear force and bending moment diagrams

Solution:

Free body diagram of the entire beam is given in the figure below.

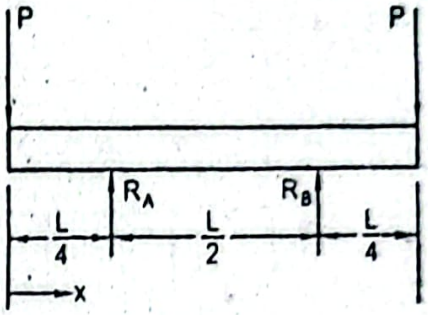

In static equilibrium condition,

$$+\uparrow \sum F_y = 0$$

$$\text{or, } R_A + R_B - 2P = 0$$

$$\text{or, } R_A + R_B = 2P$$

For the symmetric loading, $R_A = R_B = P$

To find the equations of shear force,

For $0 < x < L/4$ $\quad V_x = -P$

For $L/4 < x < 3L/4$ $\quad V_x = -P + R_A$

$$= -P + P = 0$$

For $3/4L < x < L$ $\quad V_x = -P + R_A + R_B$

$$= -P + P + P = P$$

To find the equations of bending moment,

For $0 < x < L/4$ $\quad M_x = -Px$

At $x = L/4$, $\quad M_{x=L/4} = -\dfrac{PL}{4}$

$$M_x = -Px + R_A\left(x - \frac{L}{4}\right)$$

For $L/4 < x < 3L/4$

$$M_x = -Px + P\left(x - \frac{L}{4}\right)$$

$$= -Px + Px - \frac{PL}{4}$$

$$= -\frac{PL}{4}$$

For $3L/4 < x < L$

$$M_x = -Px + R_A\left(x - \frac{L}{4}\right) + R_B\left(x - \frac{3L}{4}\right)$$

$$= -Px + P\left(x - \frac{L}{4}\right) + P\left(x - \frac{3L}{4}\right)$$

$$= -Px - PL$$

Shear force and bending moment diagrams are drawn as follows.

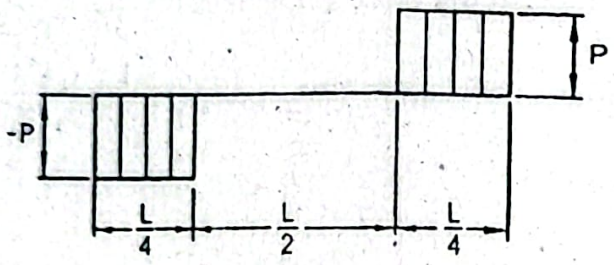

Shear force diagram

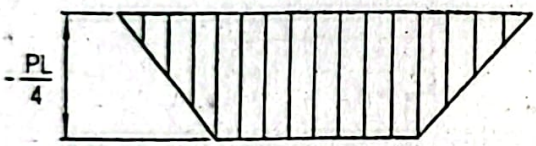

Bending moment diagram

Problem P3.4:

Determine the equations of shear force and bending moment for a simply supported with a uniformly distributed load of w throughout the entire span of L as shown in Figure P3.4. Draw also the shear force and bending moment diagrams.

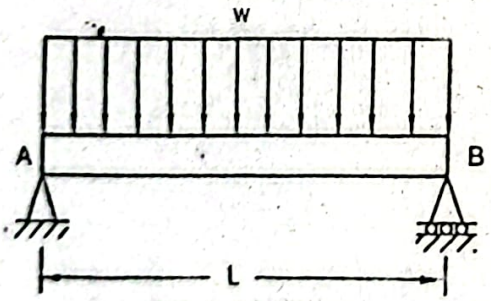

Figure P3.4

Given Data:

Span of beam = L

Distributed load = w

To Find:

- Equations of shear force and bending moment

. Shear force and bending moment diagrams

Solution:

Free body diagram of the entire beam is given below.

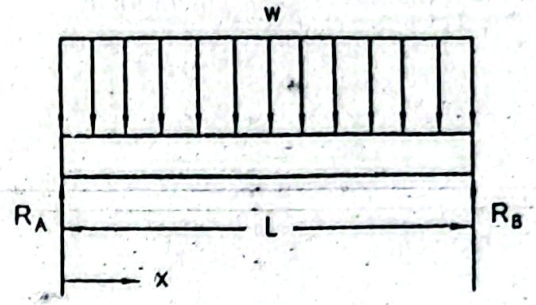

In static equilibrium condition,

$$+\uparrow \sum F_y = 0$$

$$\text{or, } R_A + R_B - wL = 0$$

$$\text{or, } R_A + R_B = wL$$

For the symmetric loading, $R_A = R_B = \frac{wL}{2}$

To obtain the equation of shear force,

For $0 < x < L$ $V_x = R_A - wx$

$$\text{or, } V_x = \frac{wL}{2} - wx$$

At $x = 0$, $V_{x=0} = \frac{wL}{2}$

At $x = L$, $V_{x=L} = -\frac{wL}{2}$

To find the location of zero shear,

$$\frac{wL}{2} - wx = 0$$

$$\text{or, } x = \frac{L}{2}$$

Free body diagram of a section of the beam is taken as follows.

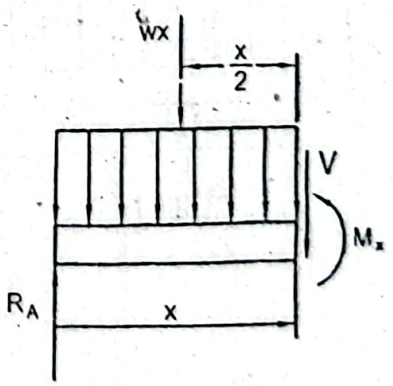

Bending moment,

For $0 < x < L$ $M_x = R_A x - wx\frac{x}{2}$

$$= \frac{wL}{2}x - \frac{wx^2}{2}$$

To find the location of maximum bending moment,

$$\frac{dM}{dx} = \frac{wL}{2} - wx = 0$$

$$\text{or, } x = \frac{L}{2}$$

Maximum bending moment, $M_{max} = \frac{wL}{2}\frac{L}{2} - \frac{w}{2}\frac{L^2}{4}$

$$= \frac{wL^2}{8}$$

Shear force and bending moment diagrams are drawn as follows.

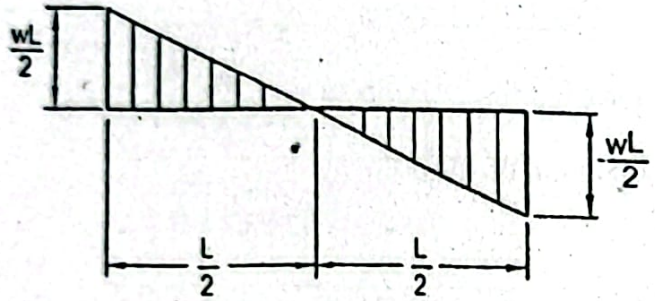

Shear force diagram

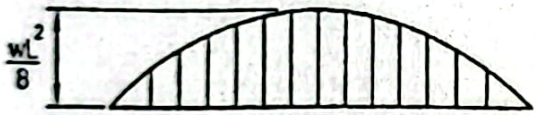

Bending moment diagram

Problem P3.5:

Write the equations of shear and bending moment for a cantilever beam with a uni. distributed load of w throughout the entire length of beam L as shown in Figure Draw also the shear force and bending moment diagrams.

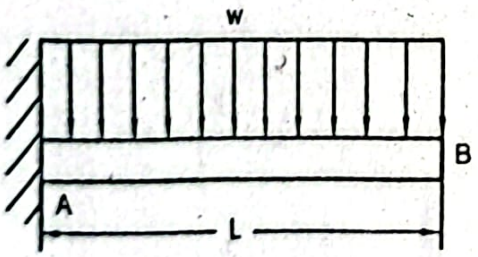

Figure P3.5

Given Data:

Length of beam = L

Distributed load = w

To Find:

- Equations of shear force and bending moment

Solution:

Free body diagram of the entire beam is shown below.

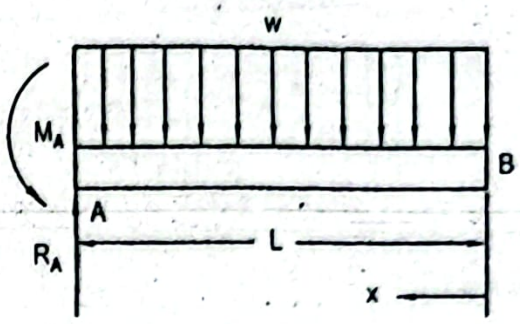

In static equilibrium condition,

$$+\uparrow \sum F_y = 0$$

$$\text{or, } R_A - wL = 0$$

$$\text{or, } R_A = wL$$

To find the equation of shear force,

For $0 < x < L$ $\qquad V_x = -wx$

At $x = L$, $\qquad V_{x=L} = -wL$

Shear force and bending moment diagrams are drawn as follows.

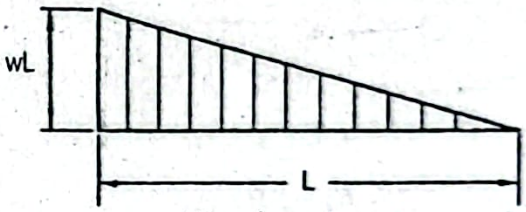

Shear force diagram

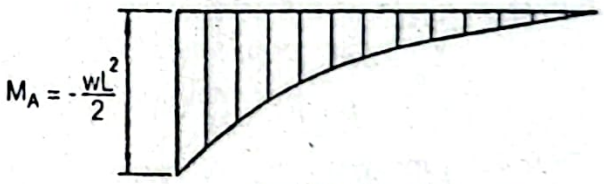

Bending moment diagram

Now to find the equation of bending moment,

For $0 < x < L$ $\qquad M_x = -wx\dfrac{x}{2}$

$$= -\frac{wx^2}{2}$$

At $x = L$, $\qquad M_x = -\dfrac{wL^2}{2}$

Problem P3.6:

Write the equations of shear force and bending moment for a cantilever beam subjected to two equal concentrated loads each of P, one at its free end and the other at the mid point as shown in Figure P3.6. Draw also the shear force and bending moment diagrams.

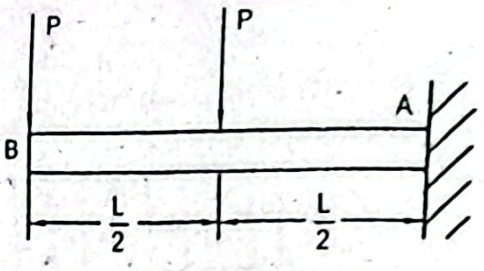

Figure P3.6

Given Data:

Length of beam = L

Each concentrated load = P

To Find:

- Equations of shear force and bending moment
- Shear force and bending moment diagrams

Solution:

Free body diagram of the entire beam is given below.

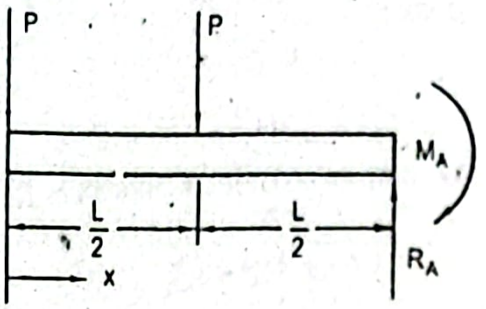

In static equilibrium condition,

$$+\uparrow \sum F_y = 0$$

$$\text{or, } R_A - 2P = 0$$

$$\text{or, } R_A = 2P$$

To find the equations of shear force,

For $0 < x < L/2$ $\quad V_x = -P$

For $L/2 < x < L$ $\quad V_x = -P - P = -2P$

To find the equations of bending moment,

For $0 < x < L/2$ $\quad M_x = -Px$

At $x = L/2$, $\quad M_{x=L/2} = -\dfrac{PL}{2}$

For $L/2 < x < L$ $\quad M_x = -Px - P(x - L/2)$

$$= -2Px + \frac{PL}{2}$$

At $x = L$, $\quad M_{x=L} = -2PL + \dfrac{PL}{2}$

$$= -\frac{3PL}{2}$$

Shear force and bending moment diagrams are drawn as follows.

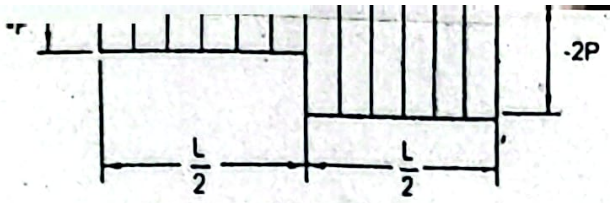

Shear force diagram

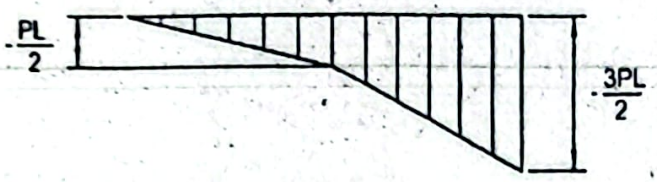

Bending moment diagram

Problem P3.7:

A cantilever beam carries a uniformly distributed load w over half of its length as shown in Figure P3.7. Write the equations of shear force and bending moment. Draw also the shear force and bending moment diagrams.

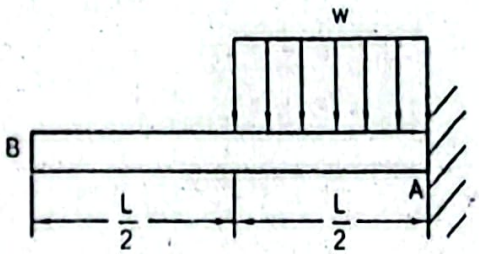

Figure P3.7

Given Data:

Length of beam $= L$

Distributed load $= w$

To Find:

- Equations of shear force and bending moment
- Shear force and bending moment diagrams

Solution:

Free body diagram of the entire beam is given below.

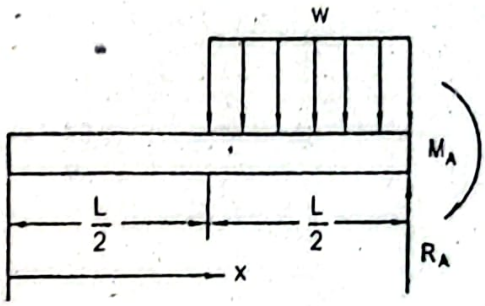

In static equilibrium condition,

$$+\uparrow \sum F_y = 0$$

$$\text{or, } R_A - \frac{wL}{2} = 0$$

$$\text{or, } R_A = \frac{wL}{2}$$

To find the equations of shear force,

For $0 < x < L/2$ $\qquad V_x = 0$

For $L/2 < x < L$ $\qquad V_x = -\left[w\left(x - \frac{L}{2}\right)\right]$

$$= -wx + \frac{wL}{2}$$

At $x = L/2$, $\qquad V_{x=L/2} = -\frac{wL}{2} + \frac{wL}{2} = 0$

At $x = L$, $\qquad V_{x=L} = -wL + \frac{wL}{2} = -\frac{wL}{2}$

Shear force and bending moment diagrams are drawn as follows.

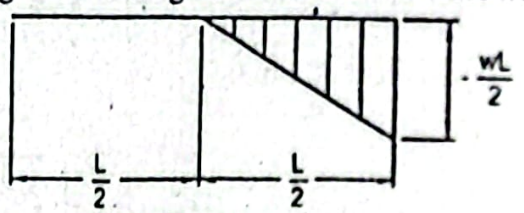

Shear force diagram

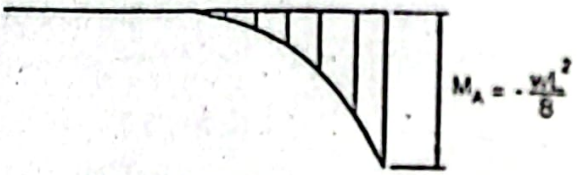

Bending moment diagram

Now to find the equations of bending moment,

For $0 < x < L/2$ $\qquad M_x = 0$

For $L/2 < x < L$ $\qquad M_x = -w\left(x - \frac{L}{2}\right)\frac{1}{2}\left(x - \frac{L}{2}\right)$

$$= -\frac{w}{2}\left(x - \frac{L}{2}\right)^2$$

$$= -\frac{wx^2}{2} + \frac{wLx}{2} - \frac{wL^2}{8}$$

At $x = L$, $\qquad M_{x=L} = -\frac{wL^2}{2} + \frac{wL^2}{2} - \frac{wL^2}{8}$

$$= -\frac{wL^2}{8}$$

Problem P3.8:

A cantilever beam supports a uniformly distributed load w over half of its length a concentrated load P at its free end as shown in Figure P3.8. Determine the equation shear force and bending moment. Draw also the shear force and bending mo diagrams.

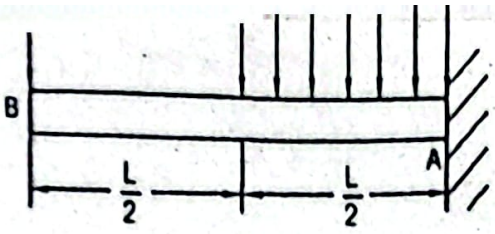

Figure P3.8

Given Data:

Length of beam = L

Concentrated load = P

Distributed load = w

To Find:

- Equations of shear force and bending moment
- Shear force and bending moment diagrams

Solution;

Free body diagram of the entire beam is shown below.

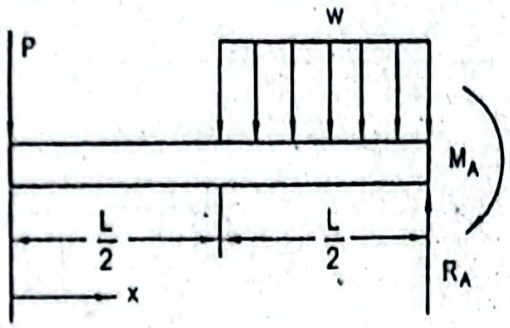

In static equilibrium condition,

$$+\uparrow \sum F_y = 0$$

$$R_A - P - \frac{wL}{2} = 0$$

$$\text{or, } R_A = P + \frac{wL}{2}$$

To find the equations of shear force,

For $0 < x < L/2$ $\qquad V_x = -P$

For $L/2 < x < L$ $\qquad V_x = -P - w\left(x - \frac{L}{2}\right)$

$$= -P - wx + \frac{wL}{2}$$

At $x = L$, $\qquad V_{x=L} = -P - wL + \frac{wL}{2} = -\left(P + \frac{wL}{2}\right)$

To find the equations of bending moment,

For $0 < x < L/2$ $\qquad M_x = -Px$

At $x = L/2$, $\qquad P_{x=L/2} = -\frac{PL}{2}$

For $L/2 < x < L$

$$M_x = -Px - w\left(x - \frac{L}{2}\right)\frac{1}{2}\left(x - \frac{L}{2}\right)$$

$$= -Px - \frac{w}{2}\left(x - \frac{L}{2}\right)^2$$

$$= -Px - \frac{wx^2}{2} + \frac{wLx}{2} - \frac{wL^2}{8}$$

At $x = L$,

$$M_{x=L} = -PL - \frac{wL^2}{2} + \frac{wL^2}{2} - \frac{wL^2}{8}$$

$$= -\left(PL + \frac{wL^2}{8}\right)$$

Shear force and bending moment diagrams are drawn as follows.

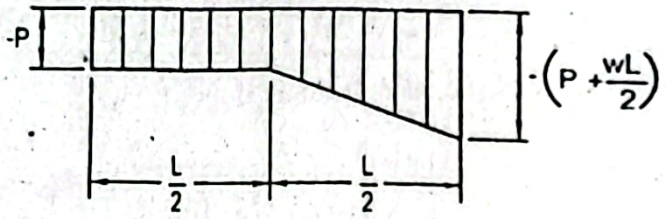

Shear force diagram

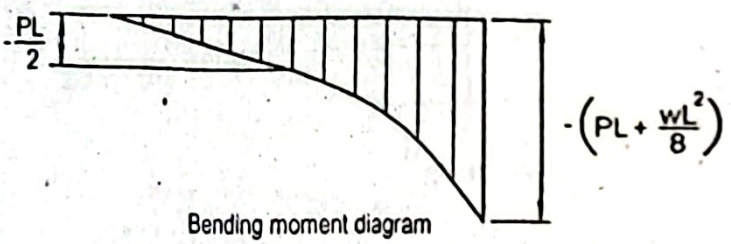

Bending moment diagram

Problem P3.9:

A cantilever beam supports a uniformly distributed load w over half of its len the free end as shown in Figure P3.9. Write the equations of shear force and moment. Draw also the shear force and bending moment diagrams.

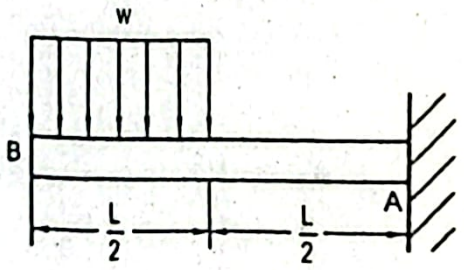

Figure P3.9

Given Data:

Length of beam = L

Distributed load = w

To Find:

- Equations of shear force and bending moment
- Shear force and bending moment diagrams

Solution:

Free body diagram of the entire beam is given in the figure below.

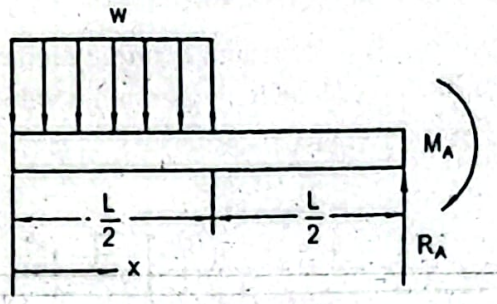

In static equilibrium condition,

$$+\uparrow \sum F_y = 0$$

$$\text{or, } R_A - \frac{wL}{2} = 0$$

$$\text{or, } R_A = \frac{wL}{2}$$

To find the equations of shear force,

For $0 < x < L/2$ $\qquad V_x = -wx$

At $x = \frac{L}{2}$, $\qquad V_{x=L/2} = -\frac{wL}{2}$

For $L/2 < x < L$ $\qquad V_x = -\frac{wL}{2}$

To find the equations of bending moment,

For $0 < x < L/2$ $\qquad M_x = -\frac{wx^2}{2}$

At $x = L/2$, $\qquad M_{x=L/2} = -\frac{wL^2}{8}$

For $L/2 < x < L$ $\qquad M_x = -\frac{wL}{2}\left(x - \frac{L}{4}\right) = -\frac{wLx}{2} + \frac{wL^2}{8}$

At $x = L$, $\qquad M_{x=L} = -\frac{wL^2}{2} + \frac{wL^2}{8} = -\frac{3wL^2}{8} = M_{max}$

Shear force and bending moment diagrams are drawn as follows.

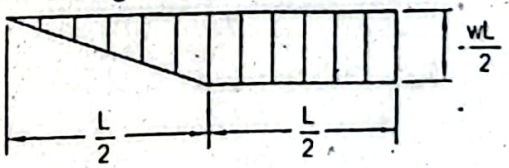

Shear force diagram

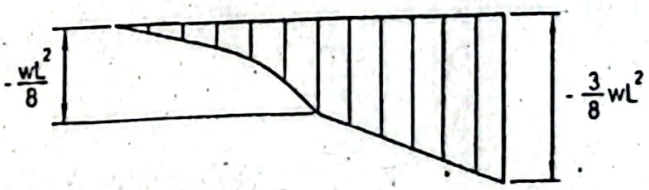

Bending moment diagram

Problem P3.10:

Write the equations of shear force and bending moment for a cantilever beam su to a triangular distribution of load with maximum value of w_o over half of its leng the free end as shown in Figure P3.10. Draw also the shear force and bending diagrams.

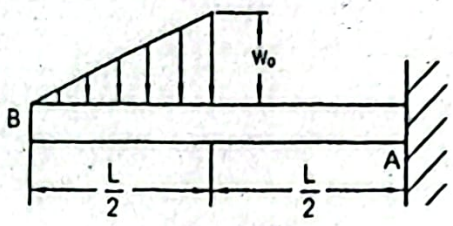

Figure P3.10

Given Data:

Length of beam = L

Load = Triangular distribution with maximum value of w_0

To Find:

- Equations of shear force and bending moment
- Shear force and bending moment diagrams

Solution:

Free body diagram of the entire beam is given below.

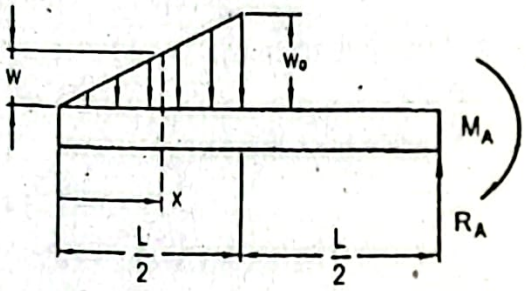

In static equilibrium condition,

$$+\uparrow \sum F_y = 0$$

$$\text{or, } R_A - \frac{w_0 L}{4} = 0$$

$$\text{or, } R_A = \frac{w_0 L}{4}$$

From the similar triangles, $\frac{w}{x} = \frac{w_0}{L/2}$

$$\text{or, } w = \frac{2w_0 x}{L}$$

To find the equations of shear force,

For $0 < x < L/2$ $\quad V_x = -\frac{wx}{2}$

$$= -\frac{w_0 x^2}{L} \quad \text{(Substituting the value of } w\text{)}$$

At $x = \frac{L}{2}$, $V_{x=L/2} = -\frac{w_0 L}{4}$

For $L/2 < x < L$ $V_x = -\frac{w_0 L}{4}$

Free body diagram of a section of the beam is considered as follows.

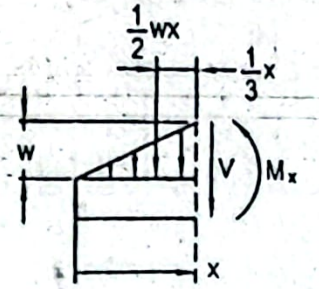

Bending moment,

For $0 < x < L/2$ $M_x = -\frac{wx}{2} \times \frac{1}{3} x$

$= -\frac{wx^2}{6}$

$= -\frac{w_0 x^3}{3L}$ (Substituting the value of w)

At $x = L/2$, $M_{x=L/2} = -\frac{w_0 L^2}{24}$

For $L/2 < x < L$ $M_x = -\frac{w_0 L}{2}\left(x - \frac{L}{3}\right)$

$= -\frac{w_0 Lx}{4} + \frac{w_0 L^2}{12}$

At $x = L$, $M_{x=L} = -\frac{w_0 L^2}{4} + \frac{w_0 L^2}{12} = -\frac{w_0 L^2}{6} = M_{max}$

Shear force and bending moment diagrams are drawn as follows.

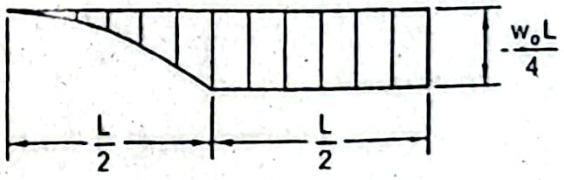

Shear force diagram

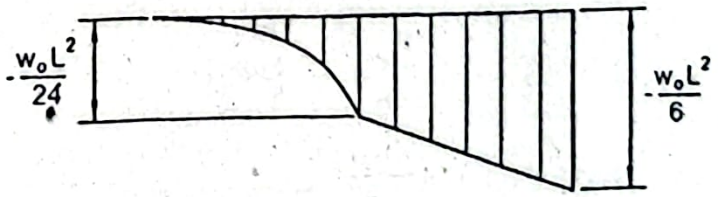

Bending moment diagram

Problem P3.11:

A simply supported beam of length L is subjected to a distributed load as sh Figure P3.11. Write the equations of shear force and bending moment. Draw a shear force and bending moment diagrams.

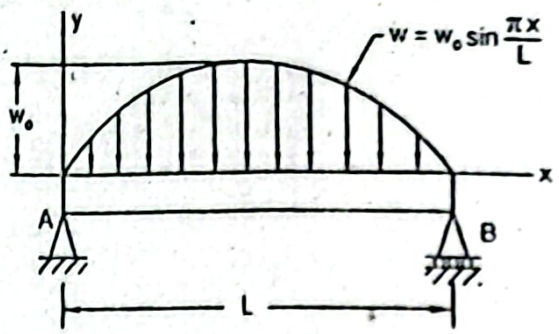

Figure P3.11

Given Data:

Length of beam = L

Distributed load = w

To Find:

- Equations of shear force and bending moment
- Shear force and bending moment diagrams

Solution:

Free body diagram of the entire beam is given below.

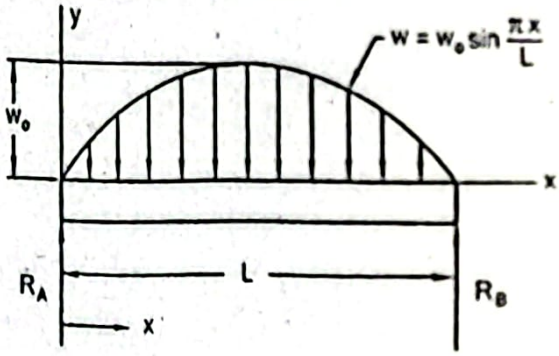

Total load,

$$W = \int_0^L w dx$$

$$= \int_0^L w_o \sin \frac{\pi x}{L} dx$$

$$= w_0 \int_0^L \sin \frac{\pi x}{L} dx$$

$$= \frac{w_0 L}{\pi} \left[-\cos \frac{\pi x}{L} \right]_0^L$$

$$= \frac{w_0 L}{\pi} [1 + 1]$$

$$= \frac{2 w_0 L}{\pi}$$

In static equilibrium condition,

$$\therefore \sum F_y = 0$$

$$R_A + R_B - W = 0$$

$$\text{or, } R_A + R_B = W = \frac{2w_0 L}{\pi}$$

For the symmetric loading, $R_A = R_B = \frac{w_0 L}{\pi}$

To determine the equation of shear force,

For $0 < x < L$

$$V_x = R_A - \int_0^x w dx$$

$$= \frac{w_0 L}{\pi} - w_0 \int_0^x \sin \frac{\pi x}{L} dx$$

$$= \frac{w_0 L}{\pi} - \frac{w_0 L}{\pi}\left[-\cos \frac{\pi x}{L}\right]_0^x$$

$$= \frac{w_0 L}{\pi} - \frac{w_0 L}{\pi}\left[-\cos \frac{\pi x}{L} + 1\right]$$

$$= \frac{w_0 L}{\pi} + \frac{w_0 L}{\pi} \cos \frac{\pi x}{L} - \frac{w_0 L}{\pi}$$

$$= \frac{w_0 L}{\pi} \cos \frac{\pi x}{L}$$

At $x = \frac{L}{2}$, $V_x = 0$

At $x = 0$, $V_{x=0} = \frac{w_0 L}{\pi}$

Now to find the equation of bending moment,

We have, $V = \frac{dM}{dx}$

$$\text{or, } dM = V_x dx$$

$$\text{or, } dM = \frac{w_0 L}{\pi} \cos \frac{\pi x}{L} dx$$

Therefore, for $0 < x < L$

$$M = \frac{w_0 L}{\pi} \int_0^x \cos \frac{\pi x}{L} dx$$

$$= w_0 \left(\frac{L}{\pi}\right)^2 \left[\sin \frac{\pi x}{L}\right]_0^x$$

$$= w_0 \left(\frac{L}{\pi}\right)^2 \sin \frac{\pi x}{L}$$

At $x = \frac{L}{2}$, $M_{max} = w_0 \left(\frac{L}{\pi}\right)^2$

Shear force and bending moment diagrams are drawn as follows.

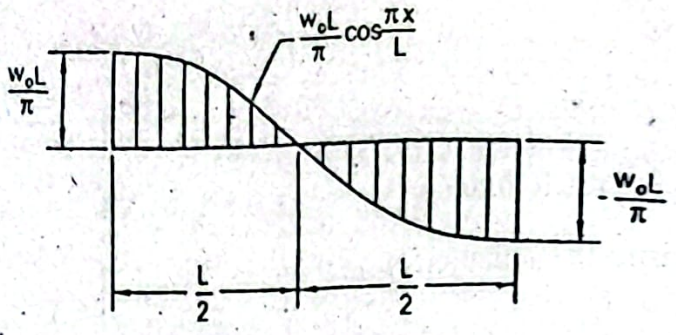

Shear force diagram

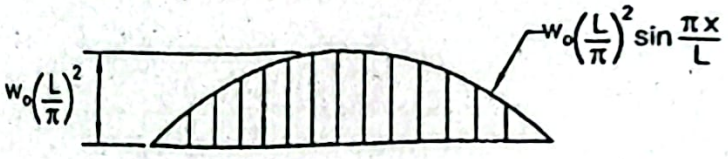

Bending moment diagram

Problem P3.12:

A simply supported beam of length L is subjected to a triangular distribution with maximum value of w_o as shown in Figure P3.12. Determine the equations force and bending moment. Draw also the shear force and bending moment diagra

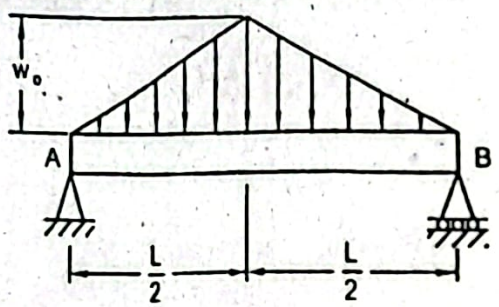

Figure P3.12

Given Data:

Length of beam = L

Load = triangular distribution with maximum value of w_o

To Find:

- Equations of shear force and bending moment
- Shear force and bending moment diagrams

Solution:

Free body diagram of the entire beam is given below.

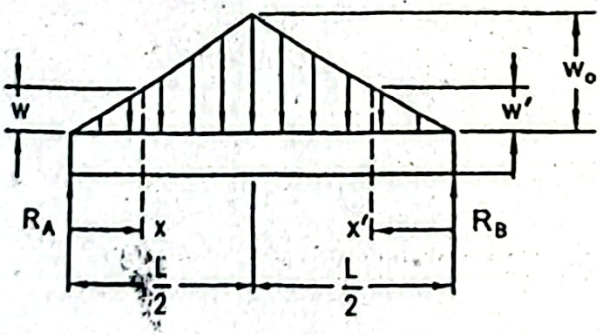

Total load, $$W = \left(\frac{1}{2} w_0 \frac{L}{2}\right) \times 2$$

$$= \frac{w_0 L}{2}$$

In static equilibrium condition,

$$+\uparrow \sum F_y = 0$$

$$R_A + R_B - W = 0$$

$$\text{or, } R_A + R_B = W = \frac{w_0 L}{2}$$

For the symmetric loading, $$R_A = R_B = \frac{w_0 L}{4}$$

To determine the equations of shear force,

$$V_x = R_A - \frac{1}{2} wx$$

From the similar triangles, $$\frac{W}{x} = \frac{w_0}{L/2}$$

$$\text{or, } W = 2w_0 \frac{x}{L}$$

Therefore, for $0 < x < L/2$ $$V_x = \frac{w_0 L}{4} - \frac{w_0 x^2}{L}$$

At $x = 0$, $$V_{x=0} = \frac{w_0 L}{4}$$

At $x = \frac{L}{2}$, $$V_{x=L/2} = 0$$

Similarly, for $0 < x' < L/2$ $$V_{x'} = -\frac{w_0 L}{4} + \frac{w_0 x'^2}{L}$$

At $x' = 0$, $$V_{x'=0} = -\frac{w_0 L}{4}$$

Now to find the equations of bending moment,

For $0 < x < L/2$ $$M_x = R_A x - \frac{1}{2} W x \frac{1}{3} x$$

$$= \frac{w_0 L x}{4} - \frac{1}{2} \frac{2 w_0 x^3}{L} \frac{1}{3}$$

$$= \frac{w_0 L x}{4} - \frac{w_0 x^3}{3L}$$

At $x = 0$, $$M_{x=0} = 0$$

At $x = \frac{L}{2}$, $$M_{x=L/2} = \frac{w_0 L^2}{8} - \frac{w_0 L^2}{24}$$

That is, $$M_{max} = \frac{w_0 L^2}{12}$$

Similarly, for $0 < x' < L/2$ $\quad M_{x'} = \frac{w_0 L x'}{4} - \frac{w_0}{3}\frac{x'}{L}$

Shear force and bending moment diagrams are drawn as follows.

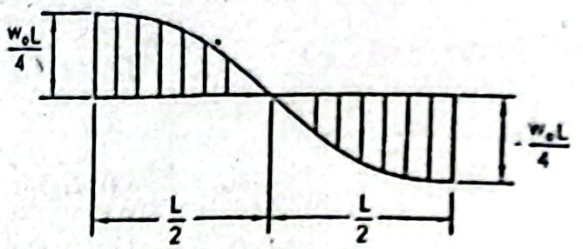

Shear force diagram

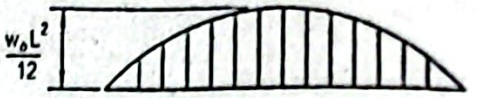

Bending moment diagram

Problem P3.13:

Determine the equations of shear force and bending moment for a cantilever bea triangular distribution of load as shown in Figure P3.13. Draw also the shear for bending moment diagrams.

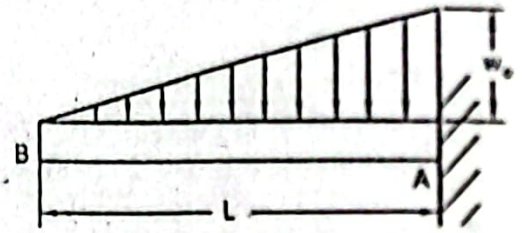

Figure P3.13

Given Data:

Length of beam = L

Load = Triangular distribution with maximum value of w_0

To Find:

- Equations of shear force and bending moment
- Shear force and bending moment diagrams

Solution:

Free body diagram of the entire beam is given below.

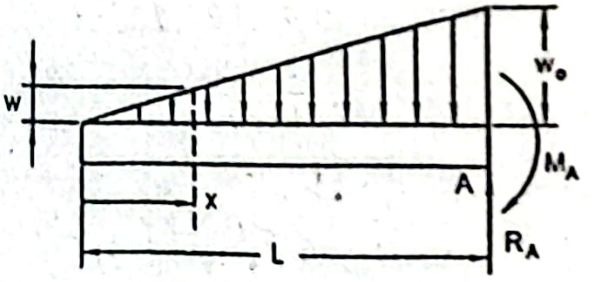

From the similar triangles, $\frac{w}{x} = \frac{w_0}{L}$

or, $w = \frac{x}{L} w_0$

To find the equation of shear force,

$$V_x = -\frac{wx}{2}$$

$$= -\frac{1}{2}\frac{w_0 x^2}{L} \quad \text{(Substituting the value of } w\text{)}$$

At $x = L$, $\quad V_{x=L} = -\frac{w_0 L}{2}$

To find the equation of bending moment,

$$M_x = -\frac{wx}{2} \times \frac{1}{3} x$$

$$= -\frac{wx^2}{6}$$

$$= -\frac{1}{6}\frac{w_0 x^3}{6L} \quad \text{(Substituting the value of } w\text{)}$$

At $x = L$, $\quad M_{max} = -\frac{w_0 L^2}{6}$

Shear force and bending moment diagrams are drawn as follows.

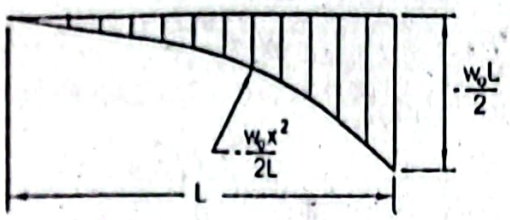

Shear force diagram

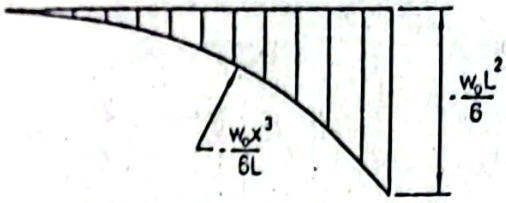

Bending moment diagram

Problem P3.14:

A simply supported beam is subjected to a triangular distribution of load with maximum value of w_o as shown in Figure P3.14. Write the equations of shear force and bending moment. Also draw the shear force and bending moment diagrams.

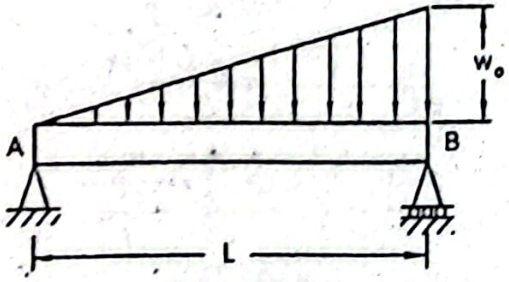

Figure P3.14

Given Data:
Length of beam = L
Load = triangular distribution with maximum value of w_0

To Find:
- Equations of shear force and bending moment
- Shear force and bending moment diagrams

Solution:
Free body diagram of the entire beam is shown below.

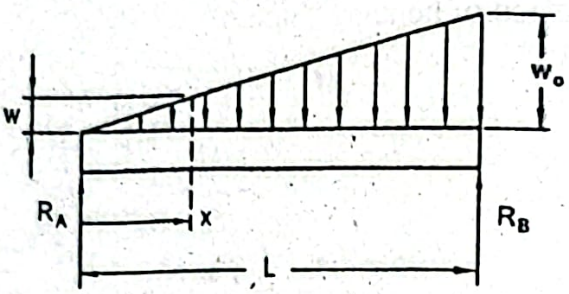

From the similar triangles, $\frac{w}{x} = \frac{w_0}{L}$

or, $w = \frac{x}{L} w_0$

Total load, $W = \frac{w_0 L}{2}$

In static equilibrium condition,

$$+\uparrow \sum F_y = 0$$

or, $R_A + R_B - W = 0$

or, $R_A + R_B = \frac{w_0 L}{2}$

Taking moment about A, $+\circlearrowleft \sum M_A = 0$

or, $R_B \times L - W \times \frac{2}{3} L = 0$

or, $R_B = \frac{2W}{3} = \frac{w_0 L}{3}$ (Substituting the value of

Therefore, $R_A = \frac{w_o L}{2} - R_B = \frac{w_o L}{2} - \frac{w_o L}{3} = \frac{w_o L}{6}$

To determine the equation of shear force,

$$V_x = R_A - \frac{wx}{2}$$

$$= \frac{w_0 L}{6} - \frac{wx}{2}$$

$$= \frac{w_0 L}{6} - \frac{w_0 x^2}{2L}$$

To find the location of zero shear, $V_x = 0 = \frac{w_0 L}{6} - \frac{w_0 x^2}{2L}$

or, $x = \frac{L}{\sqrt{3}}$

At $x = 0$, $V_{x=0} = \frac{w_0 L}{6}$

At $x = L$, $V_{x=L} = \frac{w_0 L}{6} - \frac{w_0 L}{2} = -\frac{w_0 L}{3}$

To find the equation of bending moment,

$$M_x = R_A x - \frac{1}{2} wx \times \frac{1}{3} x$$

$$= \frac{w_0 L x}{6} - \frac{w_0 x^3}{6L} \quad \text{(Substituting the value of } w\text{)}$$

At $x = \frac{L}{\sqrt{3}}$, $M_{x=L/\sqrt{3}} = \frac{w_0 L}{6} \frac{L}{\sqrt{3}} - \frac{w_0 L^2}{6 \times 3\sqrt{3}}$

$$= \frac{w_0 L^2}{6\sqrt{3}} - \frac{w_0 L^2}{18\sqrt{3}}$$

$$= \frac{w_0 L^2}{9\sqrt{3}} = M_{max}$$

Shear force and bending moment diagrams are drawn as follows.

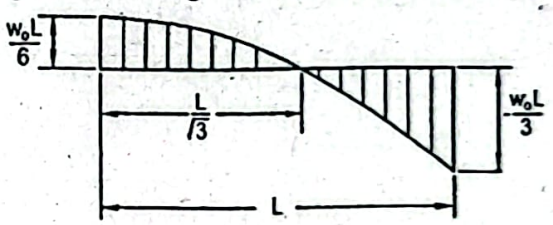

Shear force diagram

Bending moment diagram

Problem P3.15:

Determine the equations of shear force and bending moment of a simply supported beam carrying a triangular distribution of load over half of its length as shown in Figure P3.15. Draw also the shear force and bending moment diagrams.

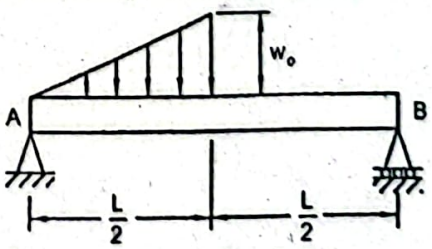

Figure P3.15

Given Data:

Length of beam $= L$

Load = triangular distribution with maximum value of w_0

To Find:

- Equations of shear force and bending moment
- Shear force and bending moment diagrams

Solution:

Free body diagram of the entire beam is given in the following figure.

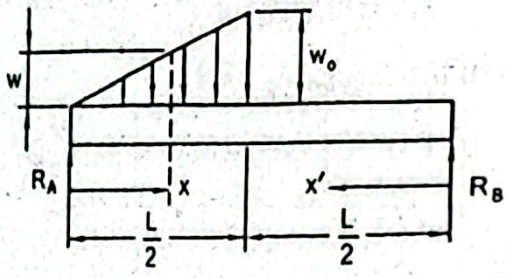

In static equilibrium condition,

$$+\uparrow \sum F_y = 0$$

$$\text{or, } R_A + R_B - \frac{1}{2} w_0 \frac{L}{2} = 0$$

$$\text{or, } R_A + R_B = \frac{w_0 L}{4}$$

Taking moment about A, $+\circlearrowleft \sum M_A = 0$

$$\text{or, } R_B \times L - \frac{w_0 L}{4} \times \frac{2}{3} \frac{L}{2} = 0$$

$$\text{or, } R_B = \frac{w_0 L}{12}$$

Therefore, $R_A = \frac{w_0 L}{4} - \frac{w_0 L}{12} = \frac{w_0 L}{6}$

To determine the equations of shear force,

$$V_x = R_A - \frac{wx}{2}$$

From the similar triangles, $\frac{w}{x} = \frac{w_0}{\frac{L}{2}}$

$$\text{or, } w = \frac{2 w_0 x}{L}$$

Therefore, for $0 < x < L/2$ $V_x = \frac{w_0 L}{6} - \frac{w_0 x^2}{L}$

At $x = 0$, $V_{x=0} = \frac{w_0 L}{6}$

At $x = L/2$, $V_{x=L/2} = \frac{w_0 L}{6} - \frac{w_0 L}{4} = -\frac{w_0 L}{12}$

To find the location of zero shear force,

$$V_x = 0 = \frac{w_0 L}{6} - \frac{w_0 x^2}{L}$$

$$\text{or, } x = \frac{L}{\sqrt{6}}$$

To find the equations of bending moment,

For $0 < x < L/2$

$$M_x = R_A x - \frac{1}{2} wx \times \frac{1}{3} x$$

$$= R_A x - \frac{wx^2}{6}$$

$$= \frac{w_0 Lx}{6} - \frac{w_0 x^3}{3L} \quad \text{(Substituting values of } w \text{ and } R_A\text{)}$$

At $x = \frac{L}{\sqrt{6}}$,

$$M_{x=L/\sqrt{6}} = \frac{w_0 L}{6}\frac{L}{\sqrt{6}} - \frac{w_0 L^2}{18\sqrt{6}} = \frac{w_0 L^2}{9\sqrt{6}}$$

At $x = \frac{L}{2}$,

$$M_{x=L/2} = \frac{w_0 L}{6}\frac{L}{2} - \frac{w_0 L^2}{24} = \frac{w_0 L^2}{24}$$

Bending moment, $M_{x'} = R_B x'$

Therefore, for $L/2 < x < L$ $M_x = R_B (L - x)$

$$= \frac{w_0 L}{12}(L - x)$$

At $x = \frac{L}{2}$,

$$M_{x=L/2} = \frac{w_0 L}{12}\left(L - \frac{L}{2}\right) = \frac{w_0 L^2}{24}$$

Shear force and bending moment diagrams are drawn as follows.

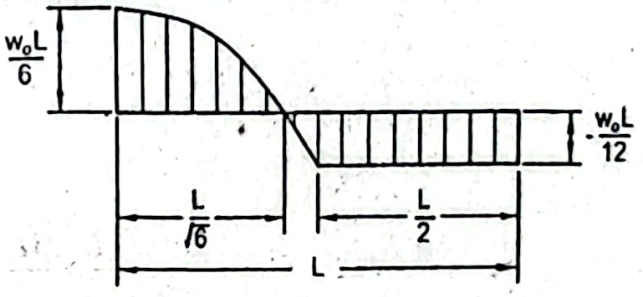

Shear force diagram

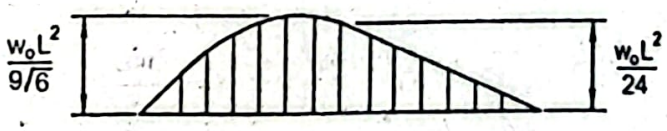

Bending moment diagram

roblem P3.16:

/rite the equations of shear force and bending moment for a simply supported beam ıbjected to a uniformly distributed load of $2w$ over half of its length and w over the st half of its length as shown in Figure P3.16. Draw also the shear force and bending oment diagrams.

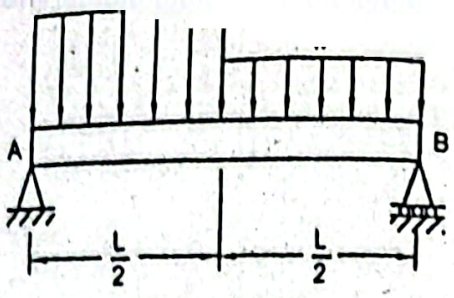

Figure P3.16

Given Data:

Length of beam = L

Distributed load = w

To Find:

- Equations of shear force and bending moment
- Shear force and bending moment diagrams

Solution:

Free body diagram of the entire beam is shown below.

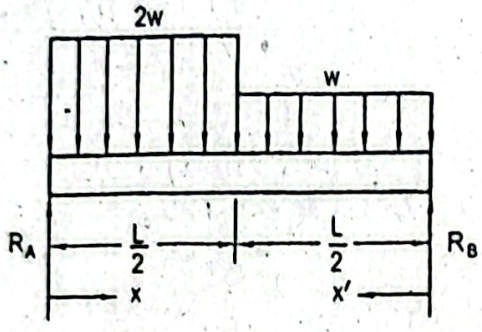

In static equilibrium condition,

$$+\uparrow \sum F_y = 0$$

$$\text{or, } R_A + R_B - 2w \times \frac{L}{2} - \frac{w \times L}{2} = 0$$

$$\text{or, } R_A + R_B = \frac{3wL}{2}$$

Taking moment about A, $+\circlearrowleft \sum M_A = 0$

$$\text{or, } R_B \times L - \frac{2wL}{2} \times \frac{L}{4} - \frac{w \times L}{2} \times \frac{3L}{4} = 0$$

$$\text{or, } R_B = \frac{5wL}{8}$$

Therefore, $$R_A = \frac{3wL}{2} - \frac{5wL}{8} = \frac{7wL}{8}$$

To determine the equations of shear force,

For $0 < x < L/2$ $$V_x = R_A - 2wx$$

$$= \frac{7}{8}wL - 2wx$$

At $x = 0$, $$V_{x=0} = \frac{7}{8}wL$$

At $x = L/2$,

$$V_{x=L/2} = \frac{7wL}{8} - \frac{2wL}{2} = -\frac{wL}{8}$$

To find the location of zero shear, $V_x = 0 = \frac{7wL}{8} - 2wx$

or, $x = \frac{7}{16}L$

For $L/2 < x < L$

$$V_x = R_A - \frac{2w \times L}{2} - w\left(x - \frac{L}{2}\right)$$

$$= \frac{7}{8}wL - wL - w\left(x - \frac{L}{2}\right)$$

$$= -wx + \frac{3}{8}wL$$

At $x = L$,

$$V_{x=L} = -wL + \frac{3}{8}wL = -\frac{5}{8}wL$$

To find the equations of bending moment,

For $0 < x < L/2$

$$M_x = R_A x - \frac{2wx^2}{2}$$

$$= \frac{7wL}{8}x - wx^2$$

At $x = \frac{7}{16}L$,

$$M_{x=7L/16} = \frac{7wL}{8} \times \left(\frac{7}{16}L\right) - w\left(\frac{7L}{16}\right)^2 = \frac{49}{256}wL^2$$

At $x = \frac{L}{2}$,

$$M_{x=L/2} = \frac{7}{8}wL\left(\frac{L}{2}\right) - w\left(\frac{L}{2}\right)^2 = \frac{3wL^2}{16}$$

For $0 < x' < L/2$

$$M_{x'} = R_B x' - \frac{wx'^2}{2} = \frac{5}{8}wLx' - \frac{wx'^2}{2}$$

At $x' = \frac{L}{2}$,

$$M_{x'=L/2} = \frac{5}{8}wL\left(\frac{L}{2}\right) - \frac{w}{2}\left(\frac{L}{2}\right)^2 = \frac{3}{16}wL^2$$

Shear force and bending moment diagrams are drawn as follows.

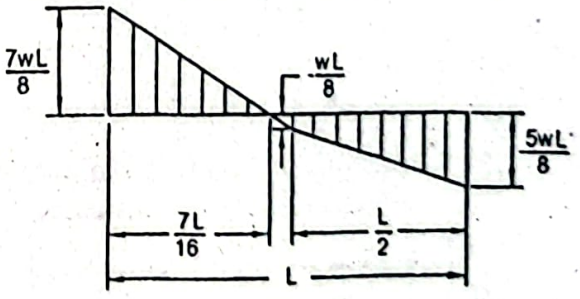

Shear force diagram

Bending moment diagram

Problem P3.17:

A cantilever beam is loaded by a couple M at its free end as shown in Figu
Write the equations of shear force and bending moment. Draw also the shear
bending moment diagrams.

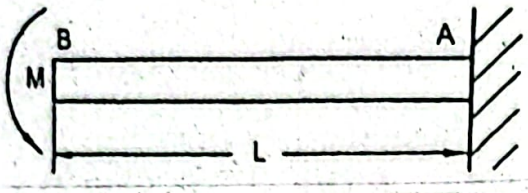

Figure P3.17

Given Data:

Length of beam = L

Couple = M

To Find:

- Equations of shear force and bending moment
- Shear force and bending moment diagrams

Solution:

Free body diagram of the entire beam is given below.

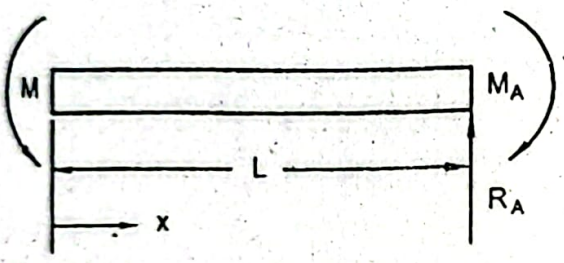

In static equilibrium condition,

$$+\uparrow \sum F_y = 0$$

or, $R_A = 0$

Taking moment about B, $+\circlearrowleft \sum M_B = 0$

or, $M - M_A = 0$

or, $M_A = M$

To find the equation of shear force,

For $0 < x < L$ $\quad V_x = 0$

To find the equation of bending moment,

For $0 < x < L$ $\quad M_x = -M$

Shear force and bending moment diagrams are drawn as follows.

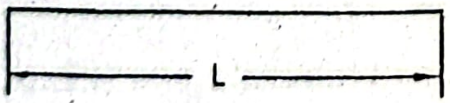

Shear force diagram

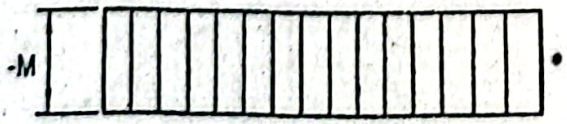

Bending moment diagram

Problem P3.18:
Write the equations of shear force and bending moment for a cantilever beam subjected to a couple M at its free end and a uniformly distributed load w over half of its length as shown in Figure P3.18. Draw also the shear force and bending moment diagrams.

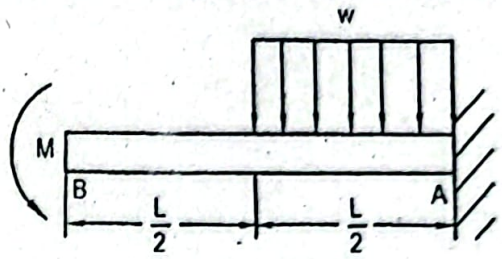

Figure P3.18

Given Data:
Length of beam $= L$
Distributed load $= w$
Couple $= M$

To Find:
- Equations of shear force and bending moment
- Shear force and bending moment diagrams

Solution:
Free body diagram of the entire beam is shown below.

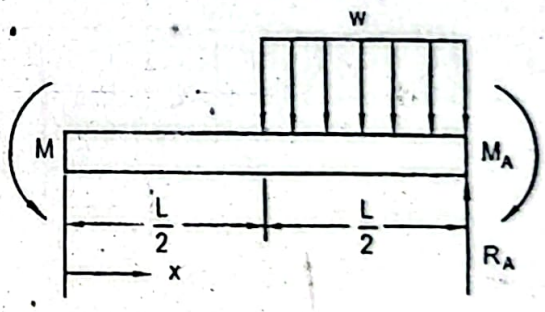

In static equilibrium condition,

$$+\uparrow \sum F_y = 0$$

$$\text{or, } R_A - \frac{wL}{2} = 0$$

$$\text{or, } R_A = \frac{wL}{2}$$

To find the equations of shear force,

For $0 < x < L/2$ $\qquad V_x = 0$

For $L/2 < x < L$ $\qquad V_x = -w\left(x - \frac{L}{2}\right)$

$$= -wx + \frac{wL}{2}$$

At $x = L$, $\qquad V_{x=L} = -wL + \frac{wL}{2} = -\frac{wL}{2}$

To find the equations of bending moment,

For $0 < x < L/2$ $\quad M_x = -M$

$$M_x = -M - w\left(x - \frac{L}{2}\right)\frac{1}{2}\left(x - \frac{L}{2}\right)$$

$$= -M - \frac{w}{2}\left(x - \frac{L}{2}\right)^2$$

At $x = L$, $\quad M_{x=L} = -M - \frac{w}{2}\left(L - \frac{L}{2}\right)^2$

$$= -M - \frac{wL^2}{8}$$

$$= -\left(M + \frac{wL^2}{8}\right)$$

Shear force and bending moment diagrams are drawn as follows.

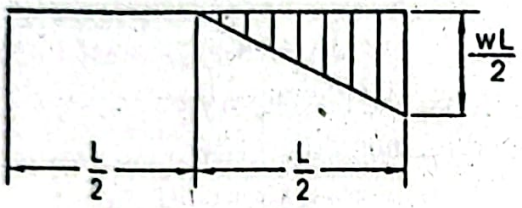

Shear force diagram

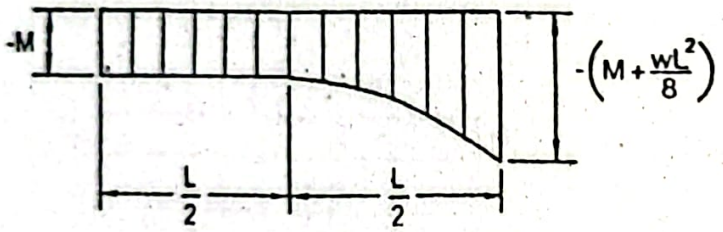

Bending moment diagram

Problem P3.19:

Write the equations of shear force and bending moment for a cantilever beam c triangular distribution of load as shown in Figure P3.19. Draw also the shear bending moment diagrams.

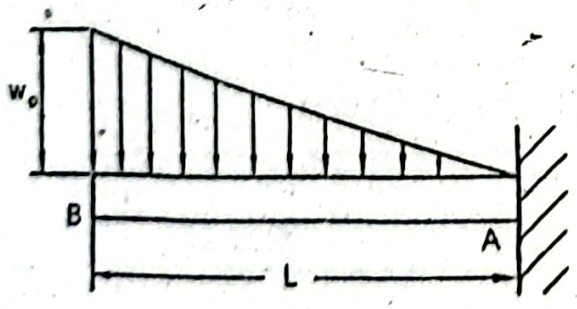

Figure P3.19

Given Data:

Length of beam = L

Load = triangular distribution with maximum value of w_0

To Find:

- Equations of shear force and bending moment
- Shear force and bending moment diagrams

Solution:

Free body diagram of the entire beam is shown below.

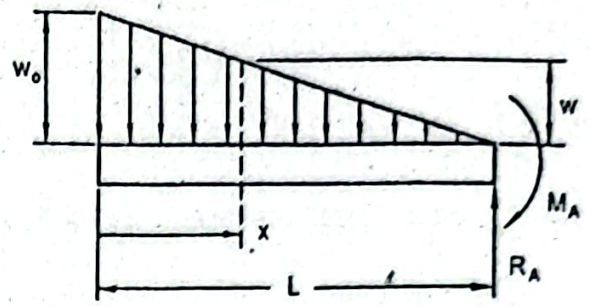

From the similar triangles, $\frac{w}{L-x} = \frac{w_0}{L}$

or, $w = \frac{L-x}{L} w_0$

In static equilibrium condition,

$$+\uparrow \sum F_y = 0$$

or, $R_A - \frac{w_0 L}{2} = 0$

or, $R_A = \frac{w_0 L}{2}$

Taking moment about A,

$$+\circlearrowleft \sum M_A = 0$$

or, $\frac{w_0 L}{2} \frac{2}{3} L - M_A = 0$

or, $M_A = \frac{w_0 L^2}{3}$

To determine the equation of shear force,

$$V_x = -\left[\frac{w_0 L}{2} - \frac{w(L-x)}{2}\right]$$

$$= -\left[\frac{w_0 L}{2} - \frac{w_0 (L-x)^2}{2L}\right]$$ (Substituting the value of w)

At $x = L$, $V_{x=L} = -\frac{w_0 L}{2}$

To find the equation of bending moment,

$$M_x = R_A (L-x) - \frac{w(L-x)}{2} \frac{(L-x)}{3} - M_A$$

$$= \frac{w_0 L}{2}(L-x) - \frac{w(L-x)^2}{6} - \frac{w_0 L^2}{3}$$

$$= \frac{w_0 L}{2}(L-x) - \frac{w(L-x)^3}{6L} - \frac{w_0 L^2}{3}$$

$$= \frac{w_0 L^2}{2} - \frac{w_0 Lx}{2} - \frac{w_0 L^2}{6} + \frac{w_0 Lx}{2} - \frac{w_0 x^2}{2} + \frac{w x^3}{6L} - \frac{w_0}{3}$$

$$= \left(\frac{w_0 x^3}{6L} - \frac{w_0 x^2}{2}\right)$$

At $x = L$, $\quad M_{x=L} = \frac{w_0 L^2}{6} - \frac{w_0 L^2}{2} = -\frac{1}{3} w_0 L^2 = M_{max}$

Shear force and bending moment diagrams are drawn as follows.

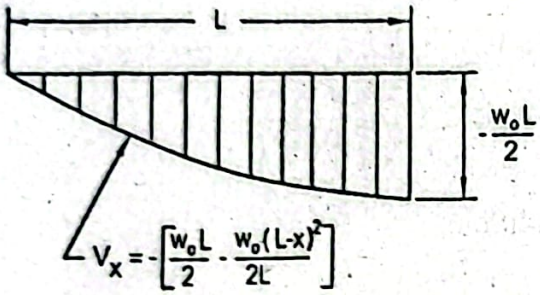

Shear force diagram

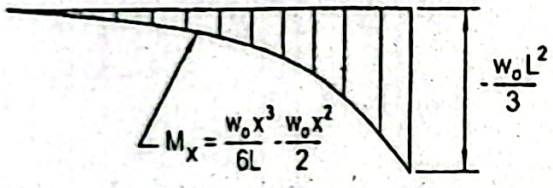

Bending moment diagram

Problem P3.20:

Write the equations of shear force and bending moment for a cantilever beam carryin distributed load which follows cosine curve as shown in Figure P3.20. Draw also shear force and bending moment diagrams.

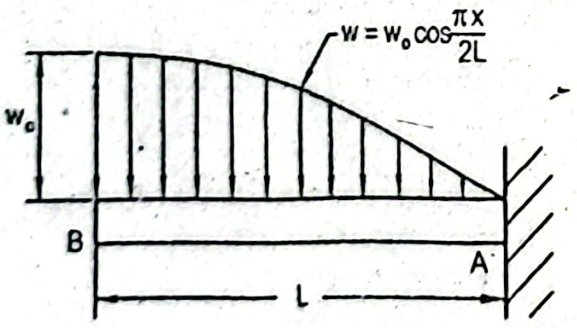

Figure P3.20

Given Data:

Length of beam = L

Load = Distributed load of cosine shape with maximum value of w_0

To Find:

- Equations of shear force and bending moment
- Shear force and bending moment diagrams

Solution:

Free body diagram of the entire beam is given in the figure below.

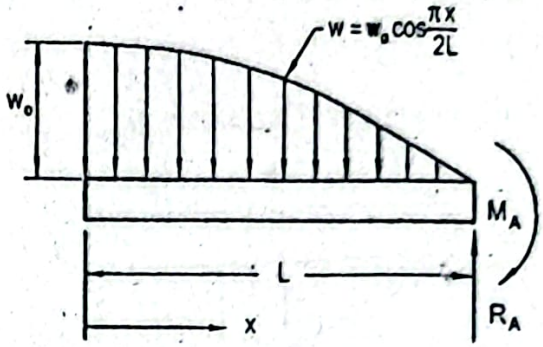

If W is the total weight, then, $W = \int_0^L w dx$

$$= w_0 \int_0^L \cos\frac{\pi x}{2L} dx$$

$$= \frac{2w_0 L}{\pi}\left[\sin\frac{\pi x}{2L}\right]_0^L$$

$$= \frac{2w_0 L}{\pi}$$

In static equilibrium condition,

$$+\uparrow \sum F_y = 0$$

$$\text{or, } R_A - W = 0$$

$$\text{or, } R_A = \frac{2w_0 L}{\pi}$$

To determine the equation of shear force,

For $0 < x < L$ $\quad V_x = -\int_0^x w dx$

$$= -w_0 \int_0^x \cos\frac{\pi x}{2L} dx$$

$$= -\frac{2w_0 L}{\pi}\left[\sin\frac{\pi x}{2L}\right]_0^x$$

$$= -\frac{2w_0 L}{\pi}\sin\frac{\pi x}{2L}$$

At $x = L$, $\quad V_{x=L} = -\frac{2w_0 L}{\pi}$

To find the equation of bending moment we have,

$$V_x = \frac{dM}{dx}$$

$$\text{or, } dM = V_x dx$$

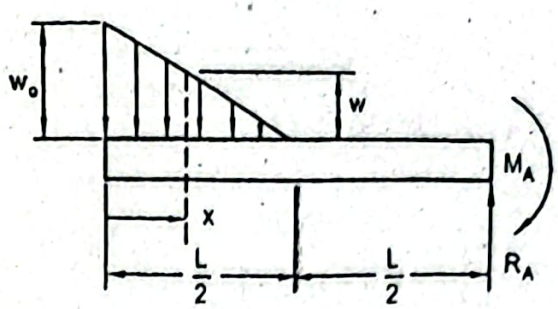

In static equilibrium condition,

$$+\uparrow \sum F_y = 0$$

$$\text{or, } R_A - \frac{w_0 L}{4} = 0$$

$$\text{or, } R_A = \frac{w_0 L}{4}$$

Taking moment about A, $+\circlearrowleft \sum M_A = 0$

$$\frac{w_0 L}{2}\frac{1}{2}\times\left(\frac{L}{2}+\frac{2}{3}\frac{L}{2}\right) - M_A = 0$$

$$\text{or, } M_A = \frac{5}{24} w_0 L^2$$

From the similar triangles, $\frac{w}{\left(\frac{L}{2}-x\right)} = \frac{w_0}{\frac{L}{2}}$

$$\text{or, } w = \frac{2w_0}{L}\left(\frac{L}{2}-x\right)$$

To determine the equation of shear force,

For $L/2 < x < L$ $\quad V_x = -R_A - \frac{w_0 L}{4}$

For $0 < x < L/2$ $\quad V_x = -R_A + \frac{1}{2} w \left(\frac{L}{2}-x\right)$

$$= -\frac{w_0 L}{4} + \frac{1}{2}\frac{2w_0}{L}\left(\frac{L}{2}-x\right)\left(\frac{L}{2}-x\right) \quad \text{(Putting value of } w\text{)}$$

$$= -\frac{w_0 L}{4} + \frac{w_0}{L}\left(\frac{L}{2}-x\right)^2$$

At $x = L/2$, $\quad V_{x=L/2} = -\frac{w_0 L}{4}$

To find the equations of bending moment,

For $0 < x < L/2$ $\quad M_x = R_A(L-x) - \frac{w}{2}\left(\frac{L}{2}-x\right)\frac{1}{3}\left(\frac{L}{2}-x\right) - M_A$

$$= \frac{w_0 L}{2}(L-x) - \frac{2w_0}{2L}\frac{1}{3}\left(\frac{L}{2}-x\right)^3 - \frac{5w_0 L^2}{24}$$

or, $M = -$ ...uting value

$$= -\frac{4w_0L^2}{\pi^2}\left[-\cos\frac{\pi x}{2L}\right]_0^x$$

$$= -\frac{4w_0L^2}{\pi^2}\left[1-\cos\frac{\pi x}{2L}\right]$$

At $x = L$, $\quad M_{x=L} = -\frac{4w_0L^2}{\pi^2}$

Shear force and bending moment diagrams are drawn as follows.

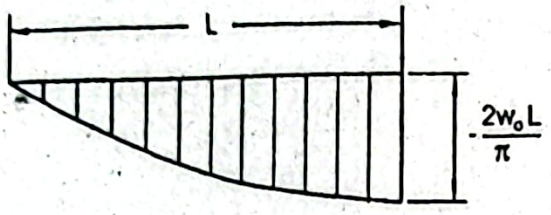

Shear force diagram

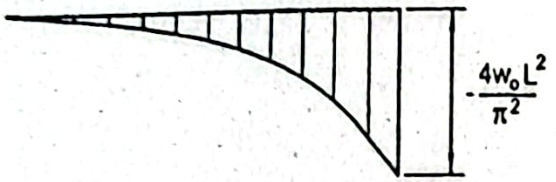

Bending moment diagram

Problem P3.21:

Write the equations of shear force and bending moment for a cantilever beam carry triangular distribution of load over half of its length from the free end as shown in F P3.21. Draw also the shear force and bending moment diagrams.

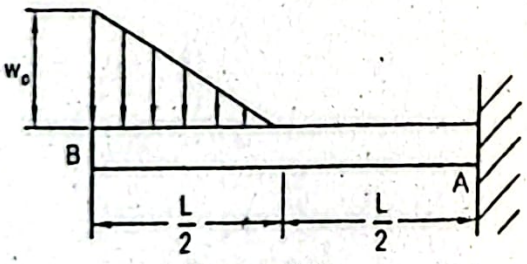

Figure P3.21

Given Data:

Length of beam = L

Load = Triangular distribution with maximum value of w_0

To Find:

- Equations of shear force and bending moment
- Shear force and bending moment diagrams

Solution:

Free body diagram of the entire beam is shown below.

$$= \left[\frac{w_0 x}{3L} \cdot \frac{w_0 x}{2} \right]$$

At $x = L/2$, $\quad M_{x=L/2} = \frac{w_0 L^3}{24} - \frac{w_0 L^2}{8} = -\frac{w_0 L^2}{12}$

For $L/2 < x < L$ $\quad M_x = R_A (L - x) - M_A$

$$= \frac{w_0 L}{4}(L - x) - \frac{5}{24} w_0 L^2$$

At $x = L$, $\quad M_{x=L} = -\frac{5}{24} w_0 L^2$

Shear force and bending moment diagrams are drawn as follows.

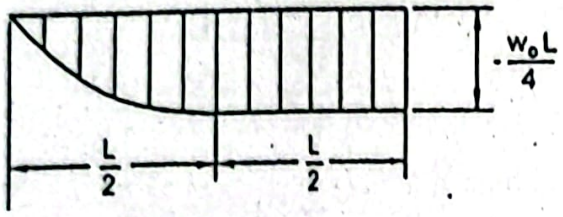

Shear force diagram

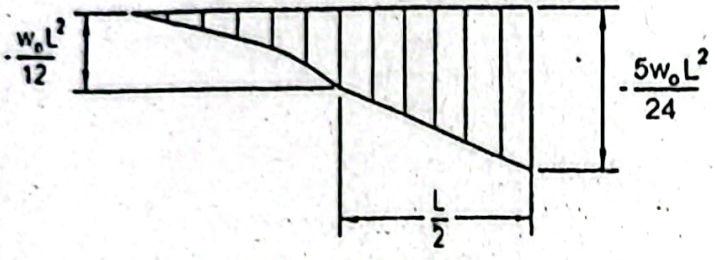

Bending moment diagram

Problem P3.22:

A simply supported beam is subjected to two couples M and $2M$ at its ends as shown Figure P3.22. Write the equations of shear force and bending moment. Draw also shear force and bending moment diagrams.

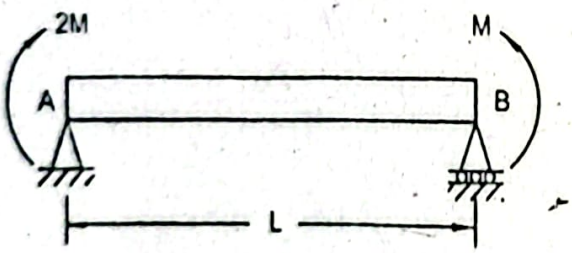

Figure P3.22

Given Data:

Length of beam = L

Couples = $2M$ and M

To Find:

- Equations of shear force and bending moment
- Shear force and bending moment diagrams

Solution:

Free body diagram of the entire beam is given below.

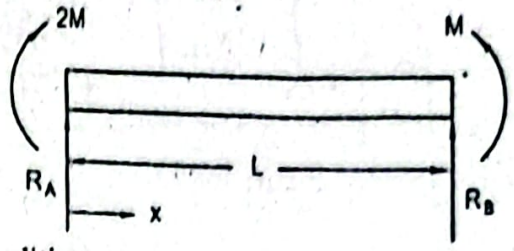

In static equilibrium condition,

$$+\circlearrowleft \sum M_A = 0$$

or, $R_B \times L + M - 2M = 0$

or, $R_B = \frac{M}{L}$

$$+\uparrow \sum F_y = 0$$

or, $R_A + R_B = 0$

or, $R_A = -R_B = -\frac{M}{L}$

To find the equation of shear force,

For $0 < x < L$ $\qquad V_x = R_A = -\frac{M}{L}$

To find the equation of bending moment,

For $0 < x < L$ $\qquad M_x = R_A x + 2M$

$$= -\frac{M}{L}x + 2M$$

At $x = 0$, $\qquad M_{x=0} = 2M$

At $x = L$, $\qquad M_{x=L} = -\frac{ML}{L} + 2M = M$

Shear force and bending moment diagrams are drawn as follows.

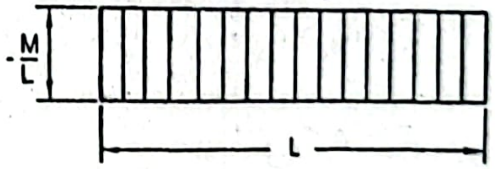

Shear force diagram

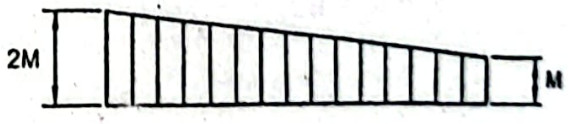

Bending moment diagram

roblem P3.23:

etermine the equations of shear force and bending moment for a simply supported beam rrying uniformly distributed loads w placed symmetrically at both ends as shown in gure P3.23. Draw also the shear force and bending moment diagrams.

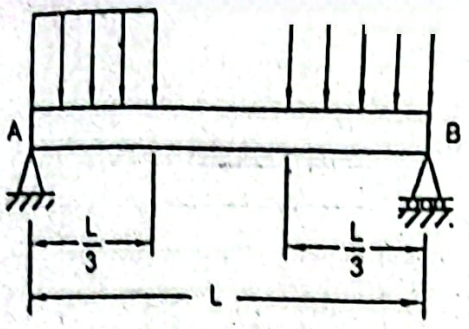

Figure P3.23

Given Data:

Length of beam = L

Each distributed load = w

To Find:

- Equations of shear force and bending moment
- Shear force and bending moment diagrams

Solution:

Free body diagram of the entire beam is shown below.

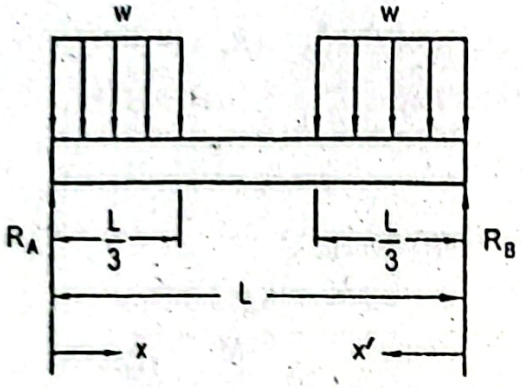

In static equilibrium condition,

$$+\uparrow \sum F_y = 0$$

$$\text{or, } R_A + R_B - \left(\frac{wL}{3} + \frac{wL}{3}\right) = 0$$

$$\text{or, } R_A + R_B = \frac{2wL}{3}$$

For the symmetric loading, $R_A = R_B = \frac{wL}{3}$

To determine the equations of shear force,

For $0 < x < L/3$ $\quad V_x = R_A - wx$

$$= \frac{1}{3}wL - wx$$

At $x = 0$, $\quad V_{x=0} = \frac{1}{3}wL$

At $x = L/3$, $\quad V_{x=L/3} = \frac{wL}{3} - \frac{wL}{3} = 0$

For $L/3 < x < 2L/3$

$$V_x = R_A - \frac{wL}{3}$$

$$= \frac{wL}{3} - \frac{wL}{3} = 0$$

For $0 < x' < L/3$

$$V_{x'} = -\left(R_B - wx'\right)$$

$$= -\frac{wL}{3} + wx'$$

At $x' = 0$,

$$V_{x'=0} = -\frac{wL}{3}$$

At $x' = L/3$,

$$V_{x'=L/3} = -\frac{wL}{3} + \frac{wL}{3} = 0$$

To find the equations of bending moment,

For $0 < x < L/3$

$$M_x = R_A x - \frac{wx^2}{2} = \frac{1}{3}wLx - \frac{wx^2}{2}$$

At $x = \frac{L}{3}$,

$$M_{x=L/3} = \frac{wL^2}{9} - \frac{wL^2}{18} = \frac{1}{18}wL^2 = M_{max}$$

For $L/3 < x < 2L/3$

$$M_x = R_A x - \frac{wL}{3}\left(x - \frac{L}{6}\right)$$

$$= \frac{1}{3}wLx - \frac{1}{3}wLx + \frac{wL^2}{18}$$

$$= \frac{wL^2}{18}$$

For $0 < x' < L/3$

$$M_{x'} = R_B x' - \frac{wx'^2}{2} = \frac{1}{3}wLx' - \frac{wx'^2}{2}$$

At $x' = \frac{L}{3}$,

$$M_{x'=L/3} = \frac{wL^2}{9} - \frac{wL^2}{18} = \frac{1}{18}wL^2$$

Shear force and bending moment diagrams are drawn as follows.

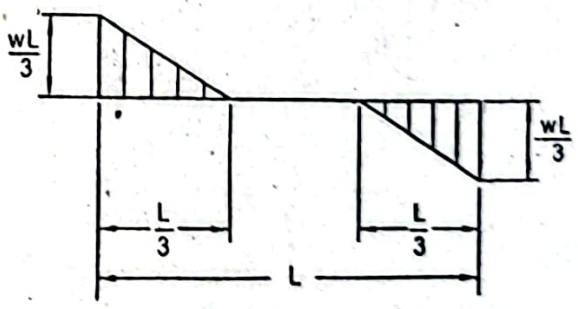

Shear force diagram

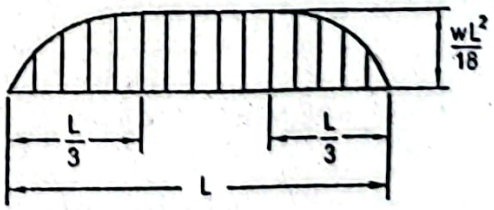

Bending moment diagram

Problem P3.24:

Determine the equations of shear force and bending moment for a simply supported carrying a uniformly distributed load placed symmetrically at the middle as shown Figure P3.24. Draw also the shear force and bending moment diagrams.

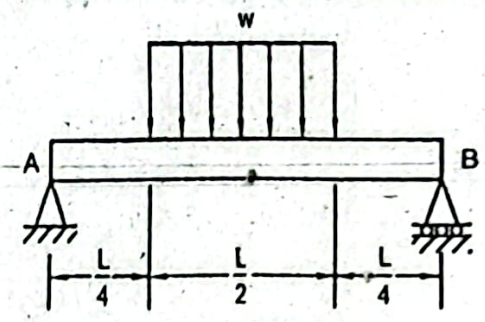

Figure P3.24

Given Data:

Length of beam = L

Distributed load = w

To Find:

- Equations of shear force and bending moment
- Shear force and bending moment diagrams

Solution:

Free body diagram of the entire beam is given in the figure below.

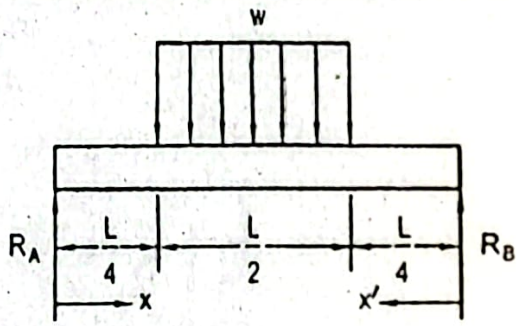

In static equilibrium condition,

$$+\uparrow \sum F_y = 0$$

$$\text{or, } R_A + R_B - \frac{wL}{2} = 0$$

$$\text{or, } R_A + R_B = \frac{wL}{2}$$

For the symmetric loading, $R_A = R_B = \frac{wL}{4}$

To determine the equations of shear force,

For $0 < x < L/4$ $\quad V_x = R_A = \frac{wL}{4}$

For $L/4 < x < 3L/4$ $\quad V_x = R_A - w\left(x - \frac{L}{4}\right)$

$$= \frac{wL}{4} - wx + \frac{wL}{4} = \frac{wL}{2} - wx$$

To find the location of zero shear,

$$V_x = 0 = \frac{wL}{2} - wx$$

or, $x = \frac{L}{2}$

For $0 < x' < L/4$ $\quad V_{x'} = -R_B = -\frac{wL}{4}$

To find the equations of bending moment,

For $0 < x < L/4$ $\quad M_x = R_A x$

$$= \frac{wLx}{4}$$

At $x = \frac{L}{4}$, $\quad M_{x=L/4} = \frac{wL^2}{16}$

For $L/4 < x < 3L/4$ $\quad M_x = R_A x - \frac{w}{2}\left(x - \frac{L}{4}\right)^2$

$$= \frac{1}{4}wLx - \frac{wx^2}{2} + \frac{wLx}{4} - \frac{wL^2}{32}$$

$$= -\frac{wx^2}{2} + \frac{wLx}{2} - \frac{wL^2}{32}$$

At $x = \frac{L}{2}$, $\quad M_{x=L/2} = -\frac{wL^2}{8} + \frac{wL^2}{4} - \frac{wL^2}{32} = \frac{3}{32}wL^2$

For $0 < x' < L/4$ $\quad M_{x'} = R_B x'$

$$= \frac{wLx'}{4}$$

Shear force and bending moment diagrams are drawn as follows.

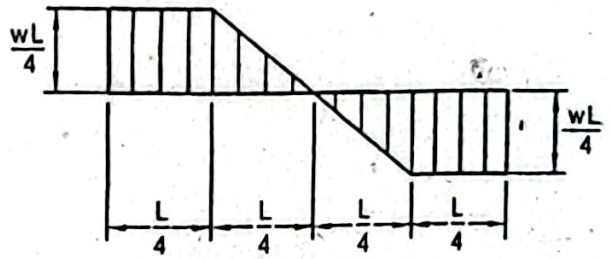

Shear force diagram

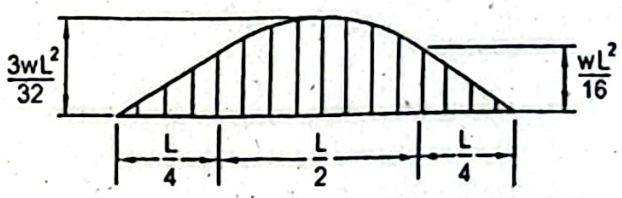

Bending moment diagram

Problem P3.25:

Write the equations of shear force and bending moment for an overhanging carrying three concentrated loads each of P as shown in Figure P3.25. Draw shear force and bending moment diagrams.

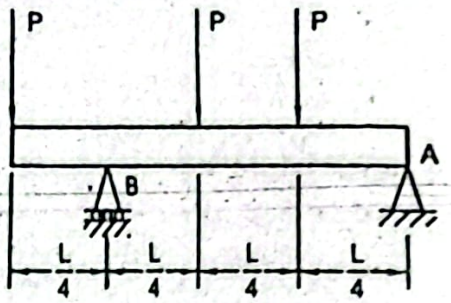

Figure P3.25

Given Data:

Length of beam $= L$

Each concentrated load $= P$

To Find:

- Equations of shear force and bending moment
- Shear force and bending moment diagrams

Solution:

Free body diagram of the entire beam is shown below.

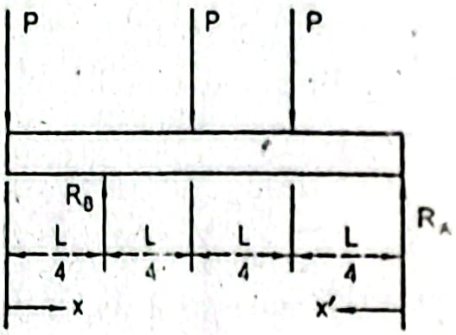

In static equilibrium condition,

$$+\uparrow \sum F_y = 0$$

$$\text{or, } R_A + R_B - 3P = 0$$

$$\text{or, } R_A + R_B = 3P$$

Taking moment about A, $+\circlearrowleft \sum M_A = 0$

$$\text{or, } P \times L - R_B \times \frac{3L}{4} + \frac{P \times L}{2} + \frac{PL}{4} = 0$$

$$\text{or, } R_B = \frac{7P}{3}$$

Therefore, $$R_A = 3P - R_B = 3P - \frac{7}{3}P = \frac{2}{3}P$$

To determine the equations of shear force,

For $0 < x < L/4$ $\quad V_x = -P$

For $L/4 < x < L/2$ $\quad V_x = -P + R_{B_x} = -P + \frac{7}{3}P = \frac{4}{3}P$

For $L/2 < x < 3L/4$ $\quad V_x = -P + R_B - P = -2P + \frac{7}{3}P = \frac{1}{3}P$

For $3L/4 < x < L$ $\quad V_x = -P + R_B - P - P = -3P + \frac{7}{3}P = -\frac{2}{3}P$

To find the equations of bending moment,

For $0 < x < L/4$ $\quad M_x = -Px$

At $x = L/4$, $\quad M_{x=L/4} = -\frac{PL}{4}$

For $L/4 < x < L/2$ $\quad M_x = -Px + R_B\left(x - \frac{L}{4}\right)$

$$= -Px + \frac{7}{3}P\left(x - \frac{L}{4}\right)$$

$$= \frac{4}{3}Px - \frac{7PL}{12}$$

Shear force and bending moment diagrams are drawn as follows.

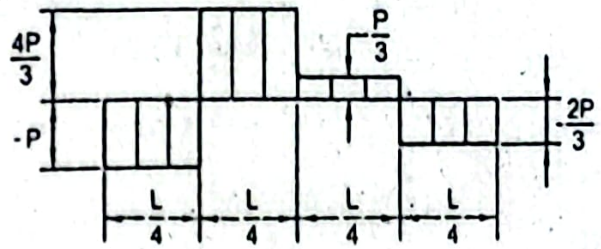

Shear force diagram

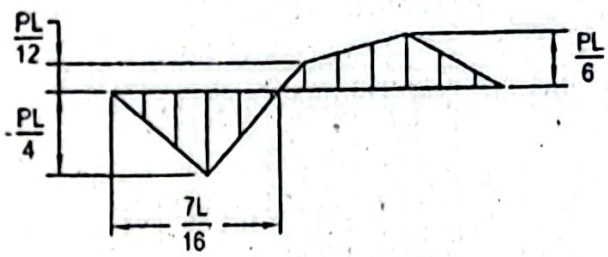

Bending moment diagram

Now to find the location of zero bending moment (inflection point),

$$M_x = 0 = \frac{4}{3}Px - \frac{7PL}{12}$$

or, $x = \frac{7}{16}L$

At $x = \frac{L}{2}$, $\quad M_{x=L/2} = \frac{4}{3}P\left(\frac{L}{2}\right) - \frac{7PL}{12} = \frac{PL}{12}$

$$M_x = -Px + R_B\left(x - \frac{L}{4}\right) - P\left(x - \frac{L}{2}\right)$$

$$= -Px + \frac{7}{3}P\left(x - \frac{L}{4}\right) - P\left(x - \frac{L}{2}\right)$$

$$= \frac{1}{3}Px - \frac{PL}{12}$$

At $x=\frac{3}{4}L$, $M_{x=3L/4}=\frac{P}{3}\frac{3}{4}L-\frac{PL}{12}=\frac{Pl}{6}$

For $\frac{3}{4}L<x<L$ $M_x=R_A x'$

$=\frac{2}{3}P(L-x)$

Problem P3.26:

A cantilever beam carries a distributed load as shown in Figure P3.26. Det equations of shear force and bending moment. Draw also the shear force an moment diagrams.

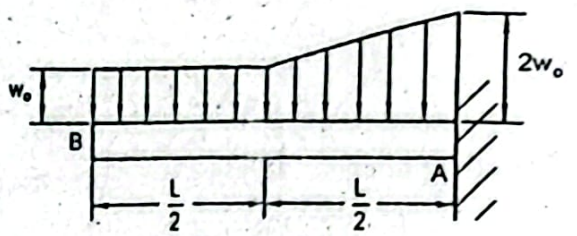

Figure P3.26

Given Data:

Length of beam = L

Load = Distributed

To Find:

- Equations of shear force and bending moment
- Shear force and bending moment diagrams

Solution:

Free body diagram of the entire beam is shown below.

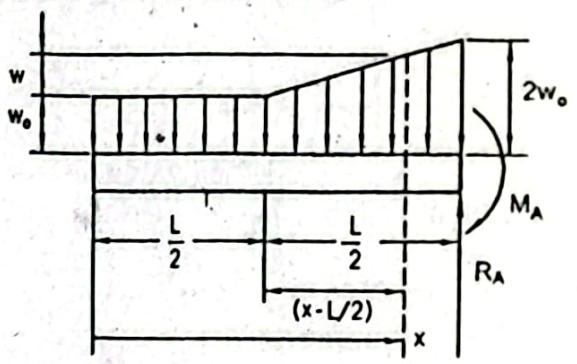

To determine the equations of shear force,

For $0<x<L/2$ $V_x=-w_0 x$

At $x=L/2$, $V_{x=L/2}=-\frac{w_0 L}{2}$

For $L/2<x<L$ $V_x=-w_0 x-\frac{1}{2}w\left(x-\frac{L}{2}\right)$

We have from the similar triangles, $\frac{w}{x-L/2}=\frac{w_0}{L/2}$

or, $w = \frac{2w_0}{L}\left(x - \frac{L}{2}\right)$

Substituting the value of w, $V_x = -w_0 x - \frac{w_0}{L}\left(x - \frac{L}{2}\right)^2$

At $x = L$, $V_{x=L} = -w_0 L - \frac{w_0 L}{4} = -\frac{5w_0 L}{4}$.

To find the equations of bending moment,

For $0 < x < L/2$ $M_x = -\frac{w_0 x^2}{2}$

At $x = L/2$, $M_{x=L/2} = -\frac{w_0 L^2}{8}$

For $L/2 < x < L$ $M_x = -\frac{w_0 x^2}{2} - \frac{1}{2} w \left(x - \frac{L}{2}\right)\frac{1}{3}\left(x - \frac{L}{2}\right)$

$= \frac{w_0 x^2}{2} - \frac{w_0}{3L}\left(x - \frac{L}{2}\right)^3$

At $x = L$, $M_{x=L} = -\frac{w_0 L^2}{2} - \frac{w_0 L^2}{24}$

$= -\frac{13 w_0 L^2}{24}$

Shear force and bending moment diagrams are drawn as follows.

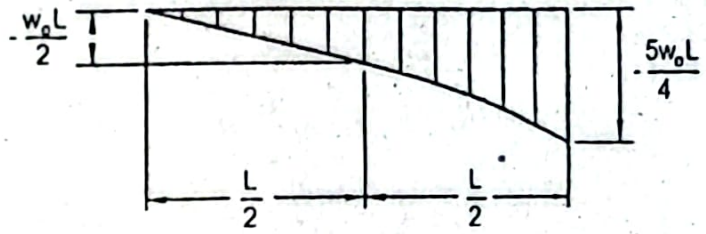

Shear force diagram

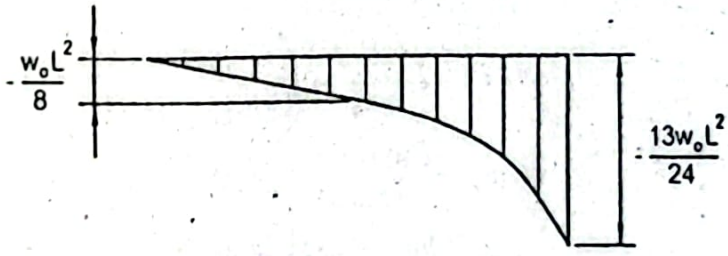

Bending moment diagram

Problem P3.27:

A simply supported beam carries a triangular distribution of load with maximum value of w_0 which is placed symmetrically at the middle of the beam as shown in Figure P3.27. Write the equations of shear force and bending moment. Draw also the shear force and bending moment diagrams.

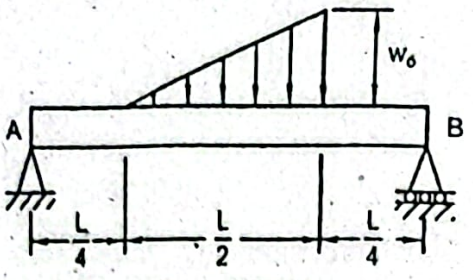

Figure P3.27

Given Data:

Length of beam $= L$

Load = Triangular distribution with maximum value of w_o

To Find:

- Equations of shear force and bending moment
- Shear force and bending moment diagrams

Solution:

Free body diagram of the entire beam is given below.

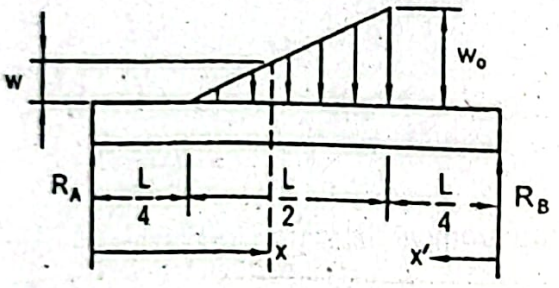

In static equilibrium condition,

$$+\uparrow \sum F_y = 0$$

$$\text{or, } R_A + R_B - \frac{1}{2} w_0 \frac{L}{2} = 0$$

$$\text{or, } R_A + R_B = \frac{w_0 L}{4}$$

Taking moment about A, $+\circlearrowleft \sum M_A = 0$

$$\text{or, } R_B \times L - \frac{w_0 L}{4} \times \left(\frac{L}{4} + \frac{2}{3}\frac{L}{2} \right) = 0$$

$$\text{or, } R_B = \frac{7 w_0 L}{48}$$

Therefore, $$R_A = \frac{w_0 L}{4} - R_B = \frac{w_0 L}{4} - \frac{7 w_0 L}{48} = \frac{5 w_0 L}{48}$$

To determine the equations of shear force,

For $0 < x < L/4$ $$V_x = R_A = \frac{5 w_0 L}{48}$$

For $L/4 < x < 3L/4$ $$V_x = R_A - \frac{1}{2} w \left(x - \frac{L}{4} \right)$$

$$= \frac{5w_0L}{48} - \frac{w}{2}\left(x - \frac{L}{4}\right)$$

We have from the similar triangles, $\frac{w}{\left(x - \frac{L}{4}\right)} = \frac{w_0}{\frac{L}{2}}$

$$\text{or, } w = \frac{2w_0}{L}\left(x - \frac{L}{4}\right)$$

Substituting the value of w, $V_x = \frac{5w_0L}{48} - \frac{w_0}{L}\left(x - \frac{L}{4}\right)^2$

To find the location of zero shear, $V_x = 0 = \frac{5w_0L}{48} - \frac{w_0}{L}\left(x - \frac{L}{4}\right)^2$

$$\text{or, } x = 0.573L$$

For $0 < x' < L/4$ $\quad V_{x'} = -R_B = -\frac{7w_0L}{48}$

Shear force and bending moment diagrams are drawn as follows.

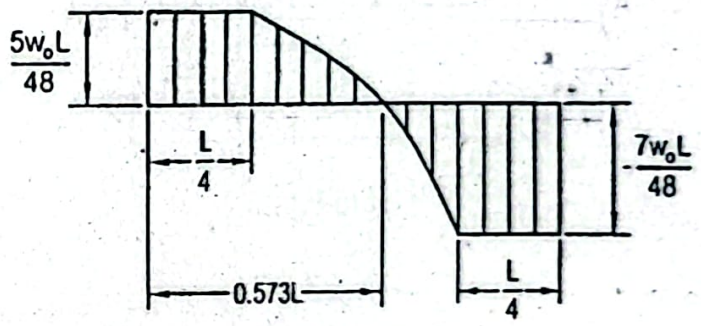

Shear force diagram

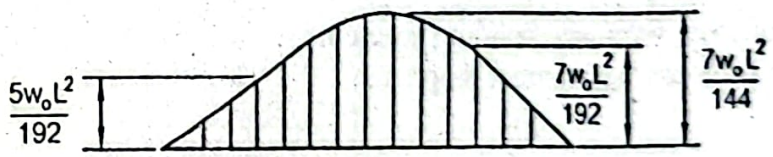

Bending moment diagram

To find the equations of bending moment,

For $0 < x < L/4$ $\quad M_x = R_A x = \frac{5w_0L}{48}x$

At $x = L/4$, $\quad M_{x=L/4} = \frac{5w_0L^2}{192}$

For $L/4 < x < 3L/4$ $\quad M_x = R_A x - \frac{w}{2}\left(x - \frac{L}{4}\right)\frac{1}{3}\left(x - \frac{L}{4}\right)$

$$= \frac{5w_0L}{48}x - \frac{w}{6}\left(x - \frac{L}{4}\right)^2$$

Now substituting the value of w, $M_x = \frac{5w_0L}{48}x - \frac{w_0}{3L}\left(x - \frac{L}{4}\right)^3$

At $x = 0.573L$,

$$M_{x=0.573L} = \frac{5w_0L}{48} \times 0.573L - \frac{w_0}{3L}\left(0.573L - \frac{L}{4}\right)^3$$

$$= 0.0485w_0L^2$$

For $0 < x' < L/4$

$$M_{x'} = R_B x'$$

$$= \frac{7w_0L}{48} x'$$

At $x' = L/4$,

$$M_{x'=L/4} = \frac{7w_0L^2}{192}$$

Problem P3.28:

A simply supported beam carries a distributed load over its entire length as show Figure P3.28. Write the equations of shear force and bending moment. Draw also shear force and bending moment diagrams.

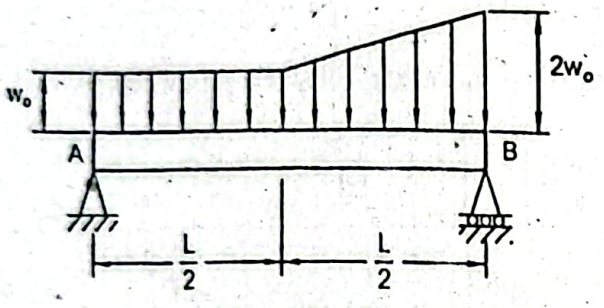

Figure P3.28

Given Data:

Length of beam = L

Load = Distributed

To Find:

- Equations of shear force and bending moment
- Shear force and bending moment diagrams

Solution:

Free body diagram of the entire beam is given below.

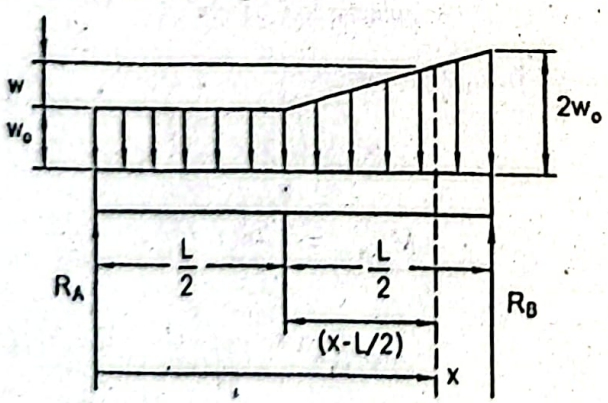

In static equilibrium condition,

$$+\uparrow \sum F_y = 0$$

$$\text{or, } R_A + R_B - w_0L - \frac{1}{2} \times w_0 \times \frac{L}{2} = 0$$

$$\text{or, } R_A + R_B = w_0 L + \frac{w_0 L}{4} = \frac{5}{4} w_0 L$$

Taking moment about A, $+\circlearrowleft \sum M_A = 0$

$$\text{or, } R_B \times L - w_o \times L \times \frac{L}{2} - \frac{1}{2} w_o \times \frac{L}{2} \times \left(\frac{L}{2} + \frac{2}{3}\frac{L}{2} \right) = 0$$

$$\text{or, } R_B \times L = \frac{w_0 L^2}{2} + \frac{5}{24} w_0 L^2$$

$$\text{or, } R_B = \frac{w_0 L}{2} + \frac{5 w_0 L}{24} = \frac{17 w_0 L}{24}$$

Therefore, $$R_A = \frac{5 w_0 L}{4} - R_B = \frac{5 w_0 L}{4} - \frac{17 w_0 L}{24} = \frac{13 w_0 L}{24}$$

To determine the equations of shear force,

For $0 < x < L/2$ $$V_x = R_A - w_0 x$$

$$= \frac{13 w_0 L}{24} - w_0 x$$

At $x = 0$, $$V_x = \frac{13 w_0 L}{24}$$

At $x = L/2$, $$V_{x=L/2} = \frac{13 w_0 L}{24} - \frac{w_0 L}{2} = \frac{w_0 L}{24}$$

For $L/2 < x < L$ $$V_x = R_A - w_0 x - \frac{1}{2} w \left(x - \frac{L}{2} \right)$$

From the similar triangles, $$\frac{w}{x - \frac{L}{2}} = \frac{w_0}{\frac{L}{2}}$$

$$\text{or, } w = \frac{2 w_0}{L} \left(x - \frac{L}{2} \right)$$

Substituting the values of w and R_A,

$$V_x = \frac{13 w_0 L}{24} - w_0 x - \frac{w_0}{L} \left(x - \frac{L}{2} \right)^2$$

For $L/2 < x < L$ $$V_x = -\frac{w_0 x^2}{2} + \frac{7}{24} w_0 L$$

At $x = L$, $$V_{x=L} = -w_0 L + \frac{7}{24} w_0 L = -\frac{17 w_0 L}{24}$$

To find the location of zero shear,

$$V_x = 0 = -\frac{w_0 x^2}{2} + \frac{7}{24} w_0 L$$

$$\text{or, } x = \sqrt{\frac{7}{24}} L = 0.54 L$$

To find the equations of bending moment,

For $0 < x < L/2$

$$M_x = R_A x - \frac{w_0 x^2}{2} = \frac{13 w_0 L x}{24} - \frac{w_0 x^2}{2}$$

At $x = L/2$,

$$M_{x=L/2} = \frac{13 w_0 L^2}{48} - \frac{w_0 L^2}{8} = \frac{7 w_0 L^2}{48}$$

For $L/2 < x < L$

$$M_x = R_A x - \frac{w_0 x^2}{2} - \frac{w}{2}\left(x - \frac{L}{2}\right)\frac{1}{3}\left(x - \frac{L}{2}\right)$$

$$= \frac{13 w_0 L x}{24} - \frac{w_0 x^2}{2} - \frac{1}{2}\frac{2 w_0}{L}\left(x - \frac{L}{2}\right)\left(x - \frac{L}{2}\right)\frac{1}{3}\left($$

$$= \frac{13 w_0 L x}{24} - \frac{w_0 x^2}{2} - \frac{w_0}{3L}\left(x - \frac{L}{2}\right)^3$$

At $x = 0.54L$

$$M_{x=0.54L} = \frac{13 w_0 \times .54 L^2}{24} - \frac{w_0 (.54 L)^2}{2} - \frac{w_0}{2L}\left(0.54L\right.$$

$$= 0.1462 w_0 L^2$$

Shear force and bending moment diagrams are drawn as follows.

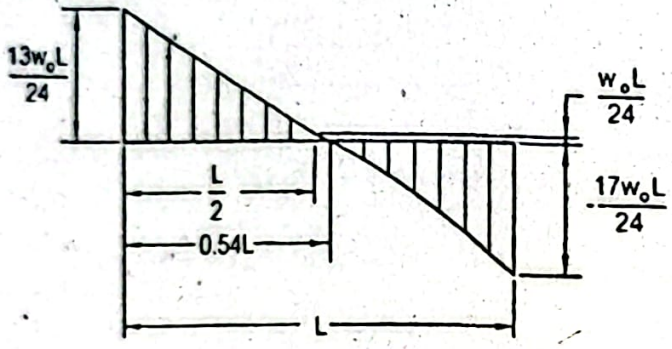

Shear force diagram

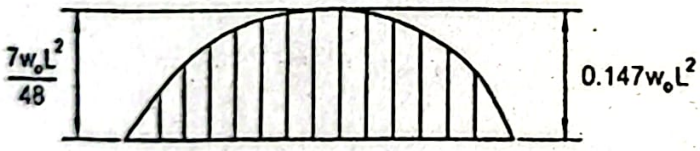

Bending moment diagram

Problem P3.29:

A simply supported beam is subjected to a triangular distribution of load over ha length and a couple as shown in Figure P3.29. Write the equations of shear fo bending moment. Draw also the shear force and bending moment diagrams.

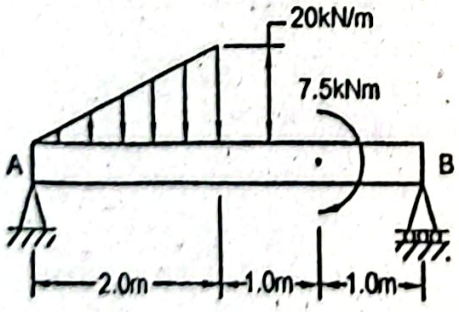

Figure P3.29

Given Data:

Length of beam, $L = 4m$

Load =Triangular distribution with maximum value of $w_0 = 20kN/m$

Couple, $M = 7.5kNm$

To Find:

- Equations of shear force and bending moment
- Shear force and bending moment diagrams

Solution:

Free body diagram of the entire beam is given below.

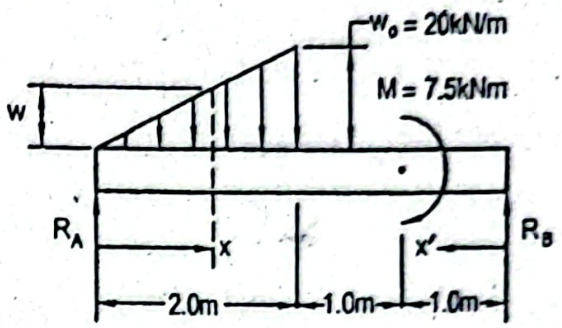

In static equilibrium condition,

$$+\uparrow \sum F_y = 0$$

$$\text{or, } R_A + R_B - \frac{1}{2} \times w_0 \times 2 = 0$$

$$\text{or, } R_A + R_B = \frac{1}{2} \times 20 \times 2 = 20$$

Taking moment about A,

$$+\circlearrowleft \sum M_A = 0$$

$$\text{or, } R_B \times 4 - M - \frac{1}{2} w_0 \times 2 \times \frac{2}{3} \times 2 = 0$$

$$\text{or, } R_B \times 4 - 7.5 - \frac{1}{2} \times 20 \times 2 \times \frac{2}{3} \times 2 = 0$$

$$\text{or, } R_B = 8.54kN$$

Therefore, $R_A = 20 - R_B = (20 - 8.54)kN = 11.46kN$

To determine the equations of shear force,

For $0 < x < 2m$ $\quad V_x = R_A - \frac{1}{2} wx$

$$= 11.46 - \frac{1}{2} wx$$

We have from the similar triangles,

$$\frac{w}{x} = \frac{w_0}{2}$$

$$\text{or, } w = \frac{2}{2} \times x = 10x$$

Substituting the value of w,

$$V_x = 11.46 - \frac{1}{2}\times 10x^2 = \left(11.46 - 5x^2\right)kN$$

At $x = 0$ $\quad V_{x=0} = 11.46kN$

At $x = 2m$, $\quad V_{x=2} = 11.46 - 5\times 2^2 = -8.54kN$

To find the location of zero shear,

$$V_x = 0 = 11.46 - 5x^2$$

or, $x = 1.514m$

For $2m < x < 4m$ $\quad V_x = R_A - \frac{1}{2}w_0 \times 2$

$$= 11.46 - \frac{1}{2}\times 20\times 2 = -8.54kN$$

To find the equations of bending moment,

For $0 < x < 2m$ $\quad M_x = R_A x - \frac{wx}{2}\times\frac{1}{3}x$

$$= 11.46x - \frac{1}{6}\times 10x^3 = \left(11.46x - 1.667x^3\right)kNm$$

At $x = 1.514m$, $\quad M_{x=1.514} = 11.46\times 1.514 - 1.667\times 1.514^3 = 11.57kNm$

At $x = 2m$, $\quad M_{x=2} = 11.46\times 2 - 1.667\times 2^3 = 9.584kNm$

For $2m < x < 3m$ $\quad M_x = R_A x - \frac{1}{2}w_0 \times 2\times\frac{1}{3}\times\left(x - \frac{2}{3}\times 2\right)$

$$= 11.46x - \frac{1}{2}\times 20\times 2\times\left(x - \frac{4}{3}\right)$$

$$= \left(-8.54x + 26.67\right)kNm$$

At $x = 3m$, $\quad M_{x=3} - 8.54\times 3 + 26.667 = 1.05kNm$

For $0 < x' < 1.0m$ $\quad M_{x'} = R_B x' = 8.54x'kNm$

At $x' = 1.0m$, $\quad M_{x'=1.0} = 8.54\times 1.0kNm = 8.54kNm$

Shear force and bending moment diagrams are drawn as follows.

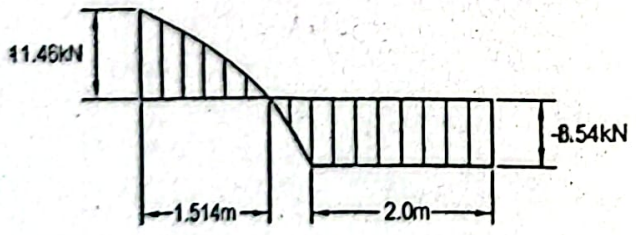

Shear force diagram

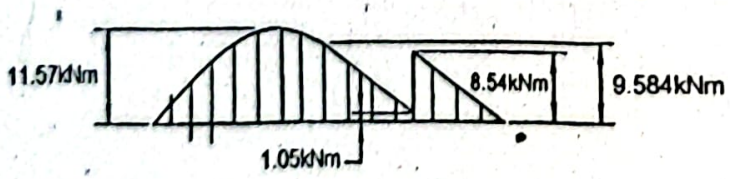

Bending moment diagram

Problem P3.30:

An overhanging beam carries uniformly distributed loads placed symmetrically at both ends as shown in Figure P3.30. Write the equations shear force and bending moment. Draw also the shear force and bending moment diagrams.

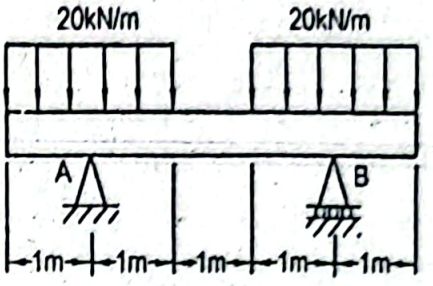

Figure P3.30

Given Data:

Length of beam $= 5m$

Each distributed load, $w = 20kN/m$

To Find:

- Equations of shear force and bending moment
- Shear force and bending moment diagrams

Solution:

Free body diagram of the entire beam is shown below.

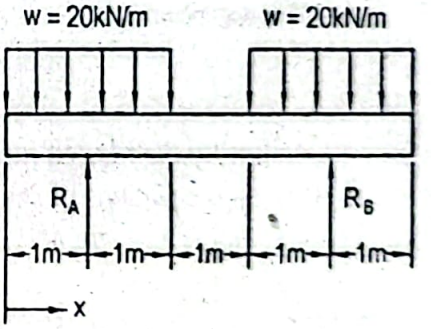

In static equilibrium condition,

$$+\uparrow \sum F_y = 0$$

$$R_A + R_B - 20\times 2 - 20\times 2 = 0$$

or, $R_A + R_B = 80$

For the symmetric loading, $R_A = R_B = 40kN$

To determine the equations of shear force,

For $0 < x < 1.0m$ $\quad V_x = -wx = -20x\ kN$

At $x = 1.0m$, $\quad V_{x=1} = -20\times 1.0 = -20kN$

For $1.0m < x < 2.0m$ $\quad V_x = -wx + R_A$

$$= (-20x + 40)kN$$

At $x = 1.0m$, $\quad V_{x=1} = -20\times 1.0 + 40 = 20kN$

To find the equations of bending moment,

For $0 < x < 1.0m$ $\quad M_x = -\frac{wx^2}{2} = -\frac{20}{2}x^2 = -10x^2\ kNm$

At $x = 1.0m$, $\quad M_{x=1.0} = -10\ kNm$

For $1.0m < x < 2.0m$ $\quad M_x = -\frac{wx^2}{2} + R_A(x-1)$

$$= -\frac{20}{2}x^2 + 40(x-1)$$

$$= (-10x^2 + 40x - 40)\ kNm$$

At $x = 2.0m$ $\quad M_{x=2} = -10\times 2^2 + 40\times 2 - 40 = 0$

Shear force and bending moment diagrams are drawn as follows.

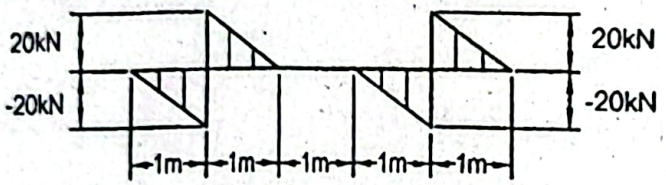

Shear force diagram

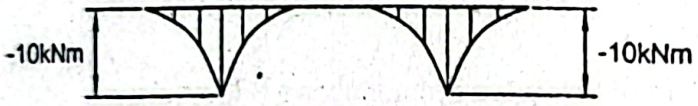

Bending moment diagram

Problem P3.31:

An overhanging beam supports a uniformly distributed load of $25kN/m$ over its ent length as shown in Figure P3.31. Write the equations of shear force and bending mome Draw also the shear force and bending moment diagrams.

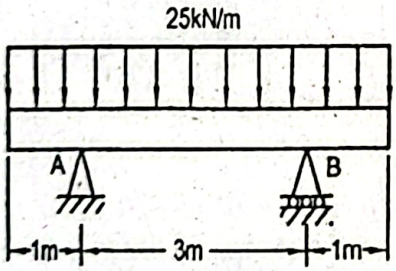

Figure P3.31

Given Data:

Length of beam = $5m$

Distributed load, $w = 25kN/m$

To Find:

- Equations of shear force and bending moment
- Shear force and bending moment diagrams

Solution:

Free body diagram of the entire beam is given below.

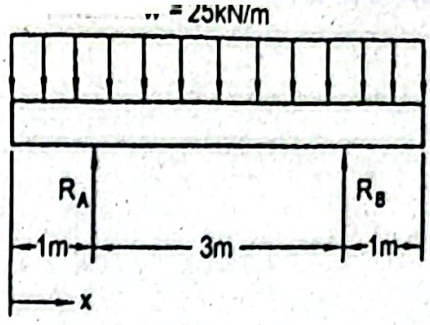

In static equilibrium condition,

$$+\uparrow \sum F_y = 0$$

$$\text{or, } R_A + R_B - w \times 5 = 0$$

$$\text{or, } R_A + R_B = 25 \times 5 = 125$$

For the symmetric loading, $R_A = R_B = \frac{125}{2} kN = 62.5kN$

To determine the equations of shear force,

For $0 < x < 1.0m$ $\quad V_x = -wx = -25x\ kN$

At $x = 1.0m$, $\quad V_{x=1} = -25 \times 1.0 = -25kN$

For $1.0m < x < 4.0m$ $\quad V_x = -wx + R_A$

$$= (-25x + 62.5)kN$$

At $x = 1.0m$, $\quad V_{x=1} = -25 \times 1.0 + 62.5 = 37.5kN$

At $x = 4.0m$, $\quad V_{x=4} = -25 \times 4.0 + 67.5 = -37.5kN$

To find the location of zero shear,

$$V_x = 0 = -25x + 62.5$$

$$\text{or, } x = 2.5m$$

For $4.0m < x < 5.0m$ $\quad V_x = -wx + R_A + R_B$

$$= -25x + 62.5 + 62.5$$

$$= (-25x + 125)kN$$

At $x = 4.0m$, $\quad V_{x=4} = -25 \times 4.0 + 125 = 25kN$

To find the equations of bending moment,

For $0 < x < 1.0m$ $\quad M_x = -\frac{wx^2}{2} = -\frac{25}{2}x^2 = -12.5x^2\ kNm$

At $x = 1.0m$, $\quad M_{x=1.0} = -12.5 \times 1^2\ kNm = -12.5kNm$

For $1.0m < x < 4.0m$ $\quad M_x = -\frac{wx^2}{2} + R_A(x - 1.0)$

$$= -\frac{25}{2}x^2 + 62.5(x - 1.0)$$

$$= -12.5x^2 + 62.5x - 62.5$$

To find the location of zero bending moment (inflection point)

$$M_x = 0 = -12.5x^2 + 62.5x - 62.5$$

$$\text{or, } x = \frac{-62.5 \pm \sqrt{62.5^2 - 4(-12.5)(-62.5)}}{2\times(-12.5)}$$

$$\text{or, } x = 1.382m,\ 3.618m$$

At $x = 2.5m$,

$$M_{x=2.5} = -12.5\times2.5^2 + 62.5\times2.5 - 62.5$$
$$= 15.625kNm = M_{max}$$

For $4.0m < x < 5.0m$

$$M_x = -\frac{wx^2}{2} + R_A(x-1.0) + R_B(x-4)$$
$$= -\frac{25}{2}x^2 + 62.5(x-1.0) + 62.5(x-4)$$
$$= \left(-12.5x^2 + 125x - 312.5\right)kNm$$

At $x = 4.0m$,

$$M_{x=4.0} = -12.5\times4^2 + 125\times4 - 312.5 = -12.5kNm$$

Shear force and bending moment diagrams are drawn as follows.

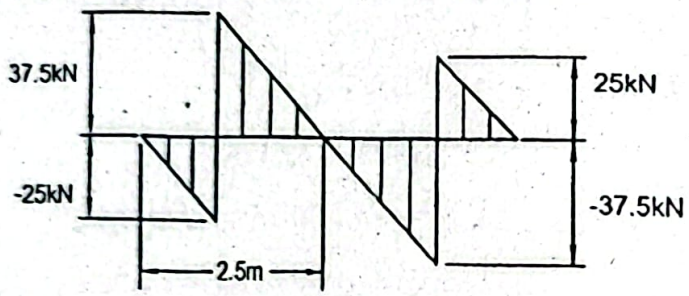

Shear force diagram

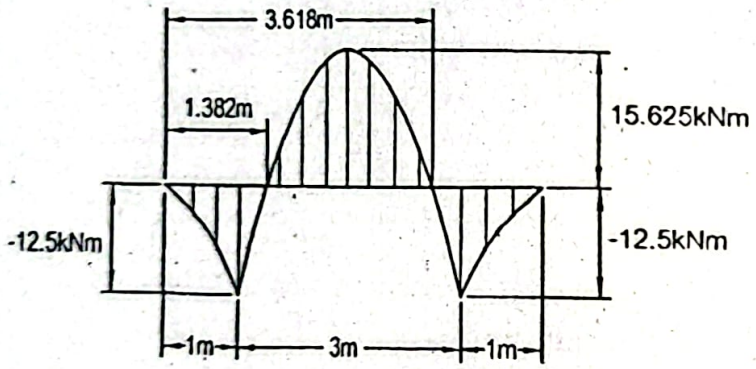

Bending moment diagram

Problem P 3:32

Write the equations of shear force and bending moment for a simply supported bea subjected to a triangular distribution of load placed symmetrically as shown in Figu P3.32. Draw also the shear force and bending moment diagrams.

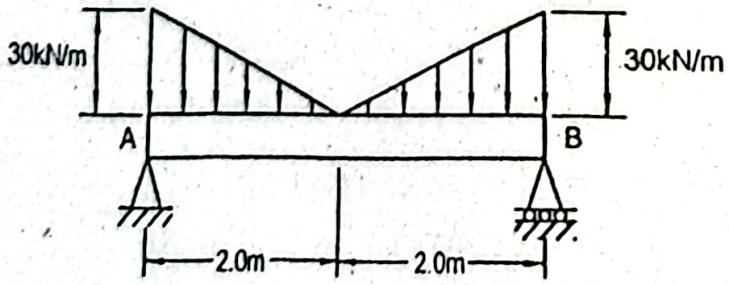

Figure P3.32

Length of beam, $L = 4m$

Load =Triangular distribution with maximum value of $w_0 = 30kN/m$

To Find:

- Equations of shear force and bending moment
- Shear force and bending moment diagrams

Solution:

Free body diagram of the entire beam is shown below.

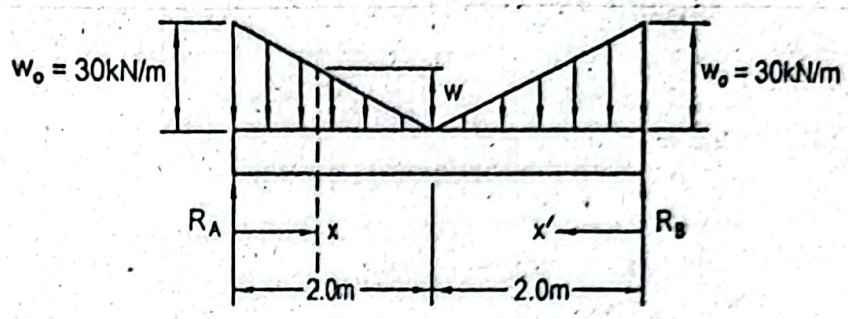

In static equilibrium condition,

$$+\uparrow \sum F_y = 0$$

$$\text{or, } R_A + R_B - \frac{1}{2}\times w_0 \times 2 - \frac{1}{2} w_0 \times 2 = 0$$

$$\text{or, } R_A + R_B = \frac{1}{2}\times 30\times 2 + \frac{1}{2}\times 30\times 2 = 60$$

For the symmetric loading,

$$R_A = R_B = \frac{60}{2} kN = 30kN$$

To determine the equations of shear force,

For $0 < x < 2m$ $\quad V_x = R_A - \left[\frac{1}{2} w_0 \times 2 - \frac{1}{2} w \times (2-x)\right] = 0$

$$= 30 - \left[\frac{1}{2}\times 30\times 2 - \frac{1}{2} w \times (2-x)\right]$$

We have from the similar triangles,

$$\frac{w}{2-x} = \frac{w_0}{2}$$

$$\text{or, } w = \frac{w_0}{2}\times(2-x) = \frac{30}{2}(2-x)$$

$$= 15(2-x) = (30-15x)\,kN/m$$

Substituting the value of w,

$$V_x = 30 - \frac{1}{2}\times 30\times 2 + \frac{1}{2}\times(30-15x)(2-x)$$

$$= (7.5x^2 - 30x + 30)\,kN$$

At $x = 0$, $\quad V_{x=0} = 30kN$

At $x = 2m$, $\quad V_{x=2} = 7.5\times 2^2 - 30\times 2 + 30 = 0kN$

For symmetric loading,

For $0 < x' < 2m$ $V_{x'} = \left(-7.5x'^2 + 30x' - 30\right) kN$

To find the equations of bending moment,

For $0 < x < 2m$ $M_x = R_B(4-x) - \frac{1}{2}w_0 \times 2 \times \left(\frac{10}{3} - x\right) - \frac{1}{2} \times w(2-x) \times \frac{1}{3}(2-x)$

$= 30(4-x) - \frac{1}{2} \times 30 \times 2 \times \left(\frac{10}{3} - x\right) - \frac{1}{6} \times (30 - 15x)(2-x)^2$

$= \left(2.5x^3 - 15x^2 + 30x\right) kNm$

At $x = 2m$, $M_{x=2} = 2.5 \times 2^3 - 15 \times 2^2 + 30 \times 2 = 20kN$

Bending moment is symmetric with respect to the mid point of the beam.

Shear force and bending moment diagrams are drawn as follows.

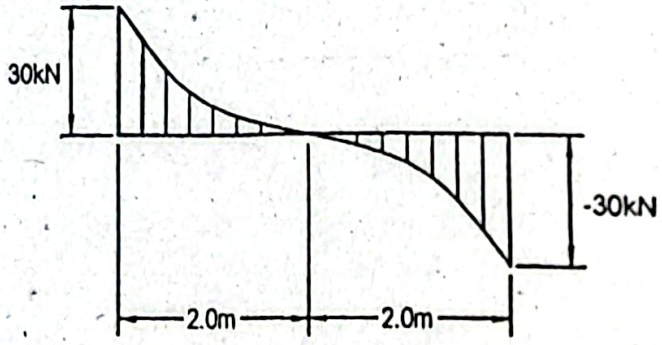

Shear force diagram.

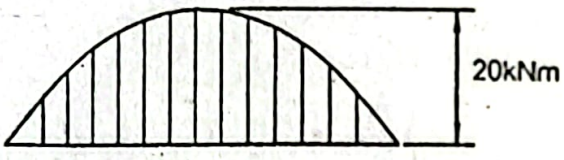

Bending moment diagram

Problem P3.33:

Write the equations of shear force and bending moment for a simply supported be subjected to a concentrated load of *20kN* and a couple of *10kNm* as shown in Fig P3.33. Draw also the shear force and bending moment diagrams.

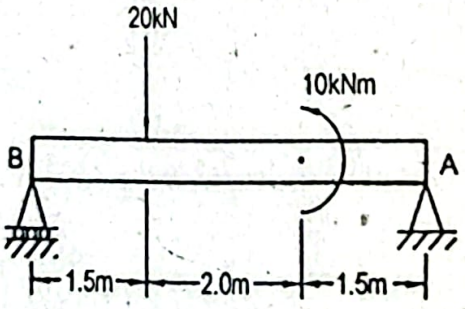

Figure P3.33

Given Data:

Length of beam, $L = 5m$

Concentrated load, $P = 20kN$

Couple, $M = 10kNm$

To Fina:

- Equations of shear force and bending moment
- Shear force and bending moment diagrams

Solution:

Free body diagram of the entire beam is shown below.

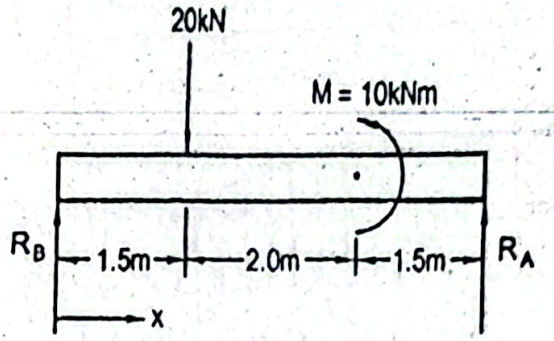

In static equilibrium condition,

$$+\circlearrowleft \sum M_B = 0$$

or, $R_A \times 5 + M - 20 \times 1.5 = 0$

or, $R_A \times 5 + 10 - 20 \times 1.5 = 0$

or, $R_A = 4kN$

$$+\uparrow \sum F_y = 0$$

or, $R_A + R_B = 20$

or, $R_B = 20 - R_A = (20-4)kN = 16kN$

To determine the equations of shear force,

For $0 < x < 1.5m$ $\quad V_x = R_B = 16kN$

For $1.5m < x < 5m$ $\quad V_x = R_B - 20 = 16 - 20 = -4kN$

To find the equations of bending moment,

For $0 < x < 1.5m$ $\quad M_x = R_B x$

$= 16x\ kNm$

At $x = 1.5m$, $\quad M_{x=1.5} = (16 \times 1.5)kN = 24kNm$

For $1.5m < x < 3.5m$ $\quad M_x = R_B x - 2(x - 1.5)$

$= 16x - 20(x - 1.5)$

$= (-4x + 30.0)kNm$

At $x = 3.5m$, $\quad M_{x=3.5} = -4 \times 3.5 + 30.0 = 16kNm$

For $3.5m < x < 5m$ $\quad M_x = R_B x - 20(x - 1.5) - M$

$= 16x - 20x + 30 - 10$

$= (-4x + 20)kNm$

At $x = 3.5m$, $\quad M_{x=3.5} = -4 \times 3.5 + 20 = 6kNm$

Shear force and bending moment diagrams are drawn as follows.

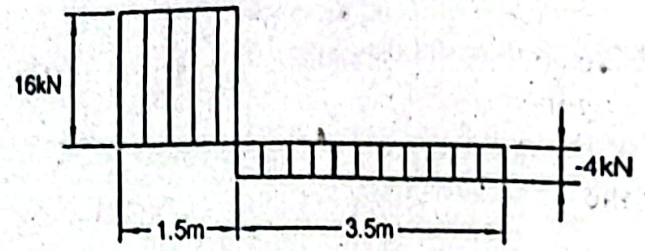

Shear force diagram

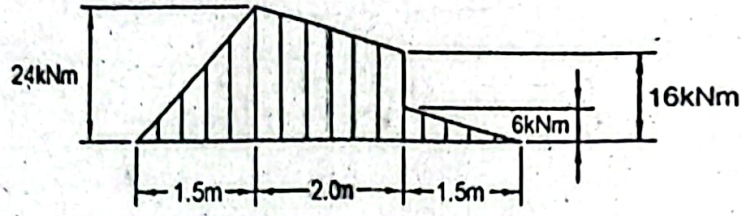

Bending moment diagram

Problem P3.34:

An overhanging beam carries a uniformly distributed load of $25kN/m$ throughout it length as shown in Figure P3.34. Determine the equations of shear force and bending moment. Draw also the shear force and bending moment diagrams..

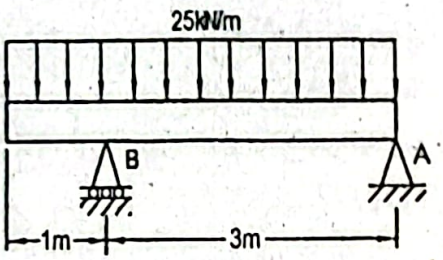

Figure P3.34

Given Data:

Length of beam, $L = 4m$.

Distributed load, $w = 25kN/m$

To Find:

- Equations of shear force and bending moment
- Shear force and bending moment diagrams

Solution:

Free body diagram of the entire beam is given below.

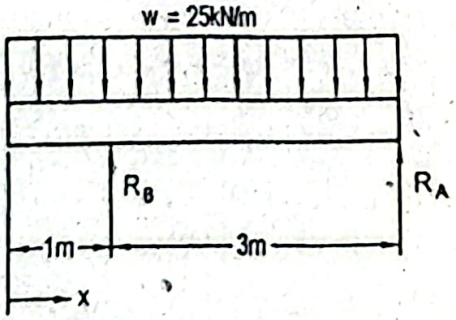

In static equilibrium condition,

$$+\uparrow \sum F_y = 0$$

or, $R_A + R_B - w \times 4 = 0$

or, $R_A + R_B = 25 \times 4 = 100$

Taking moment about A, $+\circlearrowleft \sum M_B = 0$

or, $R_A \times 3 - w \times 4 \times 1.0 = 0$

or, $R_A = \dfrac{25 \times 40 \times 1.0}{3} = 33.33kN$

Therefore, $R_B = 100 - R_A = 100 - 33.33 = 66.67kN$

To determine the equations of shear force,

For $0 < x < 1.0m$ $V_x = -wx = -25x\,kN$

At $x = 1.0m$, $V_{x=1.0} = -25 \times 1.0 = -25kN$

For $1.0m < x < 4.0m$ $V_x = -wx + R_B$

$= (-25x + 66.67)kN$

To find the location of zero shear,

$V_x = 0 = -25x + 66.67$

or, $x = 2.667m$

At $x = 1.0m$, $V_{x=1.0} = -25 \times 1.0 + 66.67 = 41.67kN$

At $x = 4.0m$, $V_{x=4.0} = -25 \times 4.0 + 66.67 = -33.33kN$

Shear force and bending moment diagrams are drawn as follows.

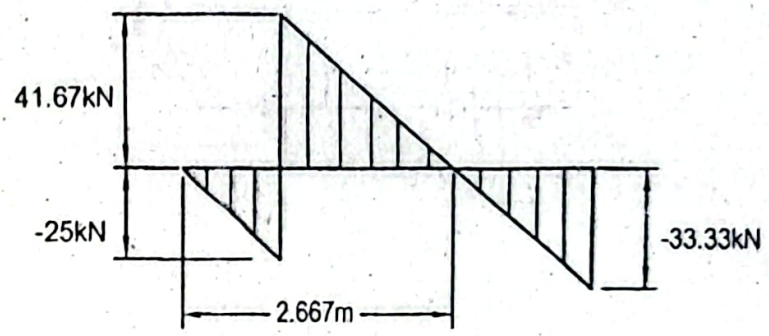

Shear force diagram

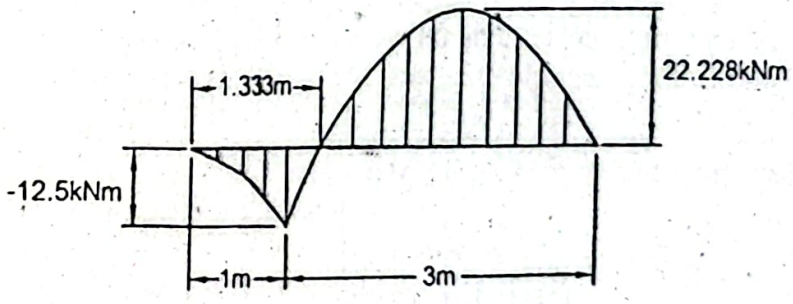

Bending moment diagram

Now to find the equations of bending moment,

For $0 < x < 1.0m$ $M_x = -\dfrac{wx^2}{2} = -\dfrac{25}{2}x^2 = -12.5x^2 kNm$

At $x = 1.0m$, $V_{x=1.0} = -12.5 \times (1.0)^2 = -12.5kNm$

$$M_x = -\frac{wx^2}{2} + R_B(x-1.0)$$

$$= -\frac{25x^2}{2} + 66.67(x-1.0)$$

$$= (-12.5x^2 + 66.67x - 66.67)\,kNm$$

To find the location of zero bending moment (inflection point),

$$x = \frac{-66.67 \pm \sqrt{66.67^2 - 4\times(-12.5)\times(-66.67)}}{2\times(-12.5)}$$

$$= 1.333m$$

At $x = 2.667m$,

$$M_{x=2.667} = -12.5\times(2.667)^2 + 66.67\times 2.667 - 66.67$$

$$= 22.228kNm$$

Problem P3.35:

Write the equations of shear force and bending moment for a simply supported bea subjected to a uniformly distributed load of $15kN/m$ over its entire length and concentrated load of $40kN$ as shown in Figure P3.35. Draw also the shear force a bending moment diagrams.

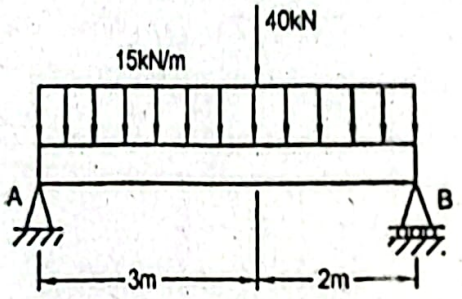

Figure P3.35

Given Data:

Length of beam, $L = 5m$

Distributed load, $w = 15kN/m$

Concentrated load, $P = 40kN$

To Find:

- Equations of shear force and bending moment
- Shear force and bending moment diagrams

Solution:

Free body diagram of the entire beam is given below.

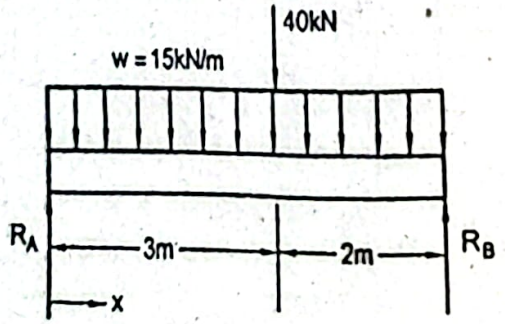

ic equilibrium condition,

$$+\uparrow \sum F_y = 0$$

or, $R_A + R_B - w\times 5 - 40 = 0$

or, $R_A + R_B = 15\times 5 + 40 = 115$

$$+\circlearrowleft \sum M_A = 0$$

or, $R_B \times 5 - 40\times 3 - w\times 5\times 2.5 = 0$

or, $R_B \times 5 - 40\times 3 - 15\times 5\times 2.5 = 0$

or, $R_B = 61.5kN$

efore, $R_A = 115 - R_B = 115 - 61.5 = 53.5kN$

etermine the equations of shear force,

$0 < x < 3m$ $V_x = R_A - wx$

$= (53.5 - 15x)kN$

$= 3m$, $V_{x=3} = 53.5 - 15\times 3 = 8.5kN$

$3m < x < 5m$ $V_x = wx - 40$

$= 53.5 - 15x - 40 = (13.5 - 15)kN$

$x = 3m$, $V_{x=3} = 13.5 - 15\times 3 = -31.5kN$

ar force and bending moment diagrams are drawn as follows.

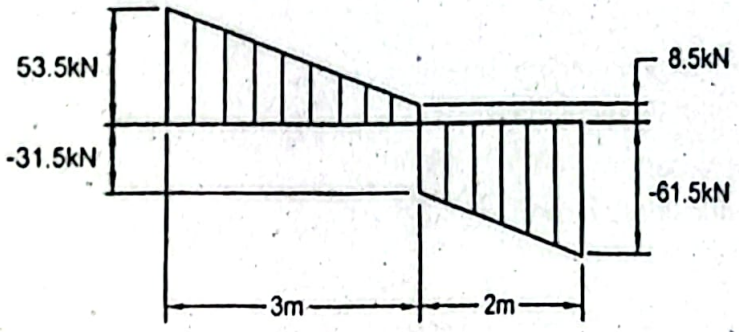

Shear force diagram

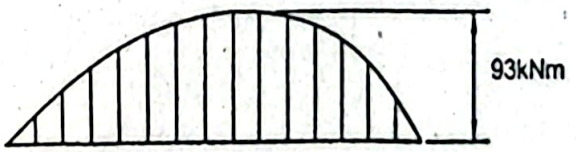

Bending moment diagram

low to find the equations of bending moment,

or $0 < x < 3m$ $M_x = R_A x - \frac{wx^2}{2}$

$= 53.5x - \frac{15x^2}{2} = (53.5 - 7.5x^2)kNm$

t $x = 3m$, $M_{x=3} = 53.5\times 3 - 7.5\times 3^2 = 93kNm$

For $3m < x < 5m$

$$= 53.5x - \frac{15x^2}{2} - 40x + 120$$

$$= \left(-7.5x^2 + 13.5x + 120\right) kNm$$

At $x = 3m$, $M_{x=3} = -7.5 \times 3^2 + 13.5 \times 3 + 120 = 93 kNm$

Problem P3.36:

Write the equations of shear force and bending moment for a simply supported subjected to a couple of $5kNm$ as shown in Figure P3.36. Draw also the shear fo bending moment diagrams.

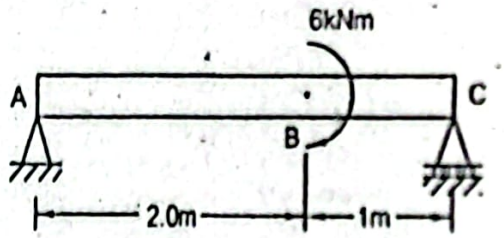

Figure P3.36

Given Data:

Length of beam, $L = 3m$

Couple, $M = 6kNm$

To Find:

- Equations of shear force and bending moment
- Shear force and bending moment diagrams

Solution:

Free body diagram of the entire beam is shown below.

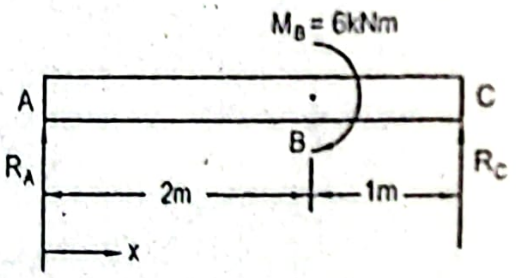

In static equilibrium condition,

$$+\uparrow \sum F_y = 0$$

or, $R_A + R_C = 0$

Taking moment about A, $+\circlearrowleft \sum M_A = 0$

or, $R_C \times 3 - M_B = 0$

or, $R_C = \frac{M_B}{3} = \frac{6}{3} kN = 2kN$

Substituting in Equation (i), $R_A = -R_C = -2kN$

To determine the equation of shear force,

$0 < x < 3m$ $\quad V_x = R_A = -2kN$

find the equations of bending moment,

$0 < x < 2m$ $\quad M_x = R_A x = -2x$

$x = 2m$, $\quad M_{x=2} = -4kNm$

$2m < x < 3m$ $\quad M_x = R_A x + 6$

$= (-2x + 6)$

$x = 2m$, $\quad M_{x=2} = -2 \times 2 + 6 = 2kNm$

ear force and bending moment diagrams are drawn as follows.

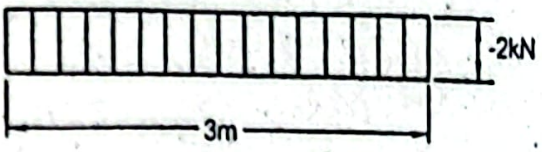

Shear force diagram

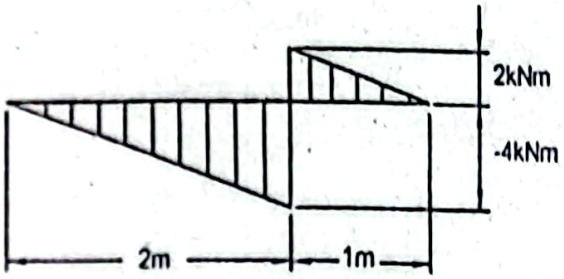

Bending moment diagram

blem P3.37:

overhanging beam is subjected to a uniformly distributed load of $20kN/m$ and a ple of $10kNm$ as shown in Figure P3.37. Determine the equations of shear force and ding moment. Draw also the shear force and bending moment diagrams.

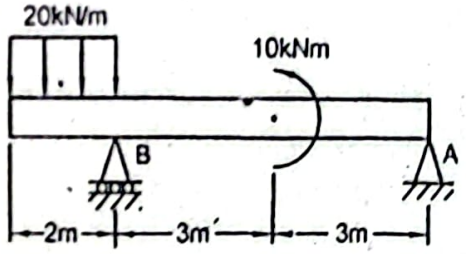

Figure P3.37

en Data:

gth of beam, $L = 8m$

ributed load, $w = 20kN/m$

ple, $M = 10kNm$

Find:

uations of shear force and bending moment

ear force and bending moment diagrams

tion:

body diagram of the entire beam is given in the figure below.

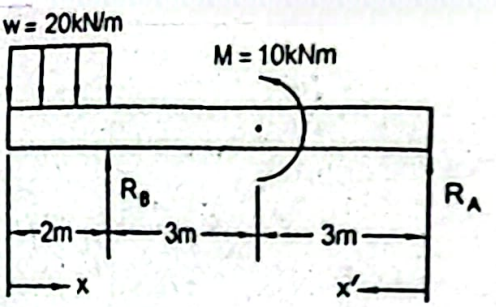

In static equilibrium condition,

$$+\uparrow \sum F_y = 0$$

or, $R_A + R_B - w \times 2 = 0$

or, $R_A + R_B = 20 \times 2 = 40$

Taking moment about A, $+\circlearrowleft \sum M_A = 0$

or, $M - R_B \times 6 + w \times 2 \times 7 = 0$

or, $10 - R_B \times 6 + 20 \times 2 \times 7 = 0$

or, $R_B = 48.33kN$

Therefore, $R_A = 40 - R_B = (40 - 48.33)\,kN = -8.33kN$

To determine the equations of shear force,

For $0 < x < 2m$ $\quad V_x = -wx = -20x\ kN$

At $x = 2m$, $\quad V_{x=2} = -20 \times 2 = -40kN$

For $2 < x < 8m$ $\quad V_x = -w \times 2 + R_B$

$= -20 \times 2 + 48.33 = 8.33kN$

Shear force and bending moment diagrams are drawn as follows.

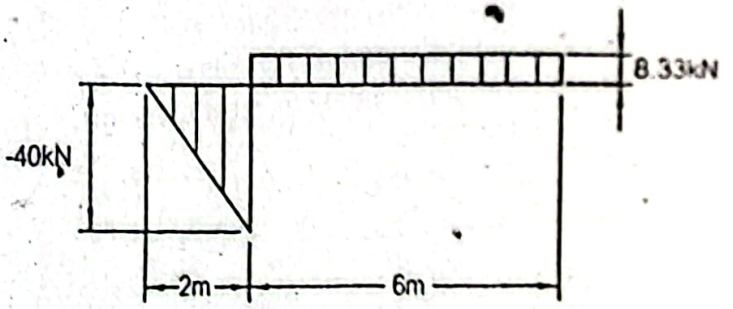

Shear force diagram

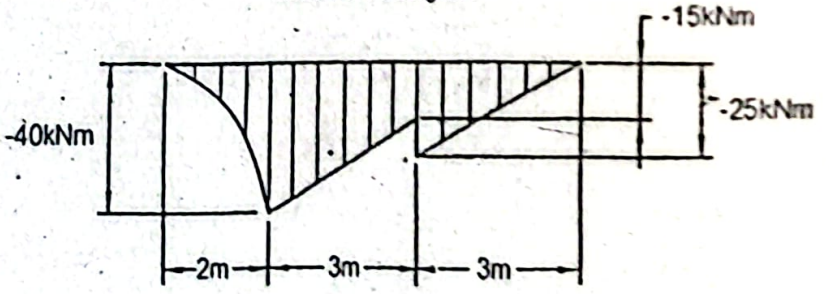

Bending moment diagram

Now to find the equations of bending moment,

For $0 < x < 2m$ $\quad M_x = -\dfrac{wx^2}{2}$

$$= -\frac{20x^2}{2} - 10x^2 \ kNm$$

$x = 2m$,

$$M_{x=2} = -10(2.0)^2 = -40kNm$$

$2m < x < 5m$

$$M_x = -w \times 2(x - 1.0) + R_B(x - 2)$$
$$= -20 \times 2(x - 1.0) + 48.33(x - 2)$$
$$= (8.33x - 56.66)kNm$$

$x = 5m$,

$$M_{x=5} = 8.33 \times 5 - 56.66 = -15.01kNm \approx 15kNm$$

$0 < x' < 3m$

$$M_{x'} = R_A x'$$
$$= -8.33x' \ kNm$$

$x' = 3m$,

$$M_{x'=3} = -8.33 \times 3kNm = -24.99kNm \approx -25kNm$$

blem P3.38:

mply supported beam is subjected to a uniformly distributed load of $20kN/m$ over of its length and a couple of $10kNm$ as shown in Figure P3.38. Write the equations hear force and bending moment. Draw also the shear force and bending moment rams.

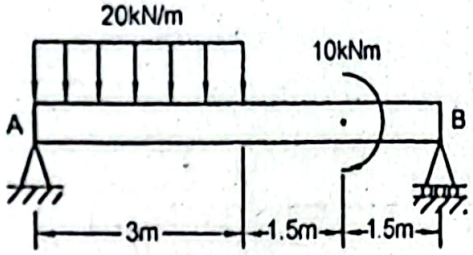

Figure P3.38

n Data:

gth of beam, $L = 6m$

ributed load, $w = 20kN/m$

ple, $M = 10kNm$

Find:

uations of shear force and bending moment

ear force and bending moment diagrams

ution:

body diagram of the entire beam is shown below.

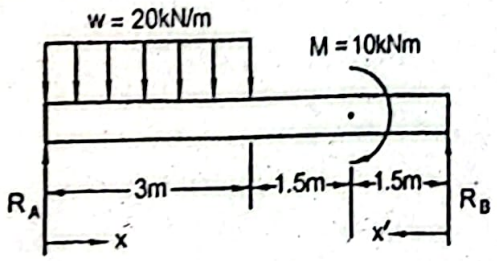

atic equilibrium condition,

$R_A + R_B$ w.r.t.

or, $R_A + R_B = 20 \times 3 = 60$

Taking moment about A, $+\circlearrowleft \sum M_A = 0$

or, $R_B \times 6 - M - w \times 3 \times \frac{3}{2} = 0$

or, $R_B \times 6 - 10 - 20 \times 3 \times \frac{3}{2} = 0$

or, $R_B = 16.67kN$

Therefore, $R_A = 60 - R_B = 60 - 16.67 = 43.33kN$

To determine the equations of shear force,

For $0 < x < 3m$ $V_x = R_A - wx$

$= (43.33 - 20x)kN$

At $x = 0$, $V_{x=0} = 43.33kN$

To find the location of zero shear, $V_x = 0 = 43.33 - 20x$

or, $x = 2.17m$

At $x = 3m$, $V_{x=3} = 43.33 - 20 \times 3 = -16.67kN$

For $3m < x < 6m$ $V_x = R_A - w \times 3$

$= 43.33 - 20 \times 3 = -16.67kN$

To find the equations of bending moment,

For $0 < x < 3m$ $M_x = R_A x - \frac{wx^2}{2}$

$= 43.33x - \frac{20x^2}{2}$

$= (43.33x - 10x^2)\ kNm$

At $x = 2.17m$, $M_{x=2.17} = 43.33 \times 2.17 - 10(2.17^2)$

$= 46.94kNm = M_{max}$

At $x = 3m$, $M_{x=2.17} = 43.33 \times 3 - 10(3^2) = 39.99kNm$

For $3m < x < 4.5m$ $M_x = R_A x - w \times 3 \times (x - 1.5)$

$= 43.33x - 20 \times 3(x - 1.5)$

$= (-16.67x + 90)kNm$

At $x = 4.5m$, $M_{x=4.5} = -16.67 \times 4.5 + 90 = 14.99kNm$

For $0 < x' < 1.5m$ $M_{x'} = R_B x'$

$= 16.67x'\ kNm$

At $x' = 1.5m$, $M_{x'=1.5} = 16.67 \times 1.5kNm = 25.01kNm$

Shear force and bending moment diagrams are drawn as follows.

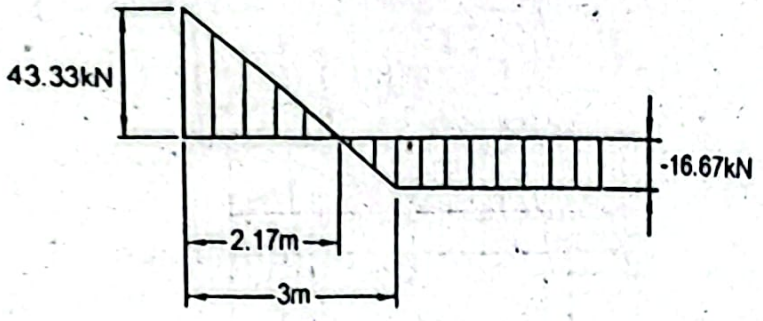

Shear force diagram

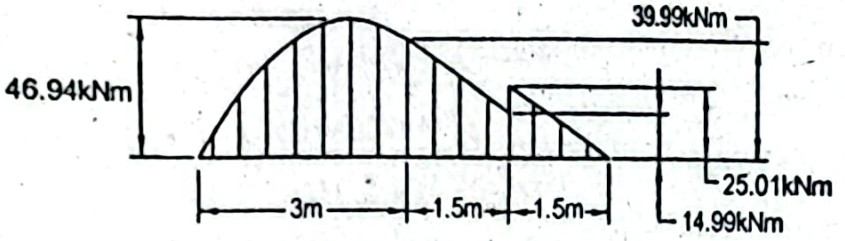

Bending moment diagram

em P3.39:

erhanging beam carries a uniformly distributed load of $25kN/m$ between two ts and concentrated loads, each of $30kN$ at its ends as shown in Figure P3.39. nine the equations of shear force and bending moment. Draw also the shear force nding moment diagrams.

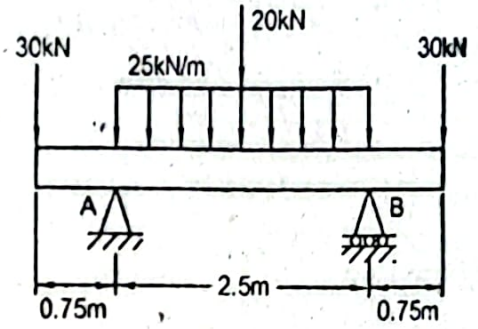

Figure P3.39

Data:

n of beam, $L = 4m$

uted load, $w = 25kN/m$

ntrated loads $= 30kN, 20kN$ and $30kN$

d:

tions of shear force and bending moment

r force and bending moment diagrams

on:

ody diagram of the entire beam is given below.

ic equilibrium condition,

$$+\uparrow \sum F_y = 0$$

$$R_A + R_B - 30 - 20 - 30 - w \times 2.5 = 0$$

$$\text{or, } R_A + R_B = 30 + 20 + 30 + 25 \times 2.5 = 142.5$$

For the symmetric loading, $R_A = R_B$

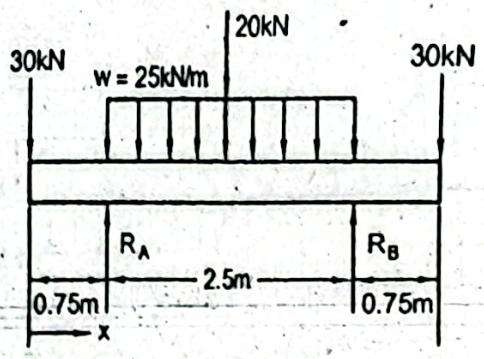

To determine the equations of shear force,

For $0 < x < 0.75m$ $\quad V_x = -30kN$

For $0.75m < x < 2m$ $\quad V_x = -30 + R_A - w(x - 0.75)$

$= -30 + 71.25 - 25(x - 0.75)$

$= (-25x + 60)kN$

At $x = 0.75m$, $\quad V_{x=0.75} = -25 \times 0.75 + 60 = -41.25kN$

At $x = 2m$, $\quad V_{x=2} = -25 \times 2 + 60 = 10kN$

For $2m < x < 3.25m$ $\quad V_x = -30 + R_A - w(x - 0.75) - 20$

$= -30 + 71.25 - 25(x - 0.75) - 20$

$= (-25x + 40)kN$

At $x = 2m$, $\quad V_x = -25 \times 2 + 40 = -10kN$

At $x = 3.25m$, $\quad V_x = -25 \times 3.25 + 40 = -41.25kN$

For $3.25m < x < 4m$ $\quad V_x = -30 + R_A - w \times 2.5 - 20 + R_B$

$= -30 + 71.25 - 25 \times 2.5 - 20 + 71.25$

$= 30kN$

To find the equations of bending moment,

For $0m < x < 0.75m$ $\quad M_x = -30x\ kNm$

At $x = 0.75m$, $\quad M_x = -30 \times 0.75 = -22.5kNm$

$$M_x = -30x + R_A(x - 0.75) - \frac{w}{2}(x - 0.75)^2$$

$$= -30x + 71.25(x - 0.75) - \frac{25}{2}(x - 0.75)^2$$

$$= (-12.5x^2 + 60x - 60.47)\ kNm$$

At $x = 2m$, $\quad M_{x=2} = -12.5 \times 2^2 + 60 \times 2 - 60.47 = 9.53kNm$

To find the location of zero bending moment (inflection point),

$$x = \frac{-60 \pm \sqrt{60^2 - 4(-12.5)(-60.47)}}{2 \times (-12.5)}$$

$$= 1.44m$$

Bending moment is symmetric with respect to the mid point of the beam.

ar force and bending moment diagrams are drawn as follows.

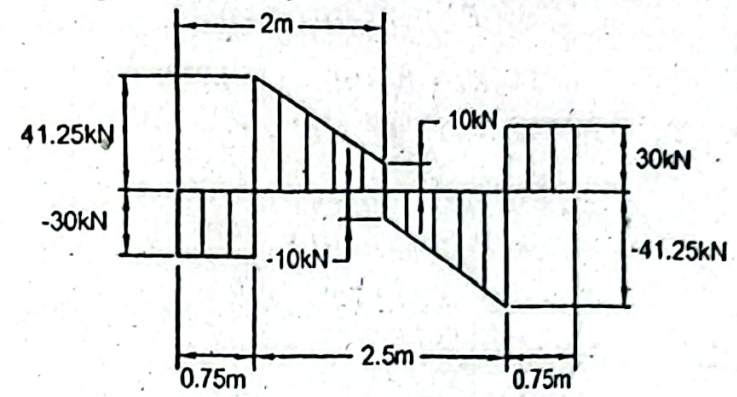

Shear force diagram

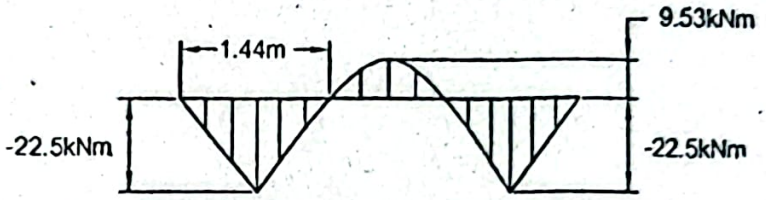

Bending moment diagram

oblem P3.40:

ite the equations of shear force and bending moment of an overhanging beam carrying o concentrated loads as shown in Figure P3.40. Draw also the shear force and bending ment diagrams.

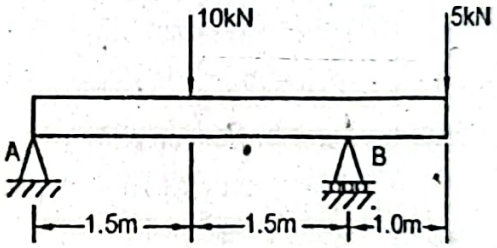

Figure P3.40

ven Data:

ngth of beam, $L = 4m$.

ncentrated loads $= 10kN$ and $5kN$

Find:

quations of shear force and bending moment

hear force and bending moment diagrams

lution:

ee body diagram of the entire beam is shown below.

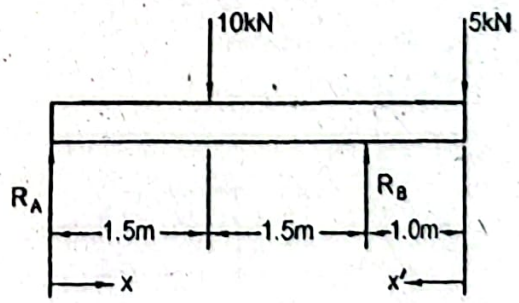

In static equilibrium condition,

$$+\uparrow \sum F_y = 0$$

or, $R_A + R_B - 10 - 5 = 0$

or, $R_A + R_B = 15$

Taking moment about A, $+\circlearrowleft \sum M_A = 0$

or, $R_B \times 3 - 10 \times 1.5 - 5 \times 4 = 0$

or, $R_B = 11.67kN$

Therefore, $R_A = 15 - R_B = 15 - 11.67 = 3.33kN$

To determine the equations of shear force,

For $0 < x < 1.5m$ $V_x = R_A = 3.33kN$

For $1.5m < x < 3m$ $V_x = R_A - 10$

$= 3.33 - 6.67kN$

For $3m < x < 4m$ $V_x = R_A - 10 + R_B$

$= 3.33 - 10 + 11.67 = 5kN$

To find the equations of bending moment,

For $0 < x < 1.5m$ $M_x = R_A x$

$= 3.33x\ kNm$

At $x = 1.5m$, $M_{x=1.5} = 3.33 \times 1.5 = 5kNm$

For $1.5m < x < 3m$ $M_x = R_A x - 10(x - 1.5)$

$= 3.33x - 10x + 15$

$= (-6.67x + 15)kNm$

To find the location of zero bending moment (inflection point)

$M_x = 0 = -6.67x + 15$

or, $x = 2.25m$

For $0 < x' < 1.0m$ $M_{x'} = -5x'$

At $x' = 1.0$, $M_{x'=1.0} = -5kNm$

Shear force and bending moment diagrams are drawn as follows.

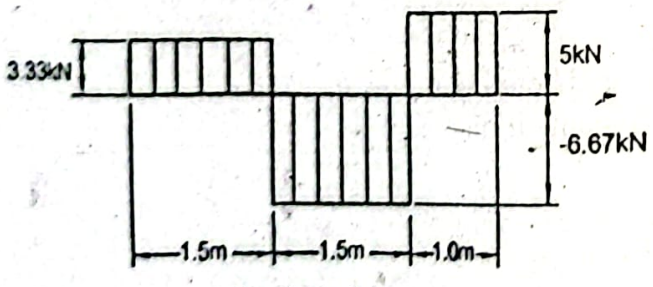

Shear force diagram

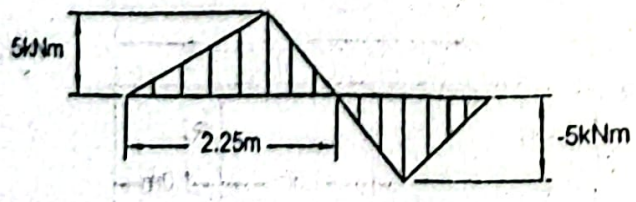

Bending moment diagram

Problem P3.41:

A simply supported beam carries three concentrated loads as shown in Figure P3.41. Write the equations of shear force and bending moment. Draw also the shear force and bending moment diagrams.

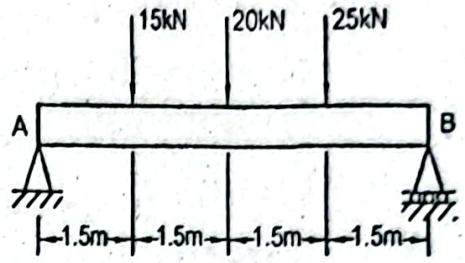

Figure P3.41

Given Data:

Length of beam, $L = 6m$

Concentrated loads $= 15kN, 20kN$ and $25kN$

To Find:

- Equations of shear force and bending moment
- Shear force and bending moment diagrams

Solution:

Free body diagram of the entire beam is given below.

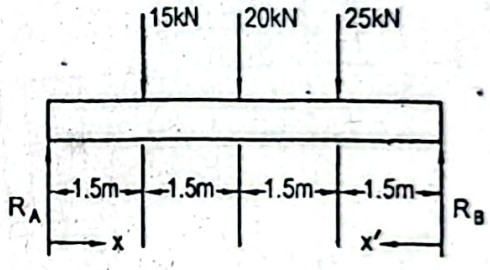

In static equilibrium condition,

$$+\uparrow \sum F_y = 0$$

or, $R_A + R_B - 15 - 20 - 25 = 0$

or, $R_A + R_B = 60$

Taking moment about A,

$$+\circlearrowleft \sum M_A = 0$$

or, $R_B \times 6 - 15 \times 1.5 - 20 \times 3 - 25 \times 4.5 = 0$

or, $R_B = 32.5kN$

Therefore, $R_A = 60 - R_B = 60 - 32.5 = 27.5kN$

To determine the equations of shear force,

For $0 < x < 1.5m$ $\quad V_x = R_A = 27.5kN$

For $1.5m < x < 3m$ $\quad V_x = R_A - 15 = 27.5 - 15 = 12.5kN$

For $3m < x < 4.5m$ $\quad V_x = R_A - 15 - 20 = 27.5 - 35 = -7.5kN$

For $4.5m < x < 6m$ $\quad V_x = R_A - 15 - 20 - 25 = 27.5 - 60 = -32.5kN$

To find the equations of bending moment,

For $0 < x < 1.5m$ $M_x = R_A x$

$= 27.5x\ kNm$

At $x = 1.5m$, $M_{x=1.5} = 27.5 \times 1.5 = 41.25kNm$

For $1.5m < x < 3m$ $M_x = R_A x - 15(x - 1.5)$

$= 27.5x - 15(x - 1.5)$

$= (12.5x + 22.5)\ kNm$

At $x = 3m$, $M_{x=3} = 12.5 \times 3 + 22.5 = 60kNm$

For $3m < x < 4.5m$ $M_x = R_A x - 15(x - 1.5) - 20(x - 3)$

$= 27.5x - 15(x - 1.5) - 20(x - 3)$

$= (-7.5x + 82.5)\ kNm$

At $x = 4.5m$, $M_{x=4.5} = -7.5 \times 45 + 82.5 = 48.75kNm$

For $0 < x' < 1.5m$ $M_{x'} = R_B x'$

$= 32.5x'\ kNm$

At $x' = 1.5m$, $M_{x'=1.5} = 32.5 \times 1.5kNm = 48.75kNm$

Shear force and bending moment diagrams are drawn as follows.

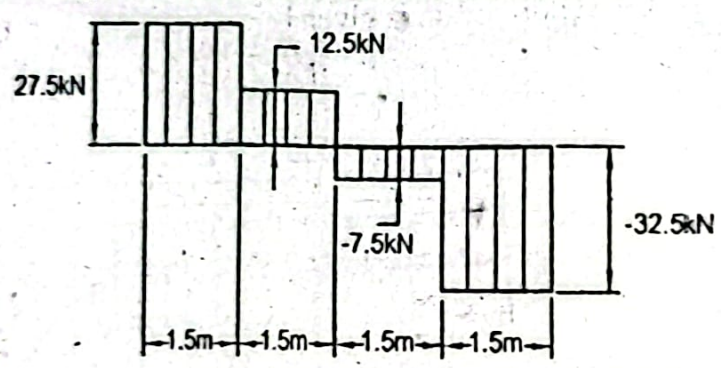

Shear force diagram

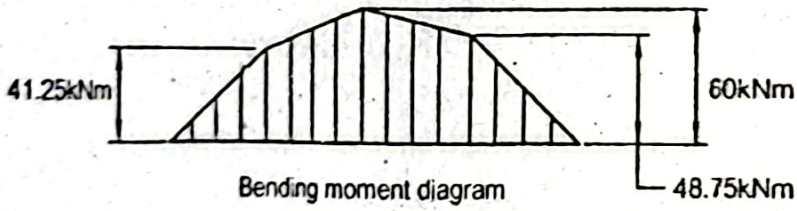

Bending moment diagram

Problem P3.42:

Write the equations of shear force and bending moment for an overhanging carrying a concentrated load and a uniformly distributed load as shown in Figure P Draw also shear force and bending moment diagrams.

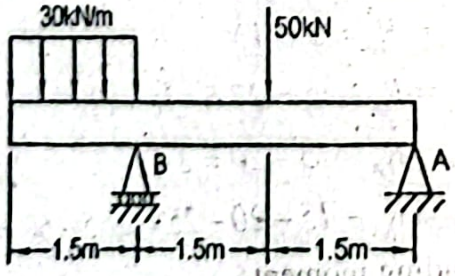

Figure P3.42

Given Data:

Length of beam, $L = 4.5m$

Concentrated load, $P = 50kN$

Distributed load, $w = 30kN/m$

To Find:

- Equations of shear force and bending moment
- Shear force and bending moment diagrams

Solution:

Free body diagram of the entire beam is given in the figure below.

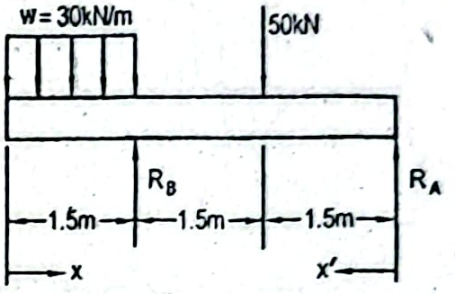

In static equilibrium condition,

$$+\uparrow \sum F_y = 0$$

or, $R_A + R_B - 50 - w \times 1.5 = 0$

or, $R_A + R_B = 50 + 30 \times 1.5 = 95$

Taking moment about A, $+\circlearrowleft \sum M_A = 0$

or, $50 \times 1.5 - R_B \times 3 + 30 \times 1.5 \times 3.75 = 0$

or, $R_B = 81.25kN$

Therefore, $R_A = 95 - R_B = 95 - 81.25 = 13.75kN$

To determine the equations of shear force,

For $0 < x < 1.5m$ $\quad V_x = -wx = 30xkN$

At $x = 1.5m$, $\quad V_{x=1.5} = -30 \times 1.5 = -45kN$

For $1.5m < x < 3m$ $\quad V_x = -w \times 1.5 + R_B$

$= -30 \times 1.5 + 81.25 = 36.25kN$

For $3m < x < 4.5m$ $\quad V_x = -w \times 1.5 + R_B - 50$

$= -30 \times 1.5 + 81.25 - 50 = -13.75kN$

To find the equations of bending moment,

For $0 < x < 1.5m$ $\quad M_x = -\dfrac{wx^2}{2}$

$= -\dfrac{30x^2}{2} = -15x^2 kNm$

At $x = 1.5m$, $\quad M_{x=1.5} = -15 \times (1.5)^2 = -33.75kNm$

For $1.5m < x < 3m$ $\quad M_x = -w \times 1.5(x - 0.75) + R_B(x - 1.5)$

$= -30 \times 1.5(x - 0.75) + 81.25(x - 1.5)$

To find the location of zero bending moment (inflection point)

$$M_x = 0 = 36.25x - 88.13$$

or, $x = 2.43m$

At $x = 3m$, $M_{x=3} = 36.25 \times 3 - 88.13 = 20.62kNm$

For $0 < x' < 1.5m$ $M_{x'} = R_A x'$

$= 13.75x'\ kNm$

At $x' = 1.5m$, $M_{x'=1.5} = 13.75 \times 1.5kNm = 20.63kNm$

Shear force and bending moment diagrams are drawn as follows.

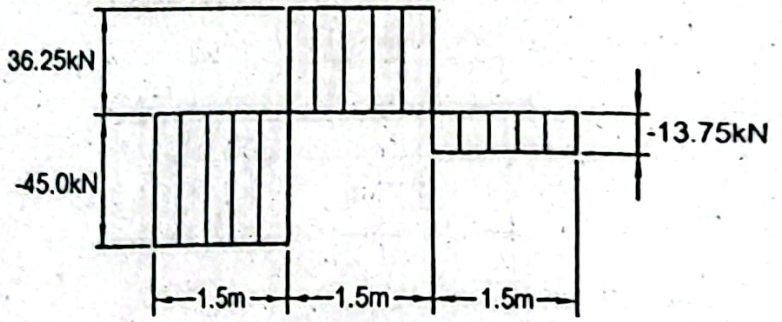

Shear force diagram

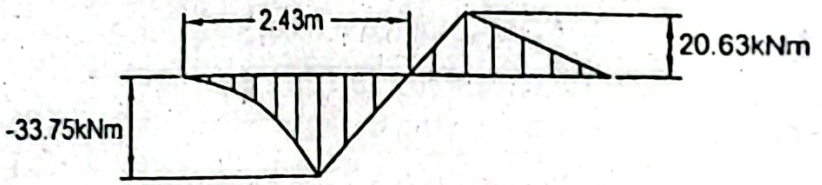

Bending moment diagram

Problem P3.43:

Determine the equations of shear force and bending moment for a simply supported subjected to a concentrated load of *50kN* and a uniformly distributed load of *20k* as shown in Figure P3.43. Draw also the shear force and bending moment diagrams.

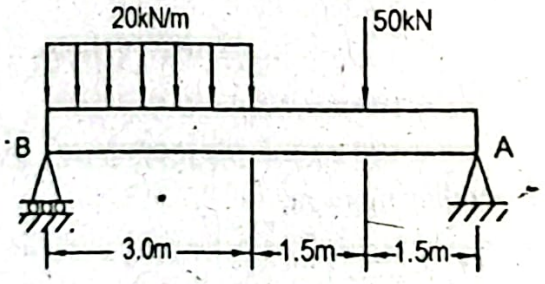

Figure P3.43

Given Data:

Length of beam, $L = 6m$

Concentrated load, $P = 50kN$

Distributed load, $w = 20kN/m$

To Find:

- Equations of shear force and bending moment

ear force and bending moment diagrams

tion:

: body diagram of the entire beam is shown below.

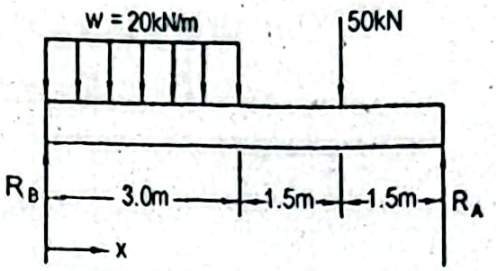

atic equilibrium condition,

$$+\uparrow \sum F_y = 0$$

or, $R_A + R_B - 50 - w\times 3 = 0$

or, $R_A + R_B = 50 + 20\times 3 = 110.0$

ing moment about A, $+\circlearrowleft \sum M_A = 0$

or, $-R_B \times 6 + w\times 3\times 4.5 + 50\times 1.5 = 0$

or, $-R_B \times 6 + 20\times 3\times 4.5 + 50\times 1.5 = 0$

or, $R_B = 57.5kN$

refore, $R_A = 110 - R_B = 110 - 57.5 = 52.5kN$

letermine the equations of shear force,

$0 < x < 3m$ $V_x = R_B - wx$

$= (57.5 - 20x)kN$

ind the location of zero shear,

$V_x = 0 = 57.5 - 20x$

or, $x = 2.875m$

$x = 0$, $V_{x=0} = 57.5kN$

$x = 3m$, $V_{x=3} = 57.5 - 20\times 3 = -2.5kN$

$3m < x < 4.5m$ $V_x = R_B - w\times 3$

$= 57.5 - 20\times 3 = -2.5kN$

$4.5m < x < 6m$ $V_x = R_B - w\times 3 - 50.0$

$= 57.5 - 20\times 3 - 50 = -52.5kN$

ind the equations of bending moment,

$0 < x < 3m$ $M_x = -R_B x - \frac{wx^2}{2}$

$= 57.5x - \frac{20x^2}{2} = (57.5x - 10x^2)kNm$

$x = 3m$, $M_{x=3} = 57.5\times 3 - 10\times (3)^2 = 82.5kNm$

$x = 2.875m$, $M_{x=2.875} = 57.5\times 2.875 - 10\times (2.875)^2$

$= 82.66kNm = M_{max}$

For $3m < x < 4.5m$

$$M_x = R_B \cdots$$
$$= 57.5x - 20 \times 3 \times (x - 1.5)$$
$$= (-2.5x + 90)\, kNm$$

At $x = 4.5m$,

$$M_{x=4.5} = -2.5 \times 4.5 + 90 = 78.75 kNm$$

For $4.5m < x < 6m$

$$M_x = R_B x - w \times 3 \times (x - 1.5) - 50 \times (x - 4.5)$$
$$= 57.5x - 20 \times 3 \times (x - 1.5) - 30 \times (x - 4.5)$$
$$= (-52.5x + 315)\, kNm$$

Shear force and bending moment diagrams are drawn as follows.

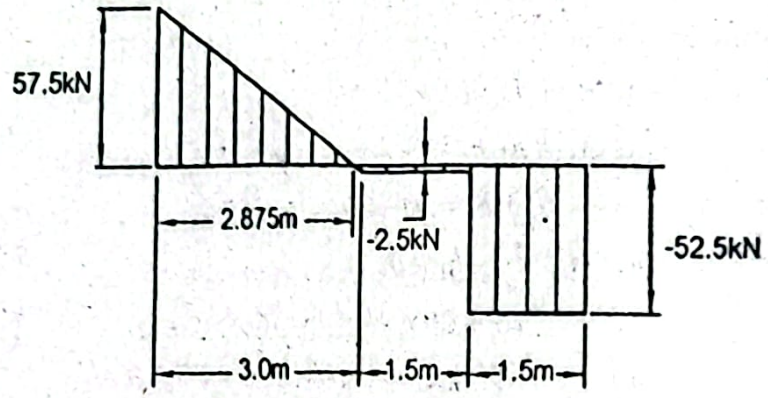

Shear force diagram

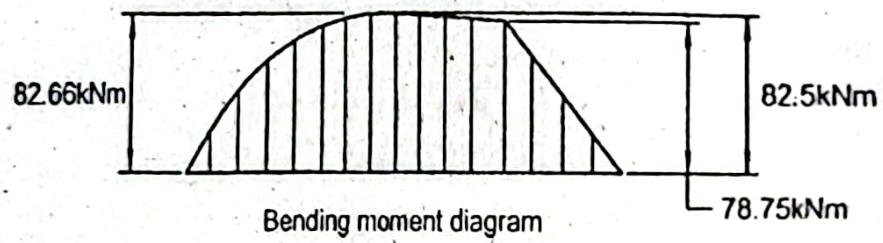

Bending moment diagram

Problem P3.44:

Write the equations of shear force and bending moment for an overhanging carrying a concentrated load at its free end and a uniformly distributed load ov length between two supports as shown in Figure P3.44. Draw also the shear for bending moment diagrams.

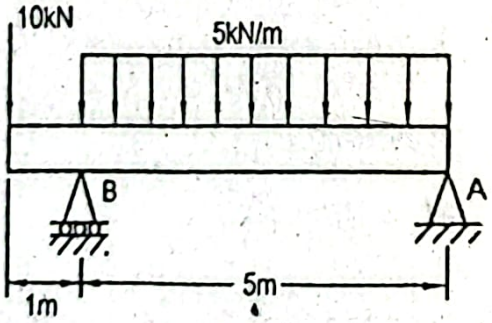

Figure P3.44

Given Data:

Length of beam, $L = 6m$

Concentrated load, $P = 10kN$

Distributed load, $w = 5kN / m$

o Find:

Equations of shear force and bending moment

Shear force and bending moment diagrams

olution:

ree body diagram of the entire beam is given in the figure below.

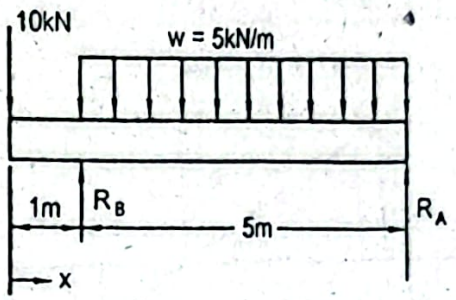

static equilibrium condition,

$$+\uparrow \sum F_y = 0$$

$$\text{or, } R_A + R_B - 10 - w\times 5 = 0$$

$$\text{or, } R_A + R_B = 10 + 5\times 5 = 35$$

aking moment about A, $+\circlearrowleft \sum M_A = 0$

$$\text{or, } 10\times 6 - R_B \times 5 + w\times 5\times 2.5 = 0$$

$$\text{or, } 10\times 6 - R_B \times 5 + 5\times 5\times 2.5 = 0$$

$$\text{or, } R_B = 24.5kN$$

herefore, $R_A = 35 - R_B = 35 - 24.5 = 10.5kN$

o determine the equations of shear force,

or $0 < x < 1.0m$ $\quad V_x = 10kN$

or $1.0m < x < 6.0m$ $\quad V_x = -10 + R_B - w(x-1.0)$

$$= -10 + 24.5 - 5(x-1.0)$$

$$= (-5x + 19.5)kN$$

t $x = 1.0m$, $\quad V_{x=1.0} = -5\times 1.0 + 19.5 = 14.5kN$

o find the location of zero shear,

$$V_x = 0 = -5x + 19.5$$

or; $x = 3.9m$

t $x = 6m$, $\quad V_{x=6} = -5\times 6 + 19.5 = -10.5kN$

o find the equations of bending moment,

or $0 < x < 1.0m$ $\quad M_x = -10xkNm$

t $x = 1.0m$, $\quad M_{x=1.0} = -10kNm$

or $1.0m < x < 6m$ $\quad M_x = -10x + R_B(x-1.0) - \frac{w}{2}(x-1.0)(x-1.0)$

$$= -10x + 245(x-1.0) - \frac{5}{2}(x-1.0)^2$$

$$= (-2.5x^2 + 19.5x - 27)kNm$$

At $x = 3.9m$, $M_{x=3.9} = -2.5\times(3.9)^2 + 19.5\times 3.9 - 27 = 11.025kNm$

To find the location of zero bending moment (inflection point)

$$M_x = 0 = -2.5x^2 + 19.5x - 27$$

$$\text{or, } x = \frac{-19.5 \pm \sqrt{19.5^2 - 4(-2.5)(-27)}}{2\times(-2.5)}$$

$$\text{or, } x = 1.8m$$

Shear force and bending moment diagrams are drawn as follows.

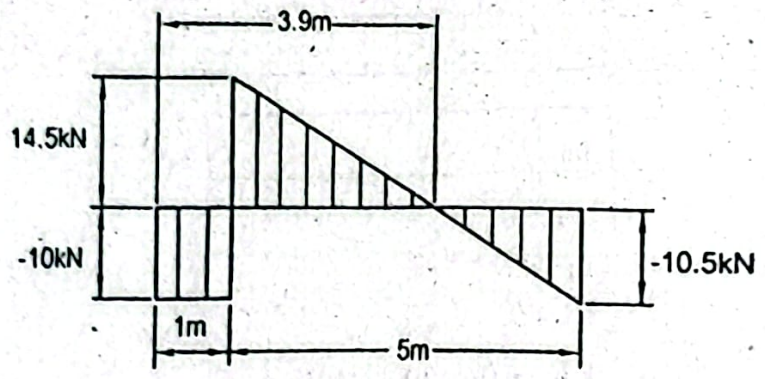

Shear force diagram

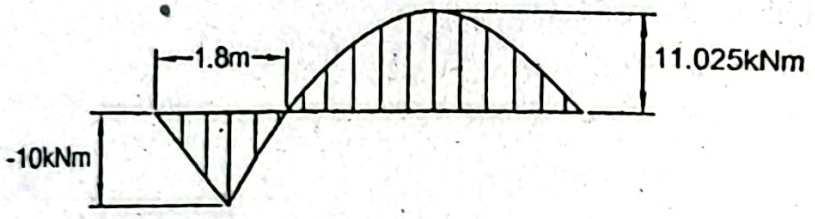

Bending moment diagram

Problem P3.45:

Determine the equations of shear force and bending moment for an overhanging b subjected to a concentrated load at its free end and a uniformly load placed symmetric between the supports as shown in Figure P3.45. Draw also the shear force and ben moment diagrams.

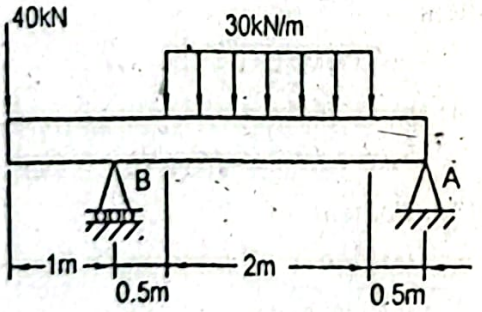

Figure P3.45

Given Data:

Length of beam, $L = 4m$

Concentrated load, $P = 40kN$

Distributed load, $w = 30kN/m$

To Find:

- Equations of shear force and bending moment
- Shear force and bending moment diagrams

Solution:

Free body diagram of the entire beam is given in the figure below.

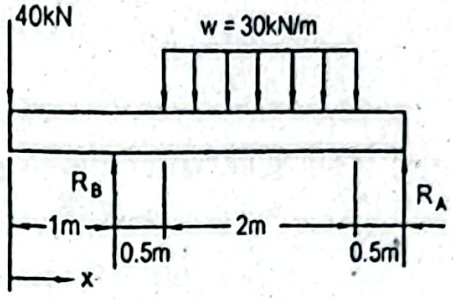

n static equilibrium condition,

$$+\uparrow \sum F_y = 0$$

or, $R_A + R_B - 40 - w\times 2 = 0$

or, $R_A + R_B = 40 + 30\times 2 = 100$

aking moment about A, $+\circlearrowleft \sum M_A = 0$

or, $40\times 4 - R_B \times 3 + w\times 2\times 1.5 = 0$

or, $160 - 3R_B + 30\times 2\times 1.5 = 0$

or, $R_B = 83.33kN$

herefore, $R_A = 100 - R_B = 100 - 83.33 = 10.67kN$

o determine the equations of shear force,

or $0 < x < 1.0m$ $\quad V_x = -40kN$

or $1.0m < x < 1.5m$ $\quad V_x = -40 + R_B$

$= -40 + 83.33 = 43.33kN$

or $1.5m < x < 3.5m$ $\quad V_x = -40 + R_B - w(x - 1.5)$

$= -40 + 83.33 - 30(x - 1.5)$

$= (-30x + 88.33)kN$

o find the location of zero shear,

$V_x = 0 = -30x + 88.33$

or, $x = 2.94m$

r $3.5m < x < 4.5m$ $\quad V_x = -40 + R_B - w\times 2$

$= -40 + 83.33 - 30\times 2$

$= -16.67kN$

find the equations of bending moment,

r $0 < x < 1.0m$ $\quad M_x = -40xkNm$

$x = 1.0m$, $\quad M_{x=1.0} = -40\times 1.0 = -40kNm$

r $1.0m < x < 1.5m$ $\quad M_x = -40x + R_B(x - 1.0)$

$= -40x + 83.33(x - 1.0)$

$= (43.33x - 83.33)kNm$

At $x = 1.5m$, $M_{x=1.5} = 43.33 \times 1.5 - 83.33 = -18.34kNm$

For $1.5m < x < 3.5m$ $M_x = -40x + R_B(x - 1.0) - \frac{w}{2}(x - 1.5)(x - 1.5)$

$= -40x + 83.33(x - 1.0) - \frac{30}{2}(x - 1.5)^2$

$= (-15x^2 + 88.33x - 117.08)kNm$

At $x = 2.94m$, $M_{x=2.94} = -15 \times (2.94)^2 + 88.33 \times 2.94 - 117.08 = 12.9$

To find the location of zero bending moment (inflection point)

$M_x = 0 = -15x^2 + 88.33x - 117.08$

or, $x = \frac{-88.33 \pm \sqrt{88.33^2 - 4(-15)(-117.08)}}{2 \times (-15)}$

or, $x = 2.02m$

At $x = 3.5m$, $M_{x=3.5} = -15 \times (3.5)^2 + 88.33 \times 3.5 - 117.08 = 8.33kNm$

For $0 < x' < 0.5m$ $M_{x'} = R_A x'$

$= 16.67x'kNm$

At $x' = 0.5m$, $M_{x'=0.5} = 16.67 \times 0.5kNm = 8.33kNm$

Shear force and bending moment diagrams are drawn as follows.

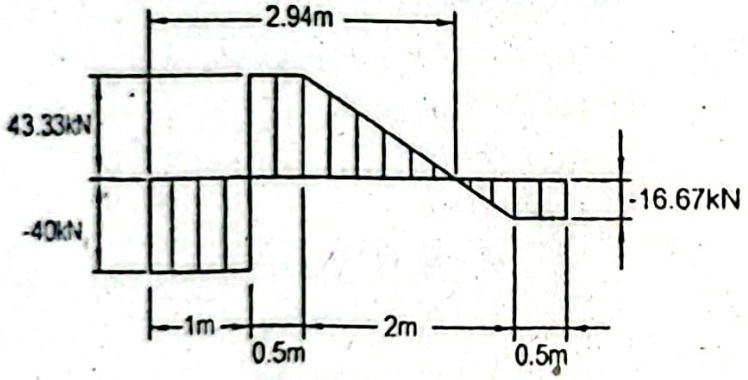

Shear force diagram

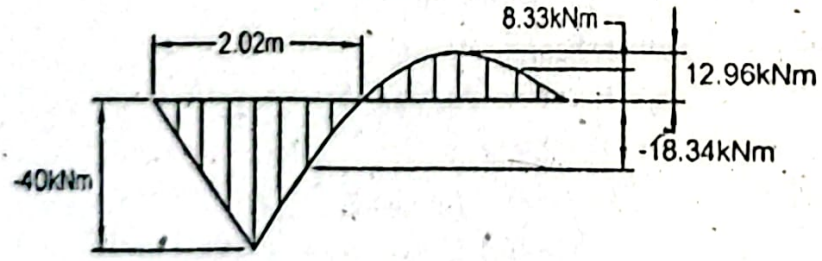

Bending moment diagram

Problem P3.46:

Write the equations of shear force and bending moment for a two span continuous carrying a concentrated load and a uniformly distributed load as shown in Figure The middle support at B creates a reaction of $15kN$ upward. Draw also the shear and bending moment diagrams.

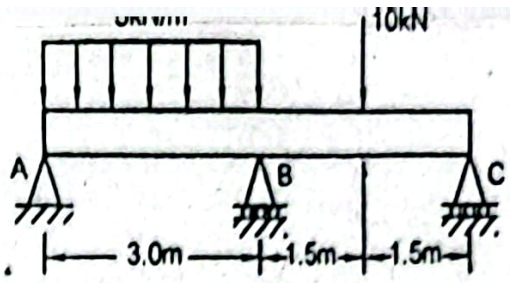

Figure P3.46

Given Data:

Length of beam, $L = 6m$

Concentrated load, $P = 10kN$

Distributed load, $w = 5kN/m$

Middle reaction, $R_B = 15kN \uparrow$

To Find:

- Equations of shear force and bending moment
- Shear force and bending moment diagrams

Solution:

Free body diagram of the entire beam is given in the figure below.

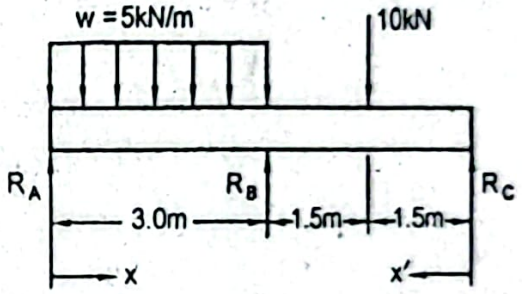

In static equilibrium condition,

$$+\uparrow \sum F_y = 0$$

or, $R_A + R_B + R_C - 10 - w \times 3 = 0$

or, $R_A + R_C = 10 + 5 \times 3 - 15 = 10$

Taking moment about A, $+\circlearrowleft \sum M_A = 0$

or, $R_C \times 6 - 10 \times 4.5 + R_B \times 3 - w \times 3 \times 1.5 = 0$

or, $R_C \times 6 - 10 \times 4.5 + 15 \times 3 - 5 \times 3 \times 1.5 = 0$

or, $R_C = 3.75kN$

Therefore, $R_A = 10 - R_C = 10 - 3.75 = 6.25kN$

To determine the equations of shear force,

For $0 < x < 3m$ $\quad V_x = R_A - wx$

$= (6.25 - 5x)kN$

To find the location of zero shear,

$V_x = 0 = 6.25 - 5x$

or, $x = 1.25m$

At $x = 3m$, $\quad V_{x=3} = 6.25 - 5 \times 3 = -8.75kN$

For $3m < x < 4.5m$ $V_x = R_A - w\times 3 + R_B$

$= 6.25 - 5\times 3 + 15 = 6.25kN$

For $4.5m < x < 6m$ $V_x = R_A - w\times 3 + R_B - 10$

$= 6.25 - 5\times 3 + 15 - 10 = -3.75kN$

To find the equations of bending moment,

For $0 < x < 3m$ $M_x = R_A x - \frac{wx^2}{2}$

$= 6.25x - \frac{5x^2}{2} = (6.25x - 2.5x^2)\,kNm$

To find the location of zero bending moment (inflection point),

$M_x = 0 = 6.25x - 2.5x^2$

or, $x = 2.5m$

At $x = 1.25m$, $M_{x=1.25} = 6.25\times 1.25 - 2.5(1.25)^2 = 3.906kNm$

At $x = 3m$, $M_{x=3} = 6.25\times 3 - 2.5(3.0)^2 = -3.75kNm$

For $0 < x' < 1.5m$ $M_{x'} = R_C x'$

$= 3.75x'\ kNm$

At $x' = 1.5m$, $M_{x'=1.5} = 3.75\times 1.5kNm = 5.625kNm$

For $1.5 < x' < 3m$ $M_{x'} = R_C x' - 10(x' - 1.5)$

$= 3.75x' - 10x' + 15 = (-6.25x' + 15)\,kNm$

To find the location of zero bending moment,

$M_{x'} = 0 = -6.25x' + 15$

or, $x' = 2.4m$

Shear force and bending moment diagrams are drawn as follows.

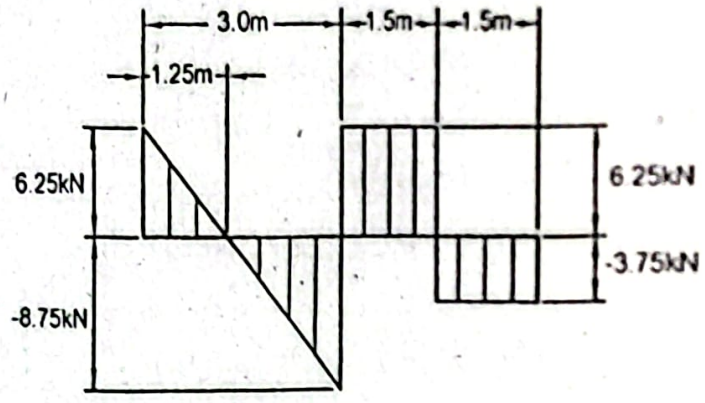

Shear force diagram

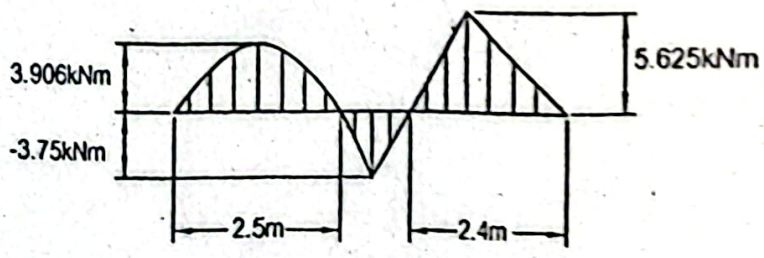

Bending moment diagram

oblem P3.47:

rite the equations of shear force and bending moment for a cantilever beam carrying a ncentrated load of $25kN$ at its free end and a couple of $75kNm$ as shown in Figure .47. Draw also the shear force and bending moment diagrams.

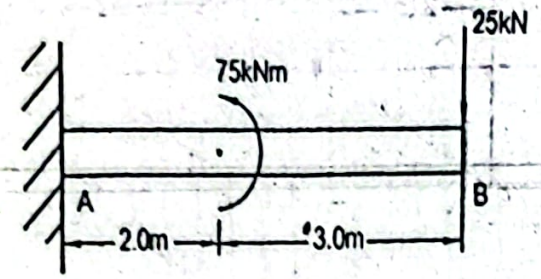

Figure P3.47

ven Data:

ngth of beam, $L = 5m$

ncentrated load, $P = 25kN$

uple, $M = 75kNm$

Find:

quations of shear force and bending moment

hear force and bending moment diagrams

lution:

e body diagram of the entire beam is shown below.

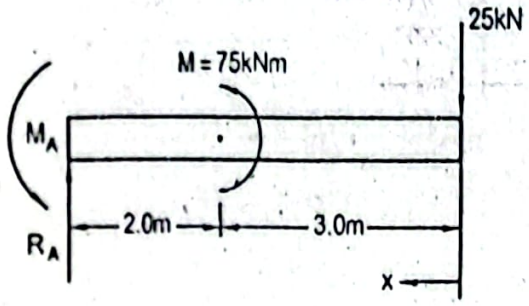

static equilibrium condition, $+\uparrow \sum F_y = 0$

or, $R_A - 25 = 0$

or, $R_A = 25kN$

determine the equation of shear force,

r $0 < x < 5m$ $V_x = 25kN$

w to find the equations of bending moment,

r $0 < x < 3m$ $M_x = -25x\ kNm$

$x = 3m$, $M_{x=3} = -25 \times 30kNm = -75kNm$

r $3m < x < 5m$ $M_x = -25x + M$

$= (-25x + 75)kNm$

$x = 3m$, $M_{x=3} = -25 \times 3 + 75 = 0.0kNm$

$x = 5m$, $M_{x=5} = -25 \times 5 + 75 = -50kNm$

ear force and bending moment diagrams are drawn as follows.

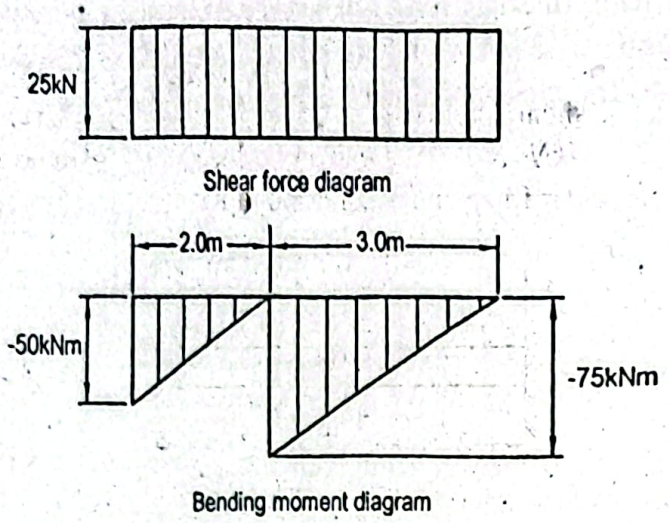

Problem P3.48:

Write the equations of shear force and bending moment for an overhanging be subjected to two equal concentrated loads at the free ends and a couple as shown Figure P3.48. Draw also the shear force and bending moment diagrams.

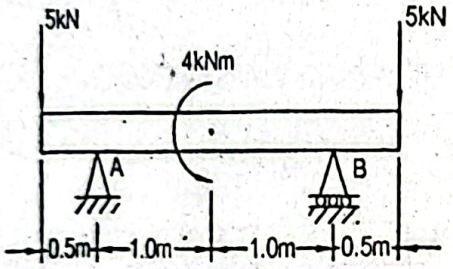

Figure P3.48

Given Data:

Length of beam, $L = 3m$

Each concentrated load, $P = 5kN$

Couple, $M = 4kNm$

To Find:

- Equations of shear force and bending moment
- Shear force and bending moment diagrams

Solution:

Free body diagram of the entire beam is given below.

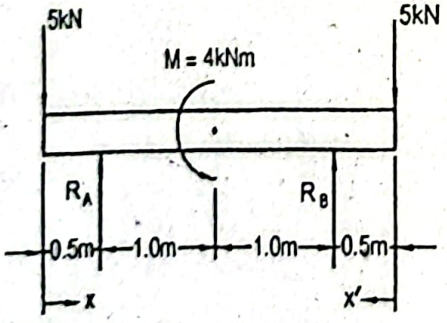

In static equilibrium condition,

$$+\uparrow \sum F_y = 0$$

or, $R_A + R_B - 5 - 5 = 0$

or, $R_A + R_B = 10$

king moment about A, $+\circlearrowleft \sum M_A = 0$

or, $5 \times 0.5 + R_B \times 2 - 5 \times 2.5 + M = 0$

or, $5 \times 0.5 + R_B + 30 \times 2 - 5 \times 2.5 + 40 = 0$

or, $R_B = 3kN$

herefore, $R_A = 10 - R_B = 10 - 3 = 7kN$

o determine the equations of shear force,

or $0 < x < 0.5m$ $V_x = -5kN$

or $0.5m < x < 2.5m$ $V_x = -5 + R_A = -5 + 7 = 2kN$

or $2.5m < x < 3m$ $V_x = -5 + R_A + R_B = -5 + 7 + 3 = 5kN$

o find the equations of bending moment,

or $0 < x < 0.5m$ $M_x = -5xkNm$

t $x = 0.5m$, $M_{x=0.5} = -5 \times 0.5kNm = -2.5kNm$

or $0.5m < x < 1.5m$ $M_x = -5x + R_A(x - 0.5)$

$= -5x + 7(x - 0.5) = (2x - 3.5)kNm$

t $x = 1.5m$, $M_{x=1.5} = 2 \times 1.5 - 3.5 = -0.5kNm$

or $1.5m < x < 2.5m$ $M_x = -5x + R_A(x - 0.5) - M$

$= -5x + 7(x - 0.5) - 4 = (2x - 7.5)kNm$

t $x = 1.5m$, $M_{x=1.5} = 2 \times 1.5 - 7.5 = -4.5kNm$

t $x = 2.5m$, $M_{x=2.5} = 2 \times 2.5 - 7.5 = -2.5kNm$

$M_x = -5x'$

or $2.5m < x < 3m$ $M_x = -5(3 - x)kNm = (5x - 15)kNm$

hear force and bending moment diagrams are drawn as follows.

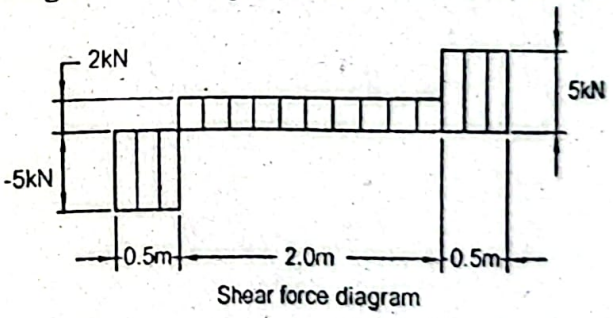

Shear force diagram

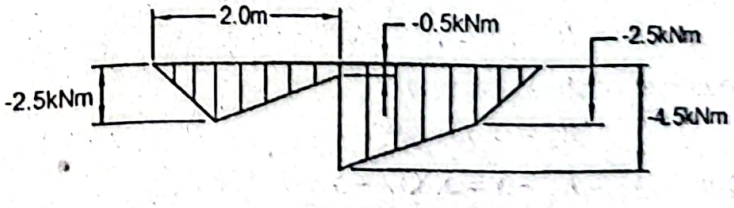

Bending moment diagram

Problem P3.49:

Determine the equations of shear force and bending moment of a simply supported be subjected to two equal concentrated loads of *5kN* and a couple of *3kNm* as show Figure P3.49. Draw also the shear force and bending moment diagrams.

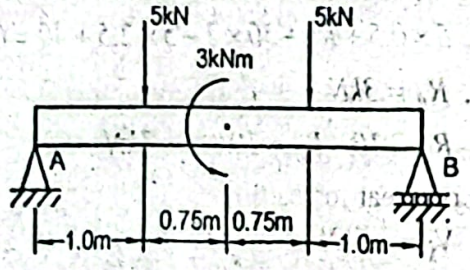

Figure P3.49

Given Data:

Length of beam, $L = 3.5m$

Concentrated load, $P = 5kN$

Couple, $M = 3kNm$

To Find:

- Equations of shear force and bending moment
- Shear force and bending moment diagrams

Solution:

Free body diagram of the entire beam is given below.

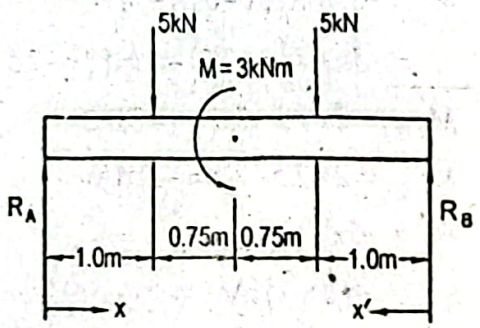

In static equilibrium condition,

$$+\uparrow \sum F_y = 0$$

or, $R_A + R_B - 5 - 5 = 0$

or, $R_A + R_B = 10$

Taking moment about A, $+\circlearrowleft \sum M_A = 0$

or, $R_B \times 3.5 - 5 \times 2.5 + M - 5 \times 1.0 = 0$

or, $R_B \times 3.5 - 5 \times 2.5 + 3 - 5 \times 1.0 = 0$

or, $R_B = 4.143kN$

Therefore, $R_A = 10 - R_B = 10 - 4.143 = 5.857kN$

To determine the equations of shear force,

For $0 < x < 1.0m$ $\quad V_x = R_A = 5.857kN$

For $1.0m < x < 2.5m$ $\quad V_x = R_A - 5 = 5.857 - 5 = 0.857kN$

For $2.5m < x < 3.5m$ $\quad V_x = R_A - 5 - 5 = 5.857 - 10 = -4.143kN$

For $0 < x \leq 1.0m$ $M_x = R_A x\ kNm$

$= 5.857\,kNm.$

At $x = 1.0m$, $M_{x=1.0} = 5.857 \times 1.0\,kNm = 5.857kNm$

For $1.0m < x < 1.75m$ $M_x = R_A x - 5(x - 1.0)$

$= 5.857x - 5x + 5$

$= (0.857x + 5)kNm$

At $x = 1.75m$, $M_{x=1.75} = 0.857 \times 1.75 + 5 = 6.5kNm$

For $1.75m < x < 2.5m$ $M_x = R_A x - 5(x - 1.0) - M$

$= 5.857x - 5x + 5 - 3$

$= (0.857x + 2)kNm$

At $x = 1.75m$, $M_{x=1.75} = 0.857 \times 7.75 + 2 = 3.5kNm$

At $x = 2.5m$, $M_{x=2.5} = 0.857 \times 2.5 + 2 = 4.143kNm$

$M_{x'} = R_B x' - 4.143x'$

For $2.5m < x < 3.5m$ $M_x = 4.143(3.5 - x)$

$= (14.5 - 4.143x)kNm$

Shear force and bending moment diagrams are drawn as follows.

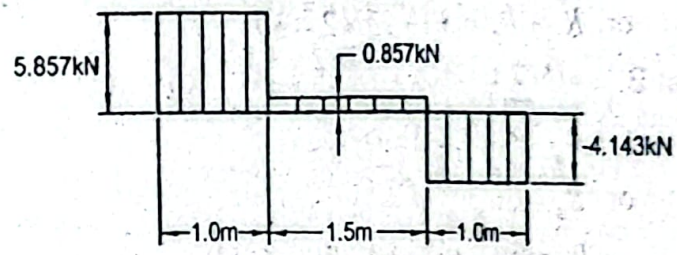

Shear force diagram

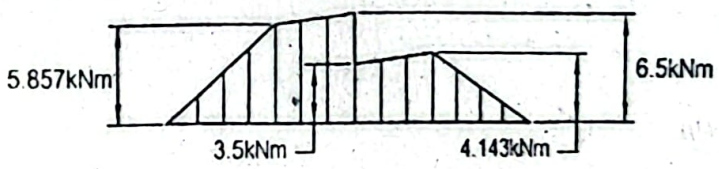

Bending moment diagram

Problem P3.50:

Determine the equations of shear force and bending moment of an overhanging beam subjected to a concentrated load of $30kN$ and a uniformly distributed of $25kN/m$ as shown in Figure P3.50. Draw also the shear force and bending moment diagrams.

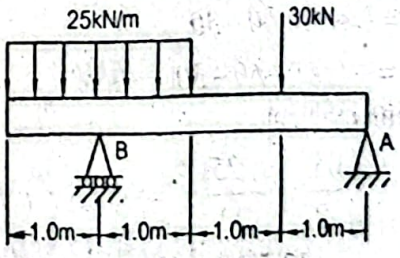

Figure P3.50

Given Data:

Length of beam, $L = 4m$

Concentrated load, $P = 30kN$

Distributed load, $w = 25kN/m$

To Find:

- Equations of shear force and bending moment
- Shear force and bending moment diagrams

Solution:

Free body diagram of the entire beam is shown below.

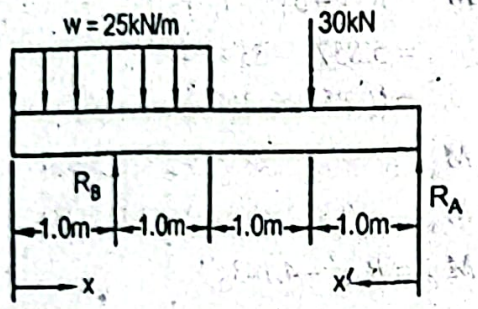

In static equilibrium condition,

$$+\uparrow \sum F_y = 0$$

or, $R_A + R_B - 30 - w \times 2 = 0$

or, $R_A + R_B = 30 + 25 \times 2 = 80$

Taking moment about B, $+\circlearrowleft \sum M_B = 0$

or, $R_A \times 3 - 30 \times 2 = 0$

or, $R_A = 20kN$

Therefore, $R_B = 80 - R_A = 80 - 20 = 60kN$

To determine the equations of shear force,

For $0 < x < 1.0m$ $\quad V_x = -wx = -25x\,kN$

At $x = 1.0m$, $\quad V_{x=1.0} = -25 \times 1.0 = -25kN$

For $1.0m < x < 2.0m$ $\quad V_x = -wx + R_B$

$$= (-25x + 60)\,kN$$

At $x = 1.0m$, $\quad V_{x=1.0} = -25 \times 1.0 + 60.0 = 35kN$

At $x = 2.0m$, $\quad V_{x=2.0} = -25 \times 2.0 + 60.0 = 10kN$

For $2m < x < 3m$ $\quad V_x = -w \times 2 + R_B$

$$= -25 \times 2 + 60 = 10kN$$

For $3m < x < 4m$ $\quad V_x = -w \times 2 + 60 - 30$

$$= -25 \times 2 + 60 - 30 = -20kN$$

To find the equations of bending moment,

For $0 < x < 1.0m$ $\quad M_x = -\frac{wx^2}{2} = -\frac{25}{2}x^2 = -12.5x^2\,kNm$

At $x = 1.0m$, $\quad M_{x=1.0} = -12.5 \times 1.0^2\,kNm = -12.5kNm$

For $1.0m < x < 2.0m$ $\quad M_x = -\dfrac{wx^2}{2} + R_B(x-1.0)$

$$= -\frac{25}{2}x^2 + 60(x-1.0)$$

$$= (-12.5x^2 + 60x - 60)\,kNm$$

To find the location of zero bending moment (inflection point)

$$M_x = 0 = -12.5x^2 + 60x - 60$$

$$x = \frac{-60 \pm \sqrt{60^2 - 4(-12.5)\times(-60)}}{2\times(-12.5)}$$

$$= 1.42m$$

At $x = 2.0m$, $\quad M_{x=2.0} = -12.5\times 2^2 + 60\times 2 - 60 = 10kNm$

For $0 < x' < 1.0m$ $\quad M_{x'} = R_A x' = 20x'kNm$

At $x' = 1.0m$, $\quad M_{x'=1} = 20\times 1.0 = 20kNm$

For $1.0m < x' < 2.0m$ $\quad M_{x'} = R_A x' - 30(x'-1)$

$$= 20x' - 30x' + 30$$

$$= (-10x' + 30)\,kNm$$

At $x' = 2.0m$, $\quad M_{x'=2} = -10\times 2.0 + 30 = 10kNm$

Shear force and bending moment diagrams are drawn as follows.

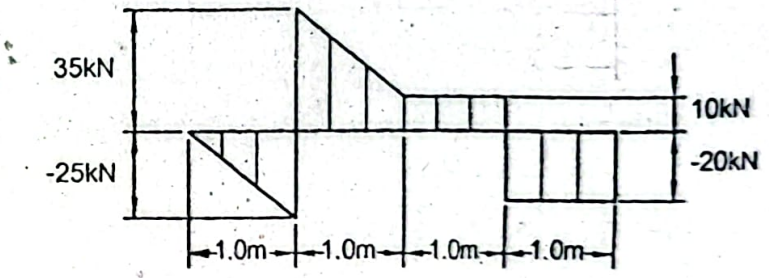

Shear force diagram

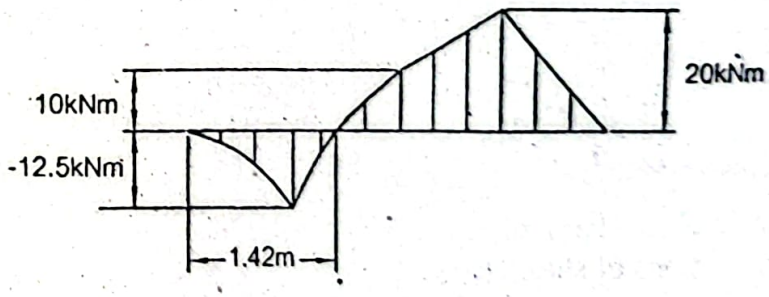

Bending moment diagram

Problem P3.51:

A simply supported beam is subjected to a couple and a concentrated load as shown in Figure P3.51. Write the equations of shear force and bending moment. Draw also the shear force and bending moment diagrams.

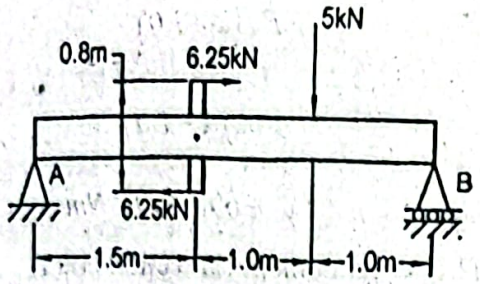

Figure P3.51

Given Data:

Length of beam, $L = 3.5m$

Concentrated load, $P = 5kN$

Couple, $M = 6.25 \times 0.8kNm$

To Find:

- Equations of shear force and bending moment
- Shear force and bending moment diagrams

Solution:

Free body diagram of the entire beam is shown below.

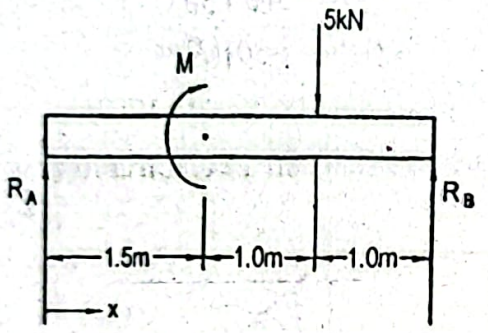

In static equilibrium condition,

$$+\uparrow \sum F_y = 0$$

$$\text{or, } R_A + R_B - 5 = 0$$

$$\text{or, } R_A + R_B = 5$$

Taking moment about A, $+\circlearrowleft \sum M_A = 0$

$$\text{or, } R_B \times 3.5 - 5 \times 2.5 - M = 0$$

$$\text{or, } R_B \times 3.5 - 5 \times 2.5 - 6.25 \times 0.8 = 0$$

$$\text{or, } R_B = 5kN$$

Therefore, $R_A = 5 - R_B = 5 - 5 = 0.0kN$

To determine the equations of shear force,

For $0 < x < 2.5m$ $\quad V_x = R_A = 0.0kN$

For $2.5m < x < 3.5m$ $\quad V_x = R_A - 5 = -5kN$

To find the equations of bending moment,

For $0 < x < 1.5m$ $\quad M_x = R_A x = 0kNm$

For $1.5m < x < 2.5m$ $\quad M_x = R_A x + M = 6.25 \times 0.8 = 5.0kNm$

For $2.5m < x < 3.5m$ $\quad M_x = R_A x + M - 5(x - 2.5)$

$$= 0 + 6.25 \times 0.8 - 5(x - 2.5) = (-5x + 17.5)\,kNm$$

hear force and bending moment diagrams are drawn as follows.

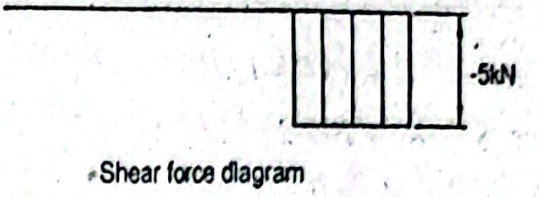

Shear force diagram

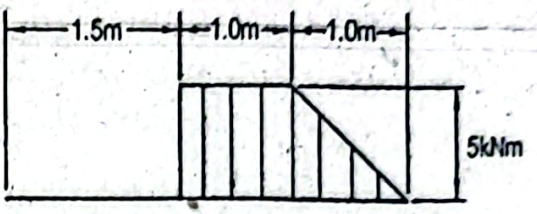

Bending moment diagram

roblem P3.52:

simply supported beam of length *4m* carries a uniformly distributed load of *20kN / m* d a couple as shown in Figure P3.52. Write the equations of shear force and bending oment. Draw also the shear force and bending moment diagrams.

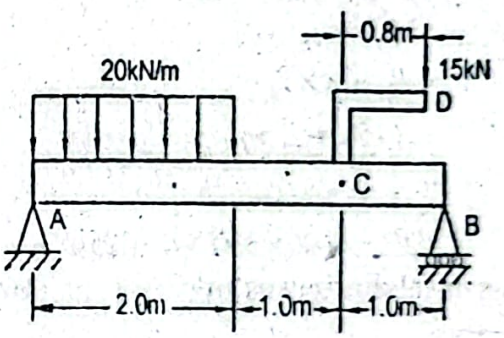

Figure P3.52

iven Data:

ength of beam = *4m*

ncentrated load, $P = 15kN$

stributed load, $w = 20kN / m$

uple, $M = 15 \times 0.8kNm$

Find:

quations of shear force and bending moment

hear force and bending moment diagrams

lution:

ee body diagram of the entire beam is given in the figure below.

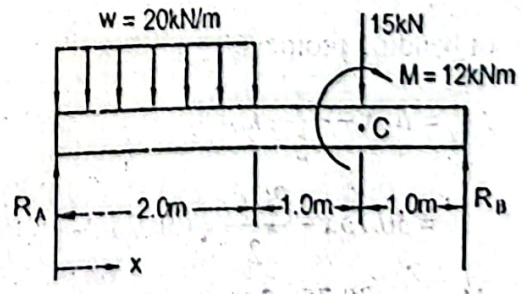

Here $15kN$ load at D is equivalent to $15kN$ load at C and the couple M of $12kNm$.
In static equilibrium condition,

$$+\uparrow \sum F_y = 0$$

or, $R_A + R_B - w\times 2 - 15 = 0$

or, $R_A + R_B = 20\times 2 + 15 = 55$

Taking moment about A, $+\circlearrowleft \sum M_A = 0$

or, $R_B \times 4 - 15\times 3 - 12 - w\times 2\times 1.0 = 0$

or, $R_B \times 4 - 15\times 3 - 12 - 20\times 2\times 1.0 = 0$

or, $R_B = 24.25kN$

Therefore, $R_A = 55 - R_B = 55 - 24.25 = 30.75kN$

To determine the equations of shear force,

For $0 < x < 2.0m$ $V_x = R_A - wx = (30.75 - 20x)kN$

At $x = 2m$, $V_{x=2} = 30.75 - 20\times 2 = -9.25kN$

To locate the point of zero shear,

$V_x = 0 = 30.75 - 20x$

or, $x = 1.538m$

For $2m < x < 3m$ $V_x = R_A - w\times 2$

$= 30.75 - 20\times 2 = -9.25kN$

For $3m < x < 4m$ $V_x = R_A - w\times 2 - 15$

$= 30.75 - 20\times 2 - 15 = 24.25kN$

Shear force and bending moment diagrams are drawn as follows.

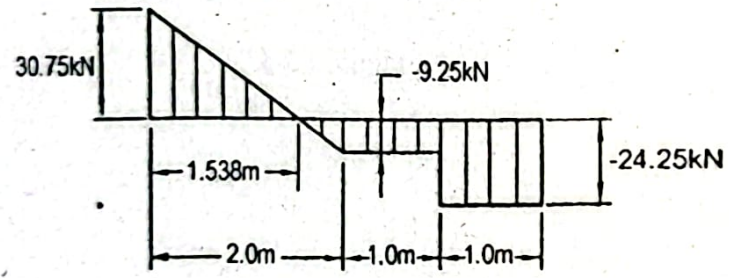

Shear force diagram

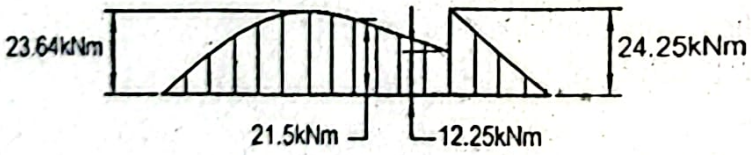

Bending moment diagram

Now to find the equations of bending moment,

For $0 < x < 2.0m$ $M_x = R_A x - \frac{wx^2}{2} kNm$

$= 30.75x - \frac{20x^2}{2} = (30.75x - 10x^2)kNm$

At $x = 2.0m$, $M_{x=2.0} = 30.75\times 2.0 - 10\times 2^2 kNm = 21.5kNm$

At $x = 1.538m$, $M_{x=1.538} = 30.75 \times 1.538 - 10 \times 1.538^2 kNm = 23.64kNm$

For $2.0m < x < 3.0m$ $M_x = 30.75x - w \times 2 \times (x - 1.0)$

$= (-9.25x + 40) kNm$

At $x = 3m$, $M_{x=3} = -9.25 \times 3 + 40 = 12.25kNm$

Problem P3.53:

Determine the equations of shear force and bending moment for an overhanging beam subjected to a uniformly distributed load of $30kN/m$ and a couple of $20kNm$ as shown in Figure P3.53. Draw also the shear force and bending moment diagrams.

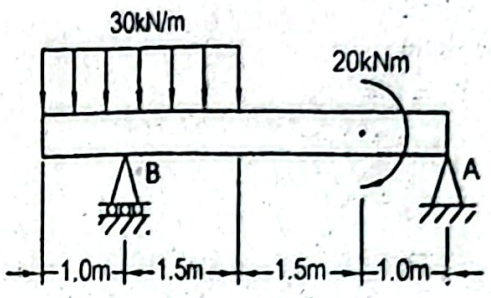

Figure P3.53

Given Data:

Length of beam, $L = 5m$

Distributed load, $w = 30kN/m$

Couple, $M = 20kNm$

To Find:

- Equations of shear force and bending moment
- Shear force and bending moment diagrams

Solution:

Free body diagram of the entire beam is shown below.

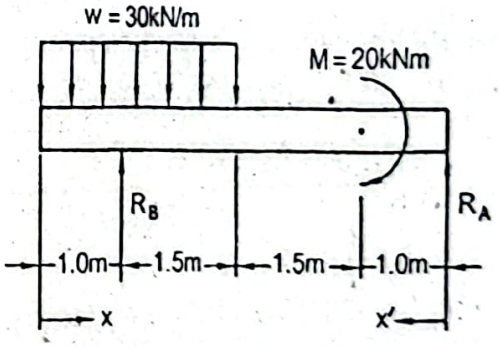

In static equilibrium condition,

$$+\uparrow \sum F_y = 0$$

or, $R_A + R_B - w \times 2.5 = 0$

or, $R_A + R_B = 30 \times 2.5 = 75$

Taking moment about A,

$$+\circlearrowleft \sum M_A = 0$$

or, $-R_B \times 4 + w \times 2.5 \times 3.75 - M = 0$

or, $-R_B \times 4 + 30 \times 2.5 \times 3.75 - 20 = 0$

or, $R_B = 65.313kN$

Therefore, $R_A = 75 - R_B = 75 - 65.313 = 9.687kN$

To determine the equations of shear force,

For $0 < x < 1.0m$ $V_x = -wx = R_A = -30x\,kN$

At $x = 1.0m$, $V_{x=1.0} = -30 \times 1.0 = -30kN$

For $1.0m < x < 2.5m$ $V_x = -wx + R_B$

$= (-30x + 65.313)kN$

At $x = 1.0m$, $V_{x=1.0} = -30 \times 1.0 + 65.313 = 35.313kN$

To find the location of zero shear,

$V_x = 0 = -30x + 65.313$

or, $x = 2.177m$

At $x = 2.5m$, $V_{x=2.5} = -30 \times 2.5 + 65.313 = -9.687kN$

For $2.5m < x < 5m$ $V_x = -w \times 2.5 + R_B$

$= -30 \times 2.5 + 65.313 = -9.687kN$

To find the equations of bending moment,

For $0 < x < 1.0m$ $M_x = -\frac{wx^2}{2} = -\frac{30}{2}x^2 = -15x^2\,kNm$

At $x = 1.0m$, $M_{x=1.0} = -15 \times 1.0^2\,kNm = -15kNm$

For $1.0m < x < 2.5m$ $M_x = -\frac{wx^2}{2} + R_B(x - 1.0)$

$= -\frac{30}{2}x^2 + 65.313(x - 1.0)$

$= (-15x^2 + 65.313x - 65.313)kNm$

To find the location of zero bending moment (inflection point)

$M_x = 0 = -15x^2 + 65.313x - 65.313$

$x = \frac{-65.313 \pm \sqrt{65.313^2 - 4(-15) \times (-65.313)}}{2 \times (-15)}$

$= 1.556m$

At $x = 2.177m$, $M_{x=2.177} = -15 \times 2.177^2 + 65.313 \times 2.177 - 65.313 = 5.783kNm$

At $x = 2.5m$, $M_{x=2.5} = -15 \times 2.5^2 + 65.313 \times 2.5 - 65.313 = 4.22kNm$

For $4m < x < 5m$ $M_{x'} = R_A x' = 9.687x'$

$M_x = 9.687(5 - x)kNm$

At $x = 4m$, $M_{x=4} = -9.687(5.0 - 4.0) = 9.687kNm$

For $2.5m < x < 4.0m$ $M_{x'} = R_A x' - M = 9.687x' - 20$

or, $M_x = 9.687(5 - x) - 20 = (-9.687x + 28.435)kNm$

At $x = 4.0m$, $M_{x=4.0} = -9.687 \times 4 + 28.435 = -10.313kNm$

To find the location of zero bending moment (inflection point),

$$M_x = 0 = -9.687x + 28.435$$

or, $x = 2.935m$

Shear force and bending moment diagrams are drawn as follows.

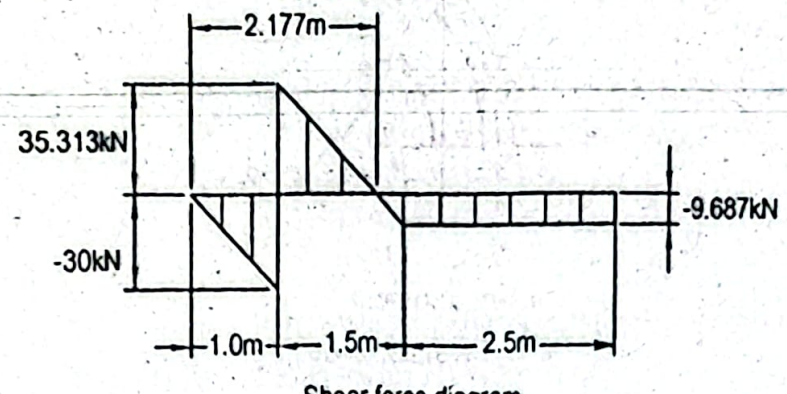

Shear force diagram

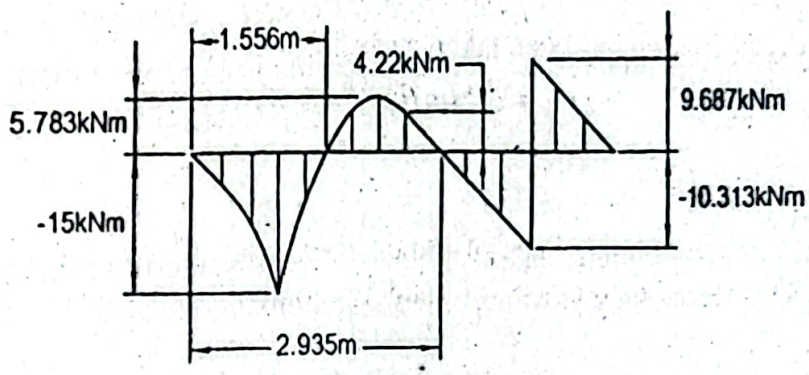

Bending moment diagram

Problem P3.54:

A curved beam of semi-circular shape of radius R is fixed at one end and loaded by two forces P and Q at its free end as shown in Figure P3.54. Determine the equations of bending moment, shear force and axial force at any section a-a.

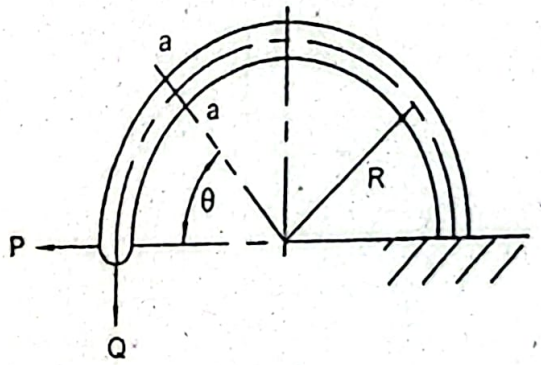

Figure P3.54

Given Data:

Radius of beam $= R$

Loads $= P$ and Q

To Find:

Equation of bending moment, M

Equation of shear force, V

- Equation of axial force, F_x

Solution:

Free body diagram of a section of the curved beam is shown below.

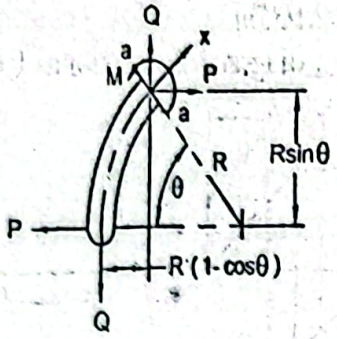

From the free body diagram, the resisting moment,

$$M = PR\sin\theta - QR(1-\cos\theta) + \text{C} \quad \textit{Answer}$$

Shear force, $V = +(P\cos\theta - Q\sin\theta)$ *Answer*

Positive shear force equation has been taken according to the convention.

Axial force, $F_x = (P\sin\theta + Q\cos\theta)$ *Answer*

Problem P3.55:

A curved beam of semi-circular shape of radius R is subjected to a load P as shown in Figure P3.55. Determine the equations of bending moment, shear force and axial force at any section a-a.

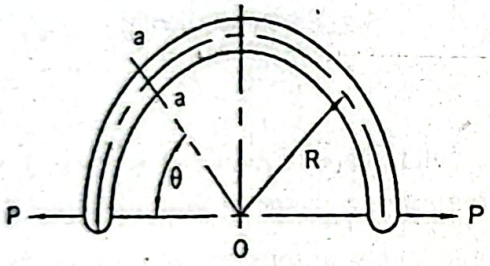

Figure P3.55

Given Data:

Radius of beam $= R$

Load $= P$

To Find:

- Equation of bending moment, M
- Equation of shear force, V
- Equation of axial force, F_x

Solution:

Free body diagram of a section of the curved beam is given as follows.

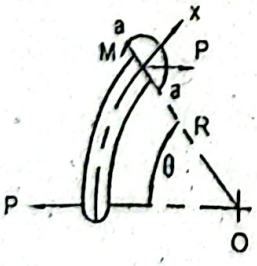

At the sectio... ... moment, $M = PR\sin\theta + C$ *Answer*

Shear force, $V = +P\cos\theta$ *Answer*

According to the convention shear force is positive here.

Axial force occurs along the x-axis.

Axial force, $F_x = P\sin\theta$ *Answer*

Problem P3.56:

Write the equations of shear force and bending moment for a curved beam of semi-circular shape of radius R, subjected to a vertical load P as shown in Figure P3.56. Draw also the shear force and bending moment with respect to θ.

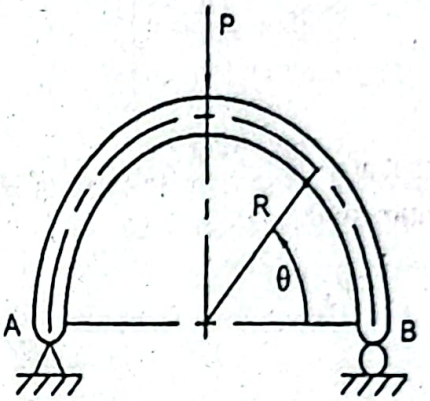

Figure P3.56

Given Data:

Radius of beam $= R$

Vertical load $= P$

To Find:

Equation of shear force and bending moment

Shear force and bending moment diagrams

Solution:

Free body diagram of the entire beam is shown below.

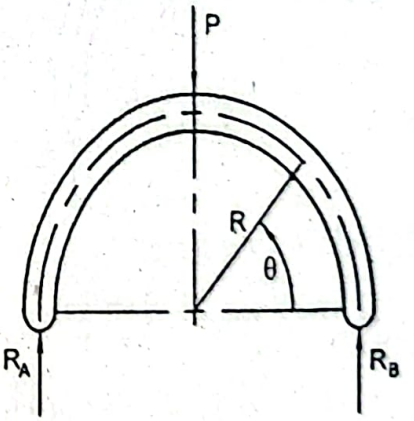

In static equilibrium condition,

$$+C\sum M_A = 0$$

$$\text{or, } R_B \times 2R - P \times R = 0$$

$$\text{or, } R_B = \frac{P}{2}$$

$$+\uparrow \sum F_y = 0$$

$$\text{or, } R_A + R_B = P$$

$$\text{or, } R_A = P - R_B = P - \frac{P}{2} = \frac{P}{2}$$

Now a section of the beam is taken as a free body in the figure below..

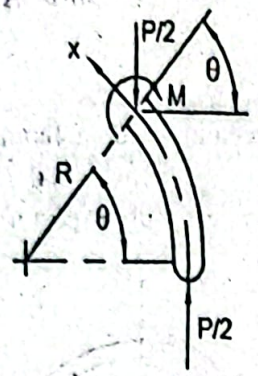

Here M is the resisting moment at a section at an angle of θ.

According to the sign convention of the shear force,

For $0 < \theta < \frac{\pi}{2}$ $\qquad V_\theta = \frac{P}{2}\sin\theta$

Resisting moment,

For $0 < \theta < \frac{\pi}{2}$ $\qquad M_\theta = \frac{P}{2}(R - R\cos\theta)$

$$= \frac{PR}{2}(1 - \cos\theta)$$

Again a section of the beam is taken as a free body in the figure below.

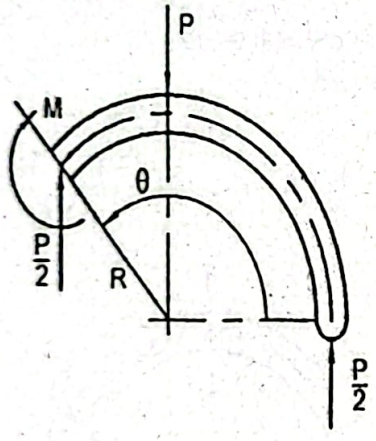

According to the sign convention of the shear force,

For $\frac{\pi}{2} < \theta < \pi$ $\qquad V_\theta = \frac{P}{2}\sin\theta$

Resisting moment, $\qquad M_\theta = \frac{P}{2}\left[R + R\cos(\pi - \theta)\right] - PR\cos(\pi - \theta)$

$$= \frac{PR}{2}(1 - \cos\theta) + PR\cos\theta$$

$$= \frac{PR}{2}(1 + \cos\theta)$$

Shear force and bending moment diagrams are drawn as follows.

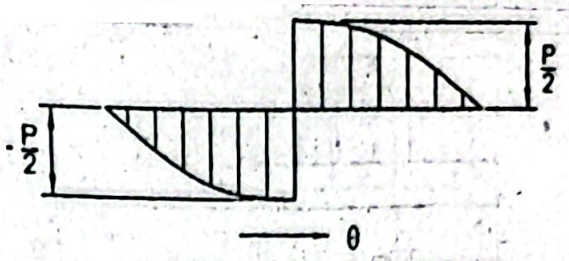

Shear force diagram

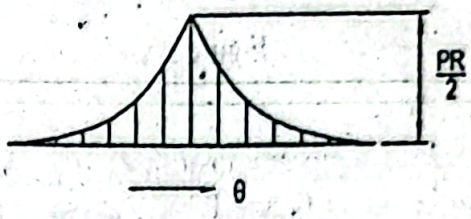

Bending moment diagram

EXERCISES

Problem E3.1:

Determine the equations of shear force and bending moment for a simply supported beam with a concentrated load at the mid point B as shown in Figure E3.1. Draw also the shear force and bending moment diagrams.

Ans.: $V_{max} = 12.5kN;\ M_{max} = 31.25kNm$

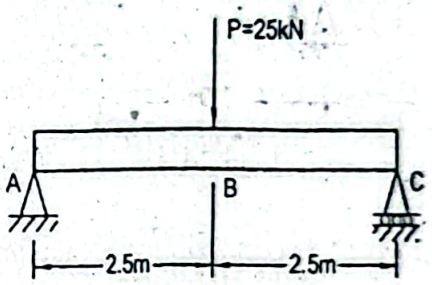

Figure E3.1

Problem E3.2:

Determine equations of shear force and bending moment of a cantilever beam subjected to a distributed load as shown in Figure E3.2. Draw also the shear force and bending moment diagrams.

Ans.: $V_{max} = -\frac{3}{2}w_0 L;\ M_{max} = -\frac{2}{3}w_0 L^2$

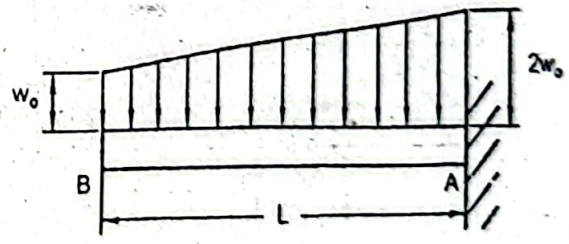

Figure E3.2

Problem E3.3:

A cantilever beam supports a distributed load and two concentrated loads as shown in Figure E3.3. Write equations of shear force and bending moment. Draw also the shear force and bending moment diagrams

Ans.: $V_{max} = 22kN;\ M_{max} = -36kNm$

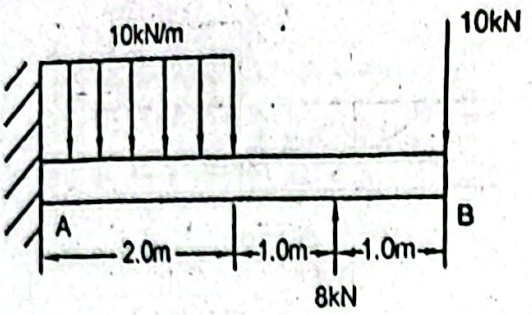

Figure E3.3

Problem E3.4:

An overhanging beam carries uniformly distributed loads at its ends and a concentra load at its mid point as shown in Figure E3.4. Determine equations of shear force a bending moment. Draw also the shear force and bending moment diagrams.

Ans.: $V_{max} = 20kN$; $M_{max} = 20kNm$; Inflection point at $1.5m$ from e

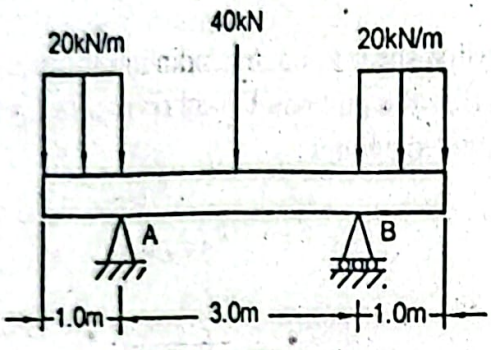

Figure E3.4

Problem E3.5:

An overhanging beam carries concentrated loads as shown in Figure E3.5. Wri equations of shear force and bending moment. Draw also the shear force and bendir moment diagrams.

Ans.: $V_{max} = -47.143kN$; $M_{max} = 28.392kNm$; Inflection points at $1.188m$ and 3.852 from end.

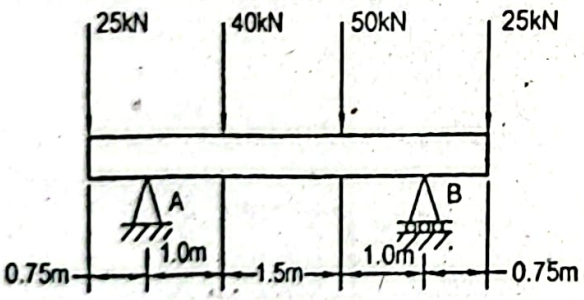

Figure E3.5

Problem E3.6:

A simply supported beam carries a uniformly distributed load of $20kN/m$ and tw concentrated loads, each of $50kN$ as shown in Figure E3.6. Determine equations of shea force and bending moment. Draw also the shear force and bending moment diagrams.

Ans.: $V_{max} = 100kN$; $M_{max} = 137.5kNm$

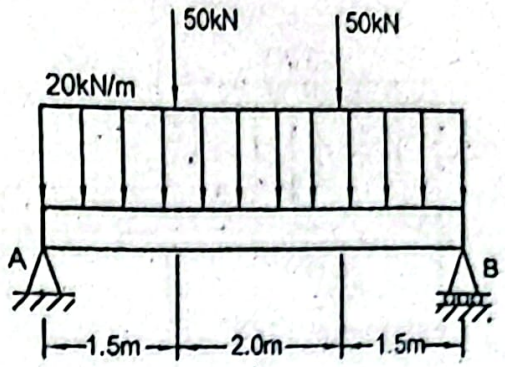

Figure E3.6

Problem E3.7:

Write equations of shear force and bending moment for a simply supported beam subjected to uniformly distributed loads of $25kN/m$ placed symmetrically at both ends and a couple of $10kNm$ at the mid point as shown in Figure E3.7. Draw also the shear force and bending moment diagrams.

Ans.: $V_{max} = -27.5kN;\ M_{max} = 17.5kNm$

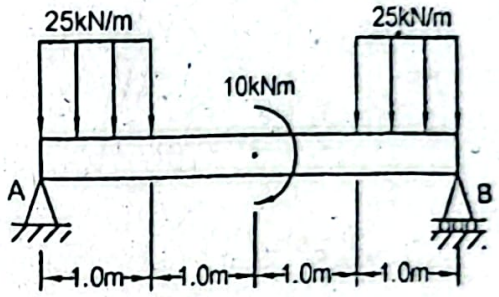

Figure E3.7

Problem E3.8:

Write equations of shear force and bending moment of a cantilever beam subjected to a uniformly distributed load of $15kN/m$ over half of its length and a couple of $40kNm$ as shown in Figure E3.8. Draw also the shear force and bending moment diagrams.

Ans.: $V_{max} = -22.5kN;\ M_{max} = -39.375kNm$

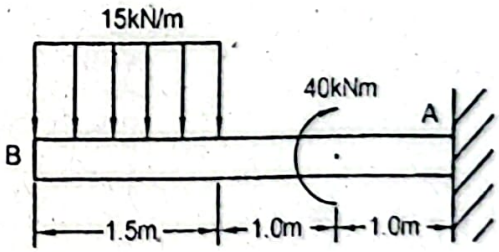

Figure E3.8

Problem E3.9:

Write equations of shear force and bending moment for an overhanging beam subjected to a uniformly distributed load of $30kN/m$ and a concentrated load of $10kN$ as shown in Figure E3.9. Draw also the shear force and bending moment diagrams.

Ans.: $V_{max} = 43.75kN;\ M_{max} = 16.90kNm$; Inflection point occurs at $1.397m$ from end.

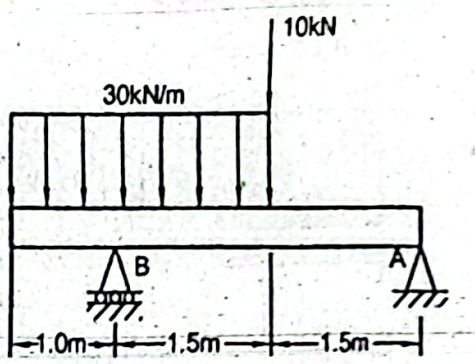

Figure E3.9

Problem E3.10:

Find equations of shear force and bending moment of a curved beam of radius subjected to a concentrated load P at its free end as shown in Figure E 3.10.

Ans.: $V_\theta = -P\sin\theta$; $M_\theta = PR(0.707 + \cos$

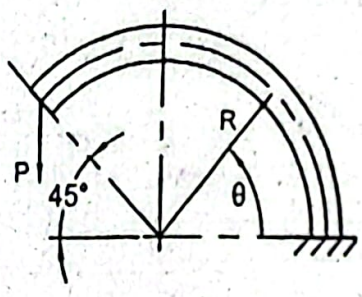

Figure E3.10

Chapter IV

Stresses in Beams

uestion 4.1: Discuss in brief various assumptions which are necessary for derivation flexure formula.

nswer:

derive the flexure formula the following assumptions are made:

a) A beam may consist of an axial force, a shearing force, a bending moment and sometimes torsion also. When a segment of a beam in equilibrium condition consists of bending moment only, it is called *pure bending* or *flexure*. In deriving the flexure formula it is assumed that the beam is subjected to pure bending.

b) To derive the flexure formula it is assumed that the beam is straight with constant cross-section throughout.

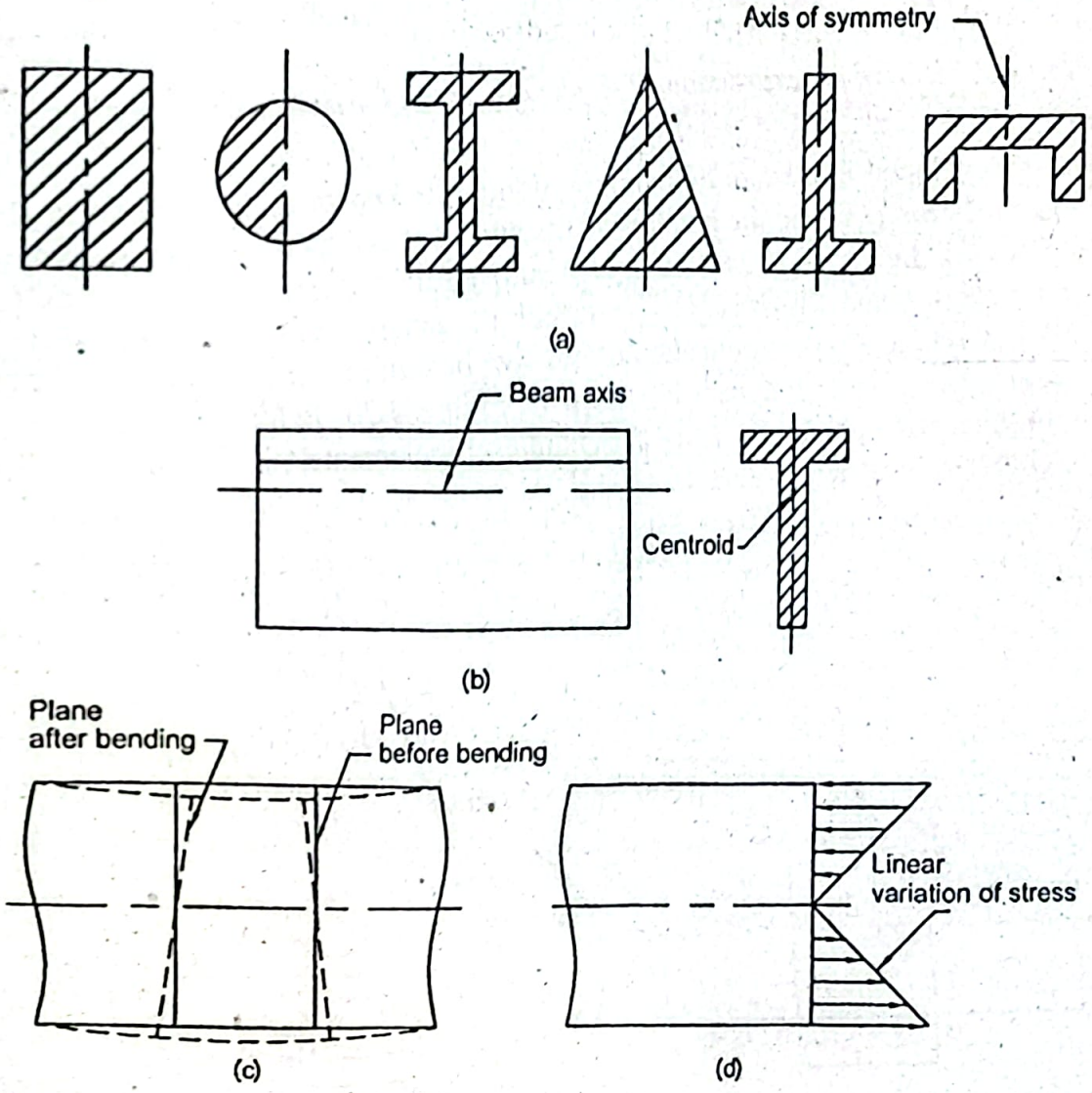

Figure 4.1: (a)Axis of Symmetry; (b) Beam Axis; (c) Plane Section Remains Plane after Bending and (d) Linear Variation of Bending Stress.

c) It is also assumed that the beam has an *axis of symmetry* in the plane of bendi That is, the bending moments lie in a plane containing the axis of symme (Figure 4.1a) and the beam axis (Figure 4.1b). A beam axis passes along the be through the centroid of beam cross-section. The axis of symmetry is conside vertically.

d) Plane sections through a beam normal to its axis remain plane after the beam subjected to bending. Before application of bending moment the planes rema parallel but after application of bending moment, they are no more parallel b remain plane (Figure 4.1c).

e) Material of the beam is homogeneous and each fiber obeys Hook's law, i.e. stre is proportional to strain. In any section of the beam normal stress due to bendir varies linearly with the distance from the neutral axis of the beam (Figure 4.1d).

f) The effect of Poisson and the interference of the adjoining fibers of varyin stresses are neglected.

g) Modulus of elasticity remains equal in tension and compression.

h) Load applied in the beam will be in a direction perpendicular to the beam axis.

Question 4.2: Derive an expression of flexure formula for a straight beam.

Answer:

The stress developed in a beam by bending moment is known as the *bending* or *flexur stress*. The relation between the bending stress and the bending moment is known as th *flexure formula*. In Figure 4.2a a straight beam before bending is shown. This figur shows the axis of beam which is coincident with the neutral plane. As a result there wil be no strain here. Due to the application of positive bending moment the upper surface o beam becomes of concave shape, as shown in Figure 4.2b. Before the application o bending moment two planes *AB* and *CD* separated by elemental distance *ds* are parallel with each other as shown in Figure 4.2a.

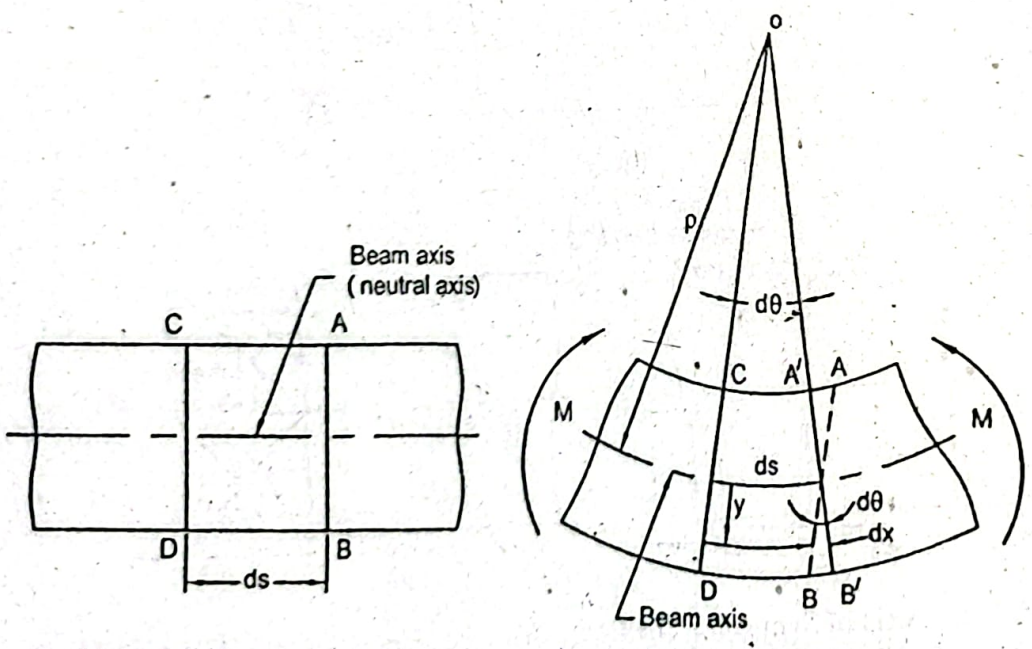

Figure 4.2: A Beam under Positive Bending Moment.

er the application of bending moment AB rotates to the new position $A'B'$ through an le $d\theta$ keeping the position of CD same as the original one. Since the plane section ains plane during bending, AB and $A'B'$ both are straight lines. The length of the erential element along the beam axis (neutral axis) is ds and remains unaltered as e is no strain. Now denoting the radius of curvature of the beam axis by ρ, one can l,

$$ds = \rho d\theta$$

$$\text{or, } \frac{1}{\rho} = \frac{d\theta}{ds} \tag{4.1}$$

rmation of a fiber at a distance y from the neutral axis is,

$$dx = yd\theta \tag{4.2}$$

n is the deformation divided by the original length, therefore,

$$\varepsilon = \frac{dx}{ds} \tag{4.3}$$

1 Equations (4.1), (4.2) and (4.3), the following expression is obtained,

$$\varepsilon = \frac{y}{\rho} \tag{4.4}$$

1 is proportional to the distance y from the neutral axis and since $E = \frac{\sigma}{\varepsilon}$, therefore,

in write,

$$\sigma = \frac{Ey}{\rho} \tag{4.5}$$

the pure bending is considered for the analysis, it means that there will be no axial acting on the beam. As such the summation of all the horizontal forces acting on the section of the beam will be equal to zero. The force acting on an elemental area dA 1; therefore,

$$\int \sigma dA = \frac{E}{\rho} \int ydA = 0 \tag{4.6}$$

ion (4.6) defines the location of the neutral axis. The moment of the area about the l axis is zero and hence, the neutral axis passes through the centroid of the cross-nal area. The moment of the differential area dA about the neutral axis is ydA and is the total moment of area, therefore for E/ρ constant, we obtain,

$$\frac{E}{\rho} A\bar{y} = 0 \tag{4.7}$$

in Equation (4.7), only $\bar{y}$ can be zero, it may be concluded that the distance from utral axis to the centroid of the cross-sectional area must be zero. In other words, utral axis and centroidal axis are coincident.

In the equilibrium condition the internal bending moment due to the stress σ n equal to the external bending moment M. Therefore,

$$M = \int \sigma y dA = \frac{E}{\rho} \int y^2 dA$$

In Equation (4.8) the second integral is the moment of inertia of the area about the Therefore, the area moment of inertia is,

$$I = \int y^2 dA$$

Now from Equations (4.8) and (4.9), the following expression yields,

$$\frac{1}{\rho} = \frac{M}{EI}$$

This Equation (4.10) is important in the determination of deflection of beams. No Equations (4.5) and (4.10), one can find,

$$\sigma = \frac{My}{I}$$

Equation (4.11) shows that bending stress is directly proportional to the distance the neutral axis and the bending moment. The linear distribution of bending st shown in Figure 4.3. Now writing $y = c$ (in reality $c = y_{max}$) the expression maximum bending stress or flexure stress becomes,

$$\sigma = \frac{Mc}{I}$$

Equation (4.12) can also be written in the form,

$$\sigma = \frac{M}{I/c} = \frac{M}{Z}$$

Where, Z = *Section modulus*.

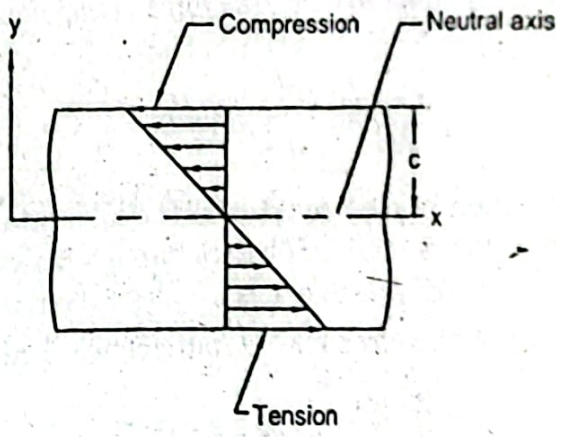

Figure 4.3: Bending Stress in a Beam.

Question 4.3: Derive an expression of shearing stress developed in a straight beam

Answer:

In a beam segment two adjacent sections (a) and (b) at an elemental distance of dx been shown in Figure 4.4a while the cross-section of the beam has been shown in F

4b. The shaded part as shown in the same figure has been considered as the free body. pictorial view of this shaded portion has been shown in Figure 4.4c.

ending moment at section (b) is assumed to be larger than that at section (a), as a result e flexural stress at section (b), σ_b is larger than that at section (a), σ_a. Therefore, the sultant horizontal force due to the compressive stress F_{hb} at section (b) is greater than at F_{ha} at section (a). As a matter of fact in static equilibrium condition a shearing force F must act on the bottom surface of the shaded segment of the free body to balance the fference of F_{hb} and F_{ha}, since there is no other external force acting on this segment on top or side faces.

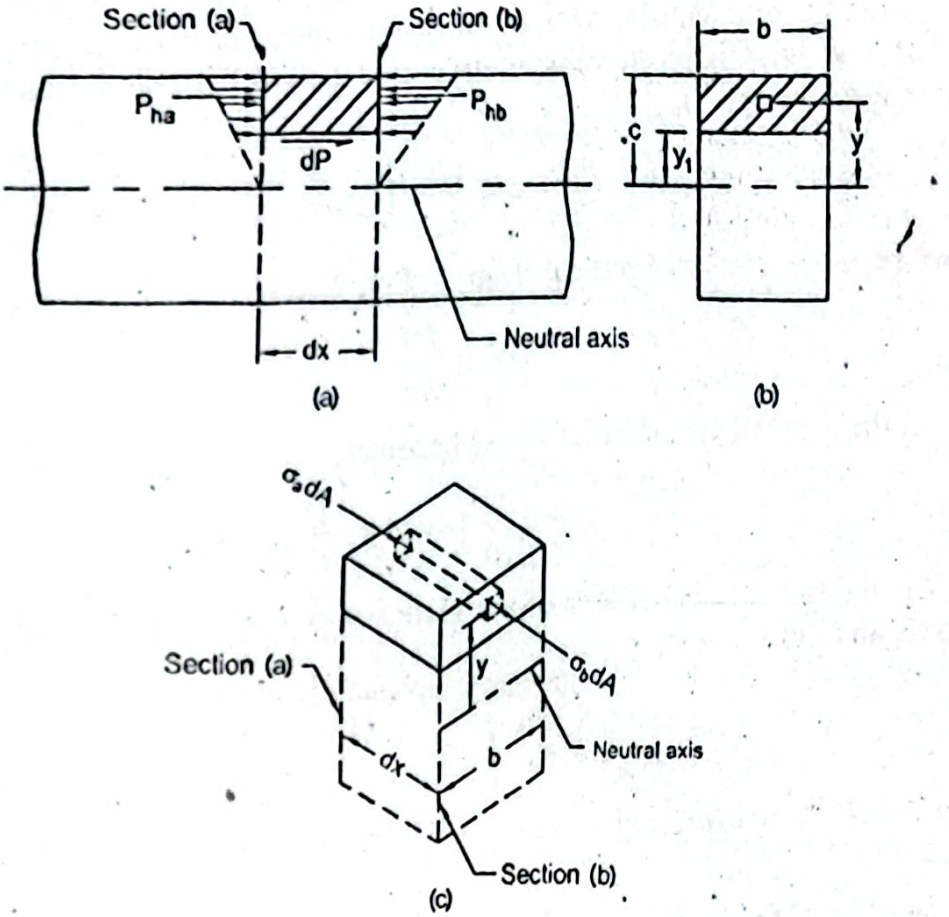

Figure 4.4: Beam Segment under Shearing Stress.

quilibrium condition the summation of the horizontal forces on the shaded segment o. Therefore, one can write,

$$\Sigma P_h = 0$$

$$\text{or, } dP = P_{hb} - P_{ha}$$

$$= \int_{y_1}^{c} \sigma_b dA - \int_{y_1}^{c} \sigma_a dA \qquad (4.14)$$

Compressive stress at section (b) of shaded segment

Compressive stress at section (a) of shaded segment

ross-section area at section (a) or section (b) of shaded segment

Now substituting the value of σ from Equation (4.11), one obtains,

$$dP = \frac{M_b}{I}\int_{y_1} ydA - \frac{M_a}{I}\int_{y_1} ydA$$

$$= \frac{M_b - M_a}{I}\int_{y_1} ydA$$

The expression of the shearing force, dP acting on the bottom surface of th segment as shown in Figure 4.4a, can be found as,

$$dP = \tau b dx$$

where,

τ = Average shearing stress over differential area of width b and length dx

Now writing the differential change in the bending moment dM at the distance to M_b - M_a and substituting the value of dP in Equation (4.15), one finds an expr average shearing stress as,

$$\tau = \frac{dM}{Ibdx}\int_{y_1} ydA$$

Since we have the relation of vertical shear, V from Equation (3.6), as,

$$V = \frac{dM}{dx}$$

Therefore, the expression of shearing stress becomes,

$$\tau = \frac{V}{Ib}\int_{y_1} ydA = \frac{VQ}{Ib}$$

where, Q is the first moment of area of the vertical face of the shaded segment at neutral axis and expressed as,

$$Q = \int_{y_1} ydA$$

Question 4.4: Find an expression of shearing stress for a rectangular beam secti

Answer:

Equation (4.18) will be applied for the beam having rectangular cross-section.

The *first moment of area*, Q is found as,

$$Q = \int_{y_1} ydA = b\int_{y_1} ydy = \frac{b}{2}\left(c^2 - y_1^2\right)$$

Substituting this value in Equation (4.18),

$$\tau = \frac{V}{2I}\left(c^2 - y_1^2\right)$$

We have second moment of area for rectangular cross-section,

$$I = \frac{bh^3}{12}$$

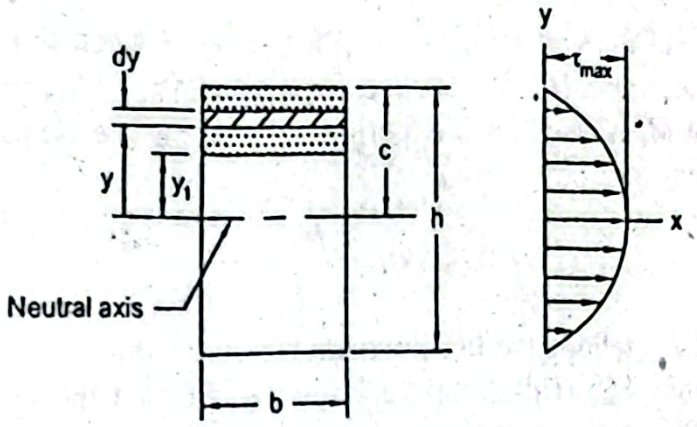

Figure 4.5: Shearing Stress in Rectangular Cross-Section of a Beam.

Now substituting $h = 2c$ and $A = bh = 2bc$, yields,

$$I = \frac{Ac^2}{3}$$

Now putting this value in Equation (4.20) and rearranging, one obtains,

$$\tau = \frac{3V}{2A}\left(1 - \frac{y_1^2}{c^2}\right) \qquad (4.21)$$

From Equation (4.21) it is seen that the maximum shearing stress will occur at $y_1 = 0$,

$$\tau_{max} = \frac{3V}{2A} \qquad (4.22)$$

At $y_1 = c$, shearing stress $\tau = 0$

Shear stress in the beam of rectangular cross-section follows the parabolic distribution, which is seen from Equation (4.21). It can be noted that shear stress is maximum at the neutral axis, where the normal stress due to bending is zero. Shear stress is zero at the outer fiber where the bending stress is maximum. It can be noted here that the horizontal shearing stress is always accompanied by the vertical shearing stress of the same magnitude at any point.

Note:

The maximum shearing stress for a beam of solid circular cross-section is expressed as,

$$\tau_{max} = \frac{4V}{3A} \qquad (4.23)$$

And that for a beam of hollow circular cross-section is expressed as,

$$\tau_{max} = \frac{2V}{A} \qquad (4.24)$$

Question 4.5: Narrate in brief about modulus of rupture in bending.

Answer:

Flexure formula is derived based on the assumption that it follows Hooke's law, that is, this formula is valid up to the proportional limit. But the failure of a member in bending

occurs above the proportional limit and stress is no longer proportional to strain abo this limit, which can be seen from Figure 4.6a.

Under the action of bending moment a member will fail when the bending moment v reach its ultimate value M_u. In practice for a specimen of a given material ultim bending moment M_u is determined experimentally. Using the flexure formula, the va of maximum stress σ_R is obtained as,

$$\sigma_R = \frac{M_u c}{I} \qquad (4.2$$

This Equation (4.25) follows the fictitious linear distribution represented by a dotted lir as shown in Figure 4.6b. This fictitious stress σ_R is called the *modulus of rupture* i *bending* of a given material. In the same figure the actual distribution of bending stress also shown, which is of non-linear nature and σ_u is the actual ultimate stress at which th failure occurs. In this figure also a linear stress distribution up to the proportional limit shown.

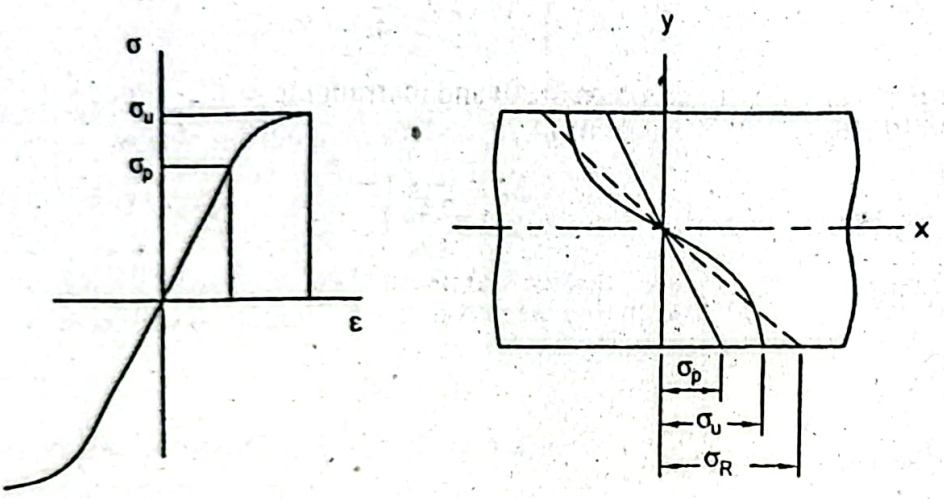

(a) (b)

Figure 4.6: Distribution of Stresses in a Member under Bending.

The value of modulus of rupture as obtained from Equation (4.25) may be used to determine the ultimate bending moment M_u of a member made of the same material and having a cross-section of the same shape but of different dimensions. Both the actual and fictitious stress distributions are supposed to resist the same ultimate bending moment. In the case of the fictitious stress distribution the stress is lower near the neutral axis; its value must be higher near the outer fibers in order to resist the same bending moment, which can be vivid from Equation (4.26) in equilibrium condition.

$$\Sigma M_z = 0: \text{ or, } M = \int_A \sigma y dA \qquad (4.26)$$

SOLVED PROBLEMS

Problem P4.1:
Find an expression of the shearing stress for a beam of circular cross-section.

Given Data:
Cross-section of beam = circular

Find:

xpression of shearing stress

lution:

have an expression of shearing stress from Equation (4.18) as,

$$\tau = \frac{V}{Ib}\int_{y_1} ydA$$

$$= \frac{V}{Ib}\int_{y_1} y2xdy \qquad (i)$$

w for a circular section as shown in the figure below we can write,

$$x^2 + y^2 = r^2$$

$$\text{or, } x = \sqrt{x^2 - y^2}$$

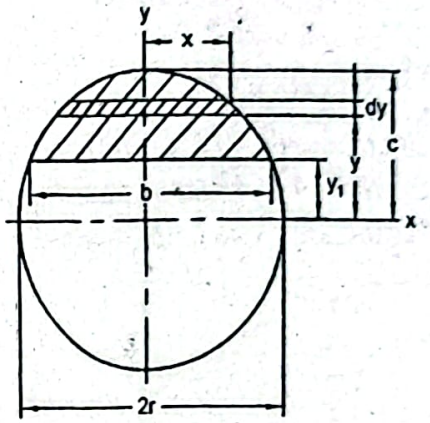

en Equation *(i)* becomes, $\tau = \frac{V}{Ib}\int_{y_1} 2y\sqrt{r^2 - y^2}dy \qquad (ii)$

t $z^2 = r^2 - y^2$

fferentiating, $2zdz = -2ydy$

$$\text{or, } ydz = -zdy$$

bstituting these values in Equation *(ii)*,

$$\tau = -\frac{2V}{Ib}\int_{y_1} z^2 dz$$

$$= -\frac{2V}{Ib}\left[\frac{z^3}{3}\right]_{y_1}^{c}$$

$$= -\frac{2V}{3Ib}\left[\left(r^2 - y^2\right)^{3/2}\right]_{y_1}^{c}$$

placing the upper limit c by r, $\tau = -\frac{2V}{3Ib}\left[\left(r^2 - y^2\right)^{3/2}\right]_{y_1}^{r}$

$$= -\frac{2}{3}\frac{V}{Ib}\left[-\left(r^2 - y_1^2\right)^{3/2}\right]$$

$$= \frac{2}{3}\frac{V}{Ib}\left[\left(r^2 - y_1^2\right)^{3/2}\right] \qquad (iii)$$

Now replacing b by $2r$ and substituting $y_1 = 0$ in Equation (iii), the shearing stress the diametral axis is obtained as,

$$\tau_{max} = \frac{2Vr^3}{3I2r} = \frac{Vr^2}{3I}$$

We have moment of inertia for a circular section,

$$I = \frac{\pi r^4}{4}$$

Therefore, $$\tau_{max} = \frac{Vr^2 4}{3\pi r^4}$$

Now substituting $A = \pi r^2$, the required expression of shearing stress becomes,

$$\tau_{max} = \frac{4}{3}\frac{V}{A} \quad Answer$$

Problem P4.2:

A beam of isosceles triangular cross-section is subjected to a vertical shear V. The ver of the triangle remains uppermost with altitude h and base b. Find the shearing str distribution with respect to the altitude. Also determine the maximum shearing stress.

Given Data:

Altitude of triangle = h

Base of triangle = b

To Find:

- Shearing stress distribution
- Maximum shearing stress

Solution:

A differential horizontal area has been considered in the cross-section of the beam a shown in the figure below. The location of the neutral axis is also shown in this figure.

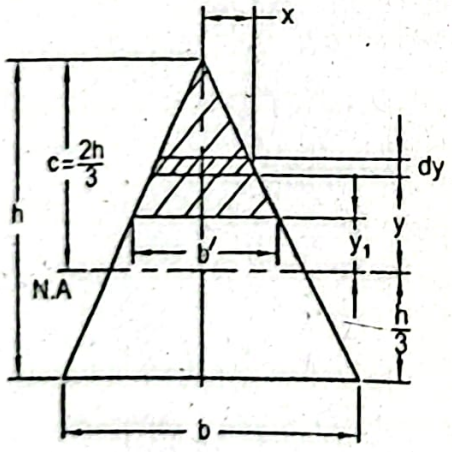

Expression of the shearing stress, $$\tau = \frac{V}{Ib'}\int_{y_1} ydA = \frac{V}{Ib'}\int_{y_1} 2xydy \qquad (i)$$

We have from the similar triangles, $$\frac{x}{\frac{2}{3}h - y} = \frac{b/2}{h}$$

$$\text{or, } x = \frac{b}{2h}\left(\frac{2}{3}h - y\right)$$

uting this value in Equation (i), $\tau = \frac{V}{Ib'}\frac{b}{h}\int_{y_1}^{c}\left(\frac{2}{3}h - y\right)ydy$

$$= \frac{Vb}{Ib'h}\left[\frac{hy^2}{3} - \frac{y^3}{3}\right]_{y_1}^{c}$$

$$= \frac{Vb}{Ib'h}\left[\frac{h}{3}c^2 - \frac{c^3}{3} - \frac{h}{3}y_1^2 + \frac{y_1^3}{3}\right]$$

uting the value of $c = \frac{2}{3}h$, $\tau = \frac{Vb}{Ib'h}\left[\left(\frac{h}{3}\frac{4h^2}{9} - \frac{8h^3}{81}\right) - \frac{h}{3}y_1^2 + \frac{y_1^3}{3}\right]$

$$= \frac{Vb}{Ib'h}\left[\frac{4h^3}{81} - \frac{h}{3}y_1^2 + \frac{y_1^3}{3}\right] \qquad (ii)$$

from Equation (ii) we find the shearing stresses at the different altitudes as s,

tude $\frac{h}{3}$, $y_1 = 0$ and $b' = \frac{2}{3}b$, therefore,

$$\tau = \frac{3Vb}{2 \times \frac{1}{36}bh^3 \times bh} \times \frac{4h^3}{81} = \frac{8}{3}\frac{V}{bh}$$

tude $h = 0$, $y_1 = -\frac{h}{3}$, therefore, $\tau = 0$

itude h, $y_1 = \frac{2h}{3}$, therefore, $\tau = 0$

itude $\frac{h}{2}$, $y_1 = \frac{h}{6}$ and $b' = \frac{b}{2}$, therefore,

$$\tau = \frac{Vb \times 2}{\frac{1}{36}bh^3 \times bh} \times \frac{h^3}{24} = \frac{3V}{bh}$$

itude $\frac{3}{4}h$, $y_1 = \frac{5}{12}h$ and $b' = \frac{b}{4}$, therefore,

$$\tau = \frac{Vb \times 4h^3}{\frac{1}{36}bh^3 bh \times 64} = \frac{9}{4}\frac{V}{bh}$$

fore, the maximum shearing stress occurs at the altitude $\frac{h}{2}$, that is, at the half t from the base of the triangle. Hence, the required maximum shearing stress,

$$\tau_{max} = \frac{3V}{bh} \quad Answer$$

figure.

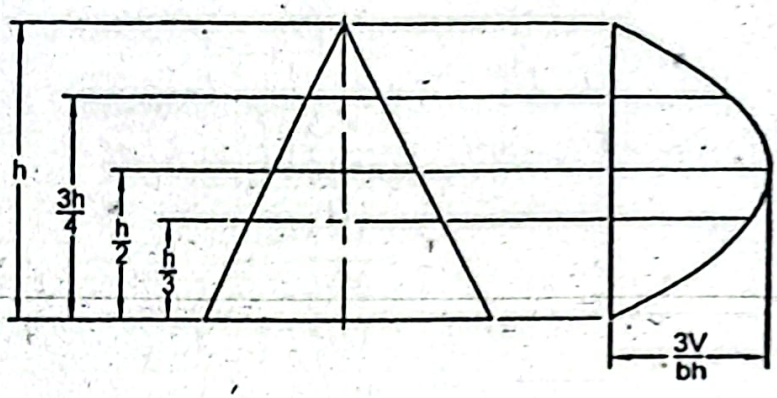

Problem P4.3:

Find an expression for the maximum shearing stress in a beam of thin-walled section of net area A.

Given Data:

Net area = A

To Find:

- Expression of maximum shearing stress, τ_{max}

Solution:

Shearing stress for a thin-walled tubular section will be maximum at the neutral a is, at the diametral axis. For a thin walled tubular section, radius r is consid constant. A differential area is considered in the cross-section of the beam as sh the figure below.

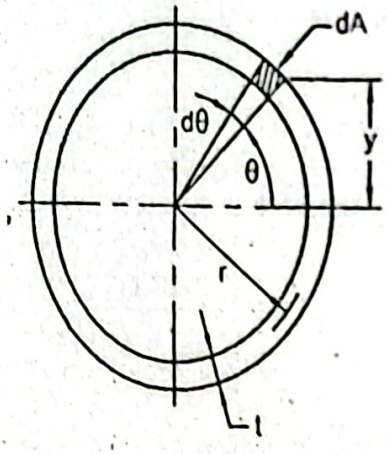

We have for the shearing stress, $\tau = \frac{V}{Ib}\int ydA$

But we know;

$$\int ydA = \int r\sin\theta r d\theta t$$

$$= r^2 t\int_0^{\pi} \sin\theta d\theta$$

$$= r^2 t\left[-\cos\theta\right]_0^{\pi}$$

$$= r^2 t\left[-\cos\pi + \cos 0^0\right]$$

$$= r^2 t(1+1)$$

$$= 2r^2 t$$

$$b = 2t$$

t of inertia about the neutral axis, $I = \int y^2 dA$

$$= \int (r Sin\theta)^2 r d\theta t$$

$$= r^3 t \int_0^{2\pi} \sin^2\theta d\theta$$

$$= r^3 t \int_0^{2\pi} \frac{1}{2}(1 - \cos 2\theta) d\theta$$

$$= r^3 t \left[\frac{\theta}{2} - \frac{1}{4}\sin 2\theta\right]_0^{2\pi}$$

$$= \pi r^3 t$$

uting these values in Equation (i) we find,

$$\tau_{max} = \frac{V \times 2r^2 t}{\pi r^3 t \times 2t} = \frac{2V}{2\pi rt} = \frac{2V}{A} \quad Answer$$

(Here net area, $A = 2\pi rt$)

em P4.4:

pply supported beam $100mm \times 200mm$ carries a concentrated load of $45kN$ as in Figure P4.4. Find the (a) maximum normal stress, (b) maximum shearing stress) shearing stress at a point $20mm$ below the top surface.

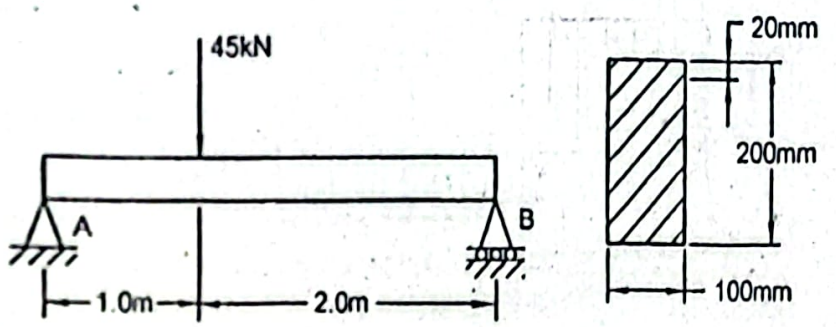

Figure P4.4

n Data:

th of beam, $L = 3m$

h, $b = 100mm$

ıt, $h = 200mm$

entrated load, $P = 45kN$

ind:

ximum normal stress, σ_{max}

ximum shearing stress, τ_{max}

aring stress at a point $20mm$ below top surface

tion:

body diagram of the entire beam is given below.

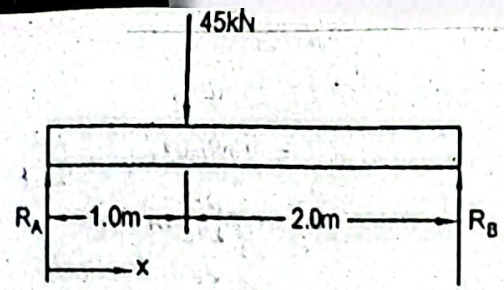

In static equilibrium condition,

$$+\uparrow \sum F_y = 0$$

or, $R_A + R_B - 45 = 0$

or, $R_A + R_B = 45$

$$+\circlearrowleft \sum M_A = 0$$

$$R_B \times 3 - 45 \times 1.0 = 0$$

or, $R_B = 15kN$

Therefore, or, $R_A = 45 - R_B = (45-15)kN = 30kN$

To find the shear force,

For $0 < x < 1.0m$ $V_x = R_A = 30kN$

For $1.0m < x < 3.0m$ $V_x = R_A - 45 = (30-45)kN = -15kN$

Shear force and bending moment diagrams are shown as follows.

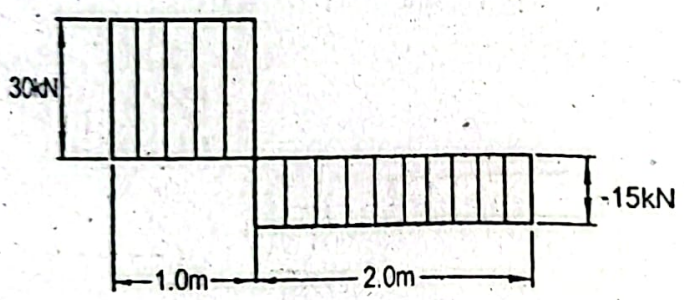

Shear force diagram

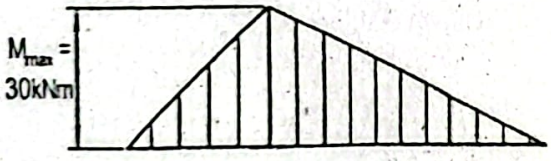

Bending moment diagram

We have, $\Delta M = (area)_V$

Therefore, $M_{max} = (30 \times 1.0)kNm = 30kNm$

Moment of inertia about the neutral axis,

$$I = \frac{1}{12}bh^3 = \frac{1}{12} \times 100 \times 200^3 mm^4 = 66.67 \times 10^6 mm^4$$

(a) Maximum normal stress occurs at the extreme fibers. Therefore,

$$\sigma_{max} = \frac{Mc}{I} = \frac{M_{max} h/2}{I}$$

$$= \frac{30\times10^{6}\times(200/2)}{66.67\times10^{6}} MPa = 45MPa \ \textit{Answer}$$

Maximum shearing stress occurs at the neutral axis. Maximum shear force,

$$V_{max} = 30kN$$

Therefore, the maximum shearing stress,

$$\tau_{max} = \frac{3}{2}\frac{V}{A} = \frac{3}{2}\frac{V}{bh} = \frac{3}{2}\times\frac{30\times10^{3}}{100\times200} MPa$$
$$= 2.25MPa \ \textit{Answer}$$

Now to find the shearing stress at $20mm$ below the top surface, a section of the beam considered as follows.

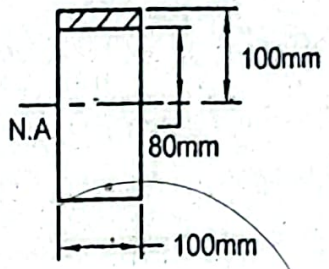

Shearing stress,

$$\tau = \frac{V}{Ib}\int_{80}^{100} ydA$$
$$= \frac{V}{Ib}\times100\int_{80}^{100} ydy$$
$$= \frac{30\times10^{3}}{66.67\times10^{6}\times100}\times100\times\left[\frac{y^{2}}{2}\right]_{80}^{100}$$
$$= 0.81MPa \ \textit{Answer}$$

Problem P4.5:

A simply supported beam $25mm$ wide and $50mm$ deep is $6m$ long. Determine the maximum normal stress and the maximum shearing stress due to its self weight if the density of steel is $7850kg/m^{3}$.

Given Data:

Length of beam, $L = 6m$

Width, $b = 25mm$

Depth, $h = 50mm$

Density of steel, $\rho = 7850kg/m^{3}$

To Find:

Maximum normal stress, σ_{max}

Maximum shearing stress, τ_{max}

Solution:

The free body diagram of the entire beam is shown below.

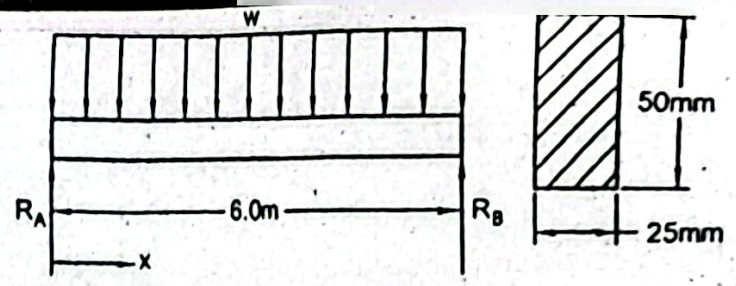

Since the self weight of the beam is distributed uniformly throughout its length, it ca considered as a uniformly distributed load w.

Therefore, $w = \rho g \times b \times w$

$= 7850 \times 9.81 \times 25 \times 50 \times 10^{-6}\ N/m = 96.26\ N/m$

For the symmetrical loading, $R_A = R_B = (w \times 6)/2$

$= (96.26 \times 6)/2N = 288.78N$

Moment of inertia about the neutral axis of the beam section,

$$I = \frac{1}{12} \times b \times h^3 = \frac{1}{12} \times 25 \times 50^3\ mm^4 = 260{,}417\ mm^4$$

Shear force, $V_x = (R_A - wx) = (288.78 - 96.26x)N$

At $x = 0$, $V_{x=0} = 288.78N$

Shear force and bending moment diagrams are shown below.

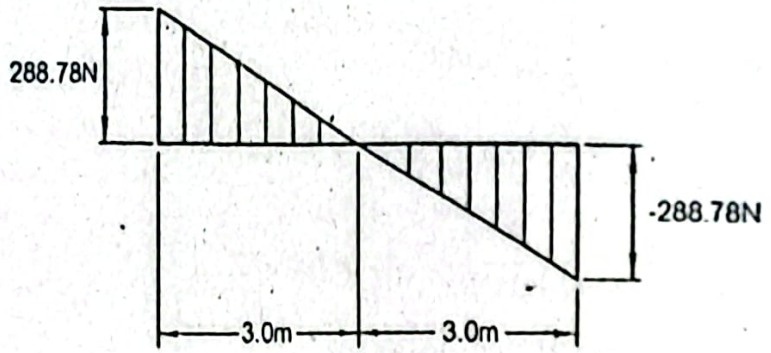

Shear force diagram

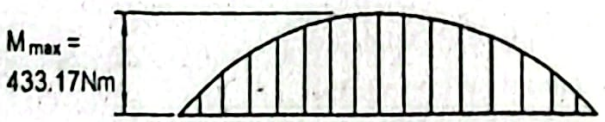

Bending moment diagram

Maximum bending moment occurs at the point of zero shear.

We have, $\Delta M = (area)_V$

Therefore, $M_{max} = \frac{1}{2} \times 288.78 \times 3Nm = 433.17Nm$

Maximum normal stress occurs at the extreme fibers. Therefore, maximum normal stres

$$\sigma_{max} = \frac{Mc}{I} = \frac{M_{max} h/2}{I}$$

$$= \frac{433.17 \times 10^3 \times (50/2)}{260417} MPa = 41.58MPa \quad \textit{Answer}$$

aximum shearing stress occurs at the neutral axis. Maximum shear force,

$$V_{max} = 288.78N$$

aximum shearing stress for a rectangular section,

$$\tau_{max} = \frac{3}{2}\frac{V}{A} = \frac{3}{2}\frac{V}{bh}$$

$$= \frac{3}{2} \times \frac{288.78}{25 \times 50} MPa = 0.35MPa \text{ Answer}$$

oblem P4.6:

beam of rectangular cross-section is manufactured from a raw material stock of *0mm* diameter. Determine the width and depth of the beam so that the maximum ength is obtained in pure bending. Also determine the bending moment if the ximum flexure stress is not to exceed *100MPa*.

ven Data:

ameter of member, $D = 150mm$

owable flexure stress, $\sigma_a = 100MPa$

Find:

/idth of beam, b

epth of beam, h

ending moment, M

ution:

ss-section of the beam in a member of circular diameter is shown below.

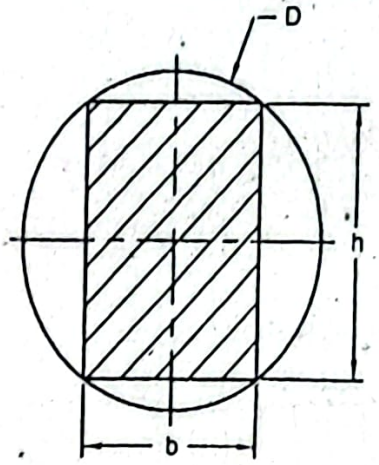

can find a relation among D, b and h as follows,

$$D^2 = b^2 + h^2 \qquad (i)$$

/ from the flexure formula, $\sigma = \frac{Mc}{I}$

$$\text{or, } \sigma_{max} = \frac{M \times h/2}{\frac{1}{12}bh^3} = \frac{6M}{bh^2}$$

n this equation it is observed that σ_{max} is a constant, therefore, bending moment will naximum when bh^2 will be maximum.

Now from Equation *(i)* we find, $bh^2 = b\left(D^2 - b^2\right) = bD^2 - b^3$

For bh^2 to be maximum differentiating with respect to b and setting it equal to zero find,

$$\frac{d\left(bh^2\right)}{db} = D^2 - 3b^2 = 0$$

$$\text{or, } b = \frac{D}{\sqrt{3}} = \frac{150}{\sqrt{3}}mm = 86.60mm \text{ Answer}$$

Therefore, $$h^2 = D^2 - b^2 = D^2 - \frac{D^2}{3} = \frac{2}{3}D^2$$

$$\text{or, } h = \sqrt{\frac{2}{3}}D = \sqrt{\frac{2}{3}} \times 150mm = 122.47mm \text{ Ans}$$

From the flexure formula, $$\sigma = \frac{6M}{bh^2}$$

$$\text{or, } \sigma_a = 100 = \frac{6M \times 10^6}{86.6 \times \left(122.47\right)^2}$$

$$\text{or, } M = 21.65kNm \text{ Answer}$$

Problem P4.7:

A cantilever beam *100mm* wide and *200mm* deep carries a uniformly distributed lo *10kN / m* over its entire length. If the flexure stress is limited to *100MPa*, determin permissible length.

Given Data:

Width, $b = 100mm$

Depth, $h = 200mm$

Distributed load, $w = 10kN/m$

Allowable flexure stress, $\sigma_a = 100MPa$

To Find:

- Length of beam, L

Solution:

Free body diagram of the entire beam is shown below.

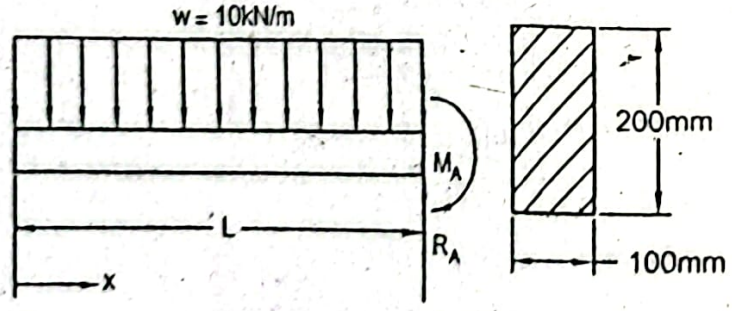

Shear force, for $0 < x < L$, $$V_x = -wx$$

$$= -10x \ kN$$

At $x = L$, $$V_{x=L} = -10L \ kN$$

Shear force and bending moment diagrams are given below.

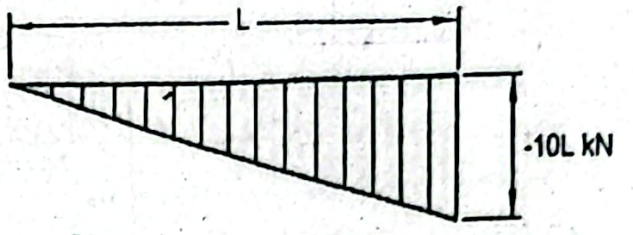

Shear force diagram

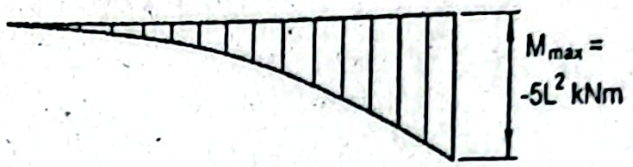

Bending moment diagram

Maximum bending moment occurs at the root of the beam.

We have, $\Delta M = (\text{area})_V$

Therefore, omitting the negative sign the maximum bending moment becomes,

$$M_{max} = \frac{1}{2} \times L \times 10L = 5L^2 \, kNm$$

We have the flexure formula, $\sigma = \frac{Mc}{I} = \frac{M_{max} \times \frac{h}{2}}{\frac{1}{12} \times b \times h^3}$

$$\text{or, } \sigma_a = 100 = \frac{5L^2 \times 10^6 \times \frac{200}{2}}{\frac{1}{12} \times 100 \times 200^3}$$

$$\text{or, } L = 3.65m \; \textit{Answer}$$

Problem P4.8:

A simply supported beam of length $4m$ and cross-section $50mm \times 50mm$ carries a uniformly distributed load of $w kN/m$ symmetrically placed at the middle of the beam. Determine the largest value of w if the allowable flexure stress is $100MPa$.

Given Data:

Length of beam, $L = 4m$

Width, $b = 50mm$

Depth, $h = 50mm$

Allowable flexure stress, $\sigma_a = 100MPa$

To Find:

Largest value of w

Solution:

Free body diagram of the entire beam is given in the figure below.

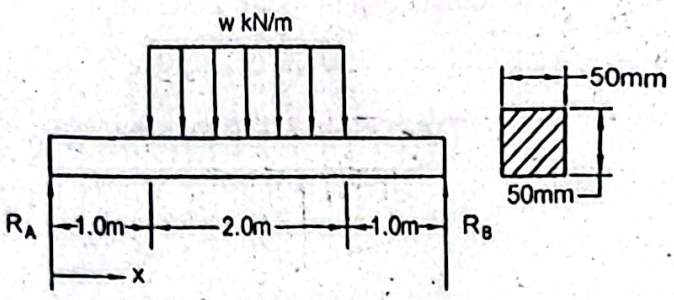

For the symmetric loading, $R_A = R_B = (w \times 2)/2 = w\,kN$

Shear force;

For $0 < x < 1.0m$ $\quad V_x = R_A = w\ kN$

For $1.0m < x < 3m$ $\quad V_x = R_A - w(x - 1.0)$

$$= w - wx + w = 2w - wx = w(2 - x)\,kN$$

Shear force and bending moment diagrams are shown below.

Maximum bending moment occurs at the point of zero shear force.

Now we have, $\quad \Delta M = (area)_V$

Therefore, $\quad M_{max} = w \times 1.0 + \frac{1}{2} \times w \times 1 = \frac{3w}{2}\,kNm$

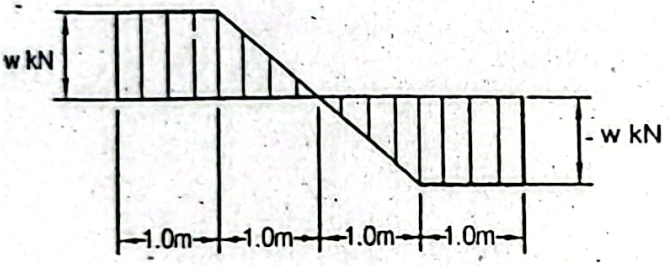

Shear force diagram

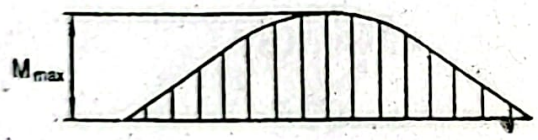

Bending moment diagram

Moment of inertia about the neutral axis,

$$I = \frac{1}{12} \times b \times h^3$$

$$= \frac{1}{12} \times 50 \times 50^3\,mm^4 = 520833mm^4$$

We have the flexure stress, $\sigma = \frac{Mc}{I} = \frac{M_{max} \times h/2}{I}$

$$\text{or, } \sigma_a = 100 = \frac{\frac{3w}{2} \times 10^6 \times \frac{50}{2}}{520833}$$

$$\text{or, } w = 1.39kN/m \text{ Answer}$$

Problem P4.9:

A simply supported beam of length $4m$ carries a uniformly distributed load of $30kN/m$ over its entire length as shown in Figure P4.9. If the width and height of the beam section are respectively $125mm$ and $250mm$, determine the (a) maximum normal stress in the beam, (b) maximum shearing stress in the beam and (c) shearing stress at the mid-point in between the top surface and the neutral axis of the beam.

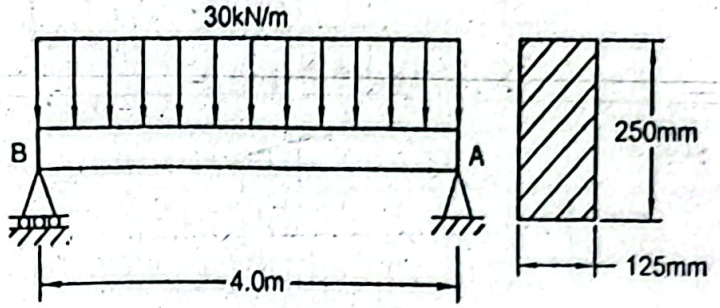

Figure P4.9

Given Data:

Length of beam, $L = 4m$

Width of beam, $b = 125mm$

Depth of beam, $h = 250mm$

Distributed load, $w = 30kN/m$

To Find:

- Maximum normal stress, σ_{max}
- Maximum shearing stress, τ_{max}
- Shearing stress in between top surface and neutral axis, τ

Solution:

Free body diagram of the entire beam is given below.

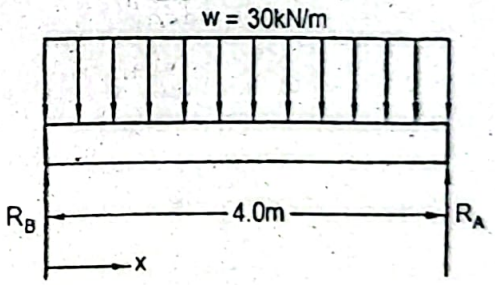

For the symmetric loading, $R_A = R_B = (w \times 4)/2 = (30 \times 4)/2 = 60kN$

Shear stress,

For $0 < x < 4m$ $\quad V_x = R_B - wx$

$= (60 - 30x)kN$

At $x = 0$, $\quad V_{x=0} = 60kN$

Shear force and bending moment diagrams are shown below.

Maximum bending occurs at the location of zero shear, that is, at $x = 2m$.

Now we have, $\quad \Delta M = (area)_V$

Therefore, $\quad M_{max} = \frac{1}{2} \times 60 \times 2kNm = 60kNm$

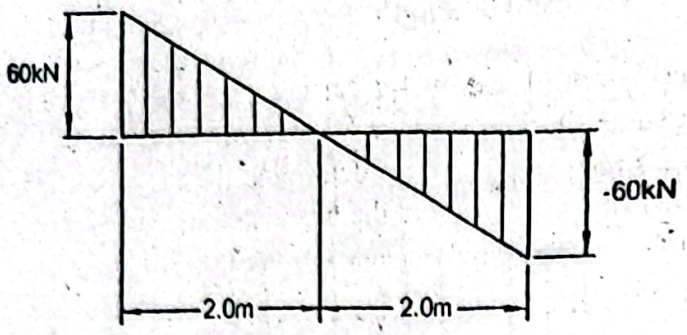

Shear force diagram

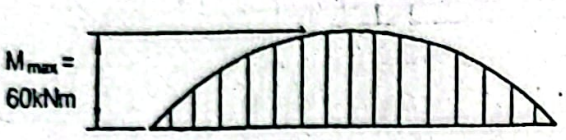

Bending moment diagram

(a) Maximum normal stress will occur at the extreme fibers. Maximum normal stress,

$$\sigma_{max} = \frac{Mc}{I} = \frac{M_{max} \times h/2}{I}$$

We have, moment of inertia about the neutral axis,

$$I = \frac{1}{12} \times bh^3 = \frac{1}{12} \times 125 \times 250^3 \, mm^4 = 1.63 \times 10^8 \, mm^4$$

Therefore, $$\sigma_{max} = \frac{60 \times 10^6 \times (250/2)}{1.63 \times 10^8} MPa = 46.01 MPa \quad \textbf{Answer}$$

(b) Maximum shearing stress occurs at the neutral axis. From the figure, maximum sh force, $V_{max} = 60kN$

Therefore, the maximum shearing stress,

$$\tau_{max} = \frac{3V}{2A} = \frac{3}{2} \times \frac{60 \times 10^3}{125 \times 250} MPa = 2.88 MPa$$

(c) Now to find the shearing stress at the mid-point in between the top surface and neutral axis, a section of the beam is considered as follows.

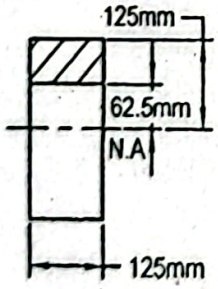

Shearing stress, $$\tau = \frac{V}{Ib} \int_{62.5}^{125} y dA$$

$$= \frac{V}{Ib} \times 125 \int_{62.5}^{125} y dA$$

$$= \frac{60 \times 10^3}{1.63 \times 10^8 \times 125} \times 125 \left[\frac{y^2}{2} \right]_{62.5}^{125}$$

$$= 2.16 MPa \quad \textbf{Answer}$$

Problem P4.10:

An overhanging beam carries a uniformly distributed load of $15kN/m$ and a concentrated load of $30kN$ as shown in Figure P4.10. Determine the depth h if $h = 2b$ and the allowable flexure stress is $50MPa$.

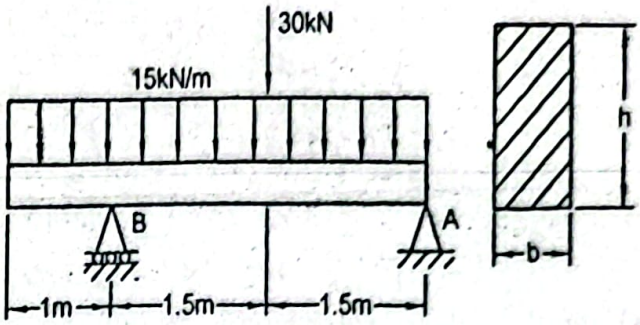

Figure P4.10

Given Data:

Length of beam, $L = 4m$

Width of beam $= b$

Depth of beam, $h = 2b$

Distributed load, $w = 15kN/m$

Concentrated load, $P = 30kN$

Allowable flexural stress, $\sigma_a = 50MPa$

To Find:

Depth of beam, h

Solution:

Free body diagram of the entire beam is shown below.

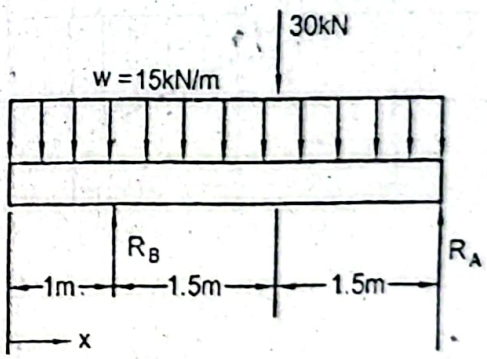

In static equilibrium condition,

$$+\uparrow \sum F_y = 0$$

or, $R_A + R_B - w \times 4 - 30 = 0$

or, $R_A + R_B = (15 \times 4 + 30)kN = 90kN$

$$+\circlearrowleft \sum M_A = 0$$

or, $w \times 4 \times 2 + 3 \times 1.5 - R_B \times 3 = 0$

or, $15 \times 4 \times 2 + 30 \times 1.5 - R_B \times 3 = 0$

or, $R_B = 55kN$

Therefore, $R_A = 90 - R_B = (90 - 55)kN = 35kN$

To find the shear force,

For $0 < x < 1m$ $\quad V_x = -wx = -15x\ kN$

At $x = 1m$, $\quad V_{x=1} = (-15 \times 1)kN = -15kN$

For $1m < x < 2.5m$ $\quad V_x = -wx + R_B$

$= (-15x + 55)kN$

At $x = 1m$, $\quad V_{x=1.0} = (-15 \times 1.0 + 55)kN = 40.0kN$

At $x = 2.5m$, $\quad V_{x=2.5} = (-15 \times 2.5 + 55)kN = 17.5kN$

Shear force and bending moment diagrams are shown below.

Bending moment is maximum at the point of zero shear, that is, at $x = 2.5m$.

We have bending moment equation,

For $1m < x < 2.5m$ $\quad M_x = -\frac{wx^2}{2} + R_B(x-1)$

$= -\frac{15x^2}{2} + 55(x-1)$

At $x = 2.5m$, $\quad M_{x=2.5} = -\frac{15}{2} \times (2.5)^2 + 55(2.5-1) = 35.625kNm = M_{max}$

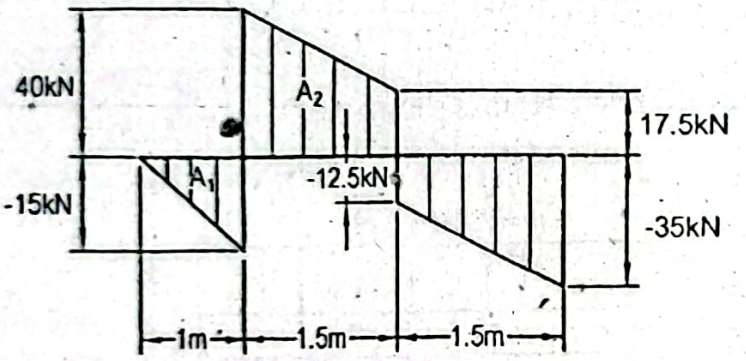

Shear force diagram

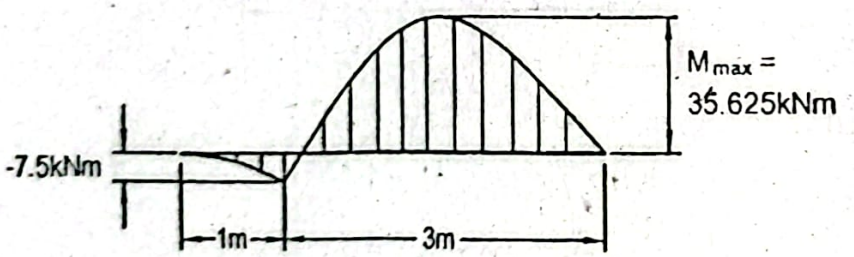

Bending moment diagram

Alternately this maximum bending moment can be obtained from the shear fo diagram.

We have, $\quad \Delta M = (area)_V$

Therefore, $\quad M_{max} = (-A_1 + A_2)$

$= -\frac{1}{2} \times 15 \times 1.0 + \frac{40 + 17.5}{2} \times 1.5$

$= 35.625kNm$

We have the flexure stress, $\sigma = \frac{My}{I} = \frac{M_{max}c}{I}$

$$\text{or, } \sigma_a = 50 = \frac{35.625\times10^6\times h/2}{\frac{1}{12}\times b\times h^3}$$

$$\text{or, } 50 = \frac{35.625\times10^6\times6}{bh^2}$$

$$\text{or, } 50 = \frac{35.625\times10^6\times6}{4b^3}$$

$$\text{or, } b = 102.24mm$$

Therefore, the required depth of the beam,

$$h = 2b = 2\times102.25mm \approx 205mm \textbf{ Answer}$$

Problem P4.11:

A simply supported steel beam of circular cross-section is subjected to two concentrated loads as shown in Figure P4.11. If the limiting normal stress in either tension or compression is $120MPa$, determine the diameter of the beam. Also determine the shearing stress at the diametral axis.

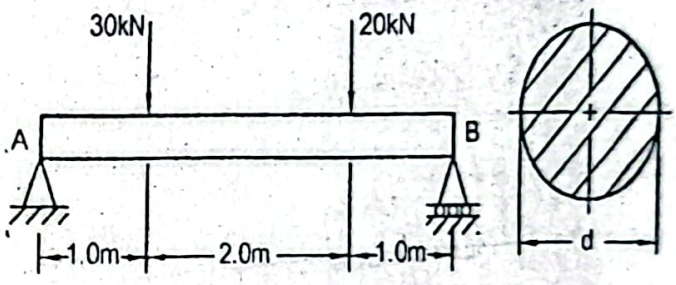

Figure P4.11

Given Data:

Length of beam, $L = 4m$

Concentrated loads, $P = 30kN$ and $20kN$

Allowable stress in tension or compression, $\sigma_a = 120MPa$

Find:

Diameter of beam, d

Shearing stress at diametral axis, τ_{max}

Solution:

The body diagram of the entire beam is shown below.

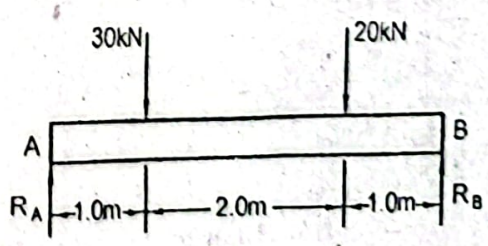

Static equilibrium condition,

$$+\uparrow \sum F_y = 0$$

or, $R_A + R_B - 30 - 20 = 0$

or, $R_A + R_B = 50$

$$+\circlearrowleft \sum M_A = 0$$

or, $R_B \times 4 - 20 \times 3 - 30 \times 1.0 = 0$

or, $R_B = 22.5kN$

Therefore, $R_A = 50 - R_B = (50 - 22.5)kN = 27.5kN$

Shear force and bending moment diagrams are given below.

Maximum bending moment occurs at the point of zero shear.

We have, $\Delta M = (area)_V$

Therefore, $M_{max} = (27.5 \times 1.0)kNm = 27.5kNm$

For positive bending moment compression occurs at the top fiber and tension occurs the bottom fiber. Therefore, we obtain from the flexure formula,

$$\sigma = \frac{Mc}{I} = \frac{M_{max} \times d/2}{\frac{\pi d^4}{64}}$$

or, $\sigma_a = 120 = \frac{27.5 \times 10^6 \times 32}{\pi d^3}$

or, $d = 132.65mm$ *Answer*

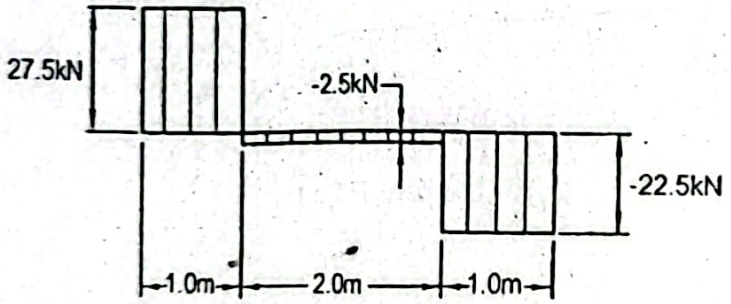

Shear force diagram

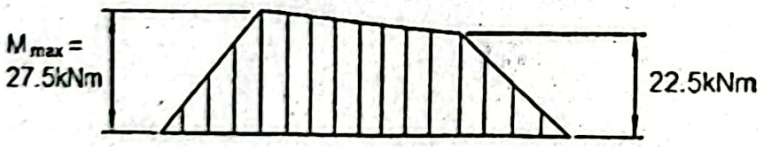

Bending moment diagram

Now to obtain the shearing stress at the diametral axis,

$$\tau_{max} = \frac{4}{3}\frac{V}{A}$$

$$= \frac{4}{3} \times \frac{V_{max}}{\frac{\pi d^2}{4}} = \frac{4}{3} \times \frac{27.5 \times 10^3 \times 4}{\pi \times (132.65)^2}$$

$$= 2.65MPa$$ *Answer*

Problem

A box overhanging beam carries a uniformly distributed load of $5kN/m$ and a concentrated load of $10kN$ as shown in Figure P4.12. If the allowable stress in either tension or compression is $120MPa$, determine the thickness t.

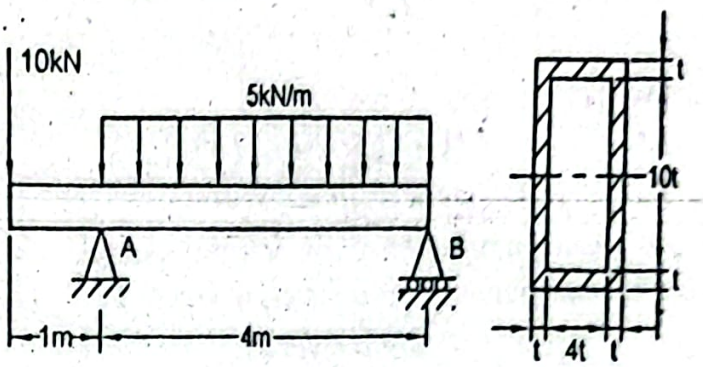

Figure P4.12

Given Data:

Length of beam, $L = 5m$

Distributed load, $w = 5kN/m$

Concentrated load, $P = 10kN$

Allowable stress in either tension or compression, $\sigma_a = 100MPa$

To Find:

- Thickness, t

Solution:

Free body diagram of the entire beam is shown below.

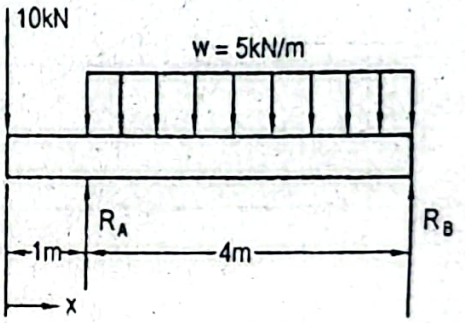

In static equilibrium condition,

$$+\uparrow \sum F_y = 0$$

$$R_A + R_B - 10 - w \times 4 = 0$$

or, $$R_A + R_B = (10 + 5 \times 4) = 30$$

$$+\circlearrowleft \sum M_A = 0$$

$$R_B \times 4 - w \times 4 \times 2 + 10 \times 1.0 = 0$$

or, $$R_B \times 4 - 5 \times 4 \times 2 + 10 \times 1.0 = 0$$

or, $$R_B = 7.5kN$$

Therefore, $$R_A = 30 - R_B = (30 - 7.5)kN = 22.5kN$$

Shear force,

For $0 < x < 1.0m$ $$V_x = -10kN$$

For $1.0m < x < 5.0m$ $V_x = -10 + R_A - w \times (x - 1.0)$

$= -10 + 22.5 - 5(x - 1.0)$

$= (-5x + 17.5)kN$

To locate the point of zero shear force,

$V_x = 0 = -5x + 17.5$

or, $x = 3.5m$

Shear force and bending moment diagrams are given below.

Bending moment is maximum at the point of zero shear.

We have, $\Delta M = (area)_v$

Bending moments, $M_A = (-10 \times 1.0)kNm = -10kNm$

and, $M_C = -10 \times 1.0 + \frac{1}{2} \times 12.5 \times 2.5 = 5.625kNm$

Therefore, the maximum bending moment,

$M_{max} = M_A = -10kNm$

Moment of inertia about the neutral axis is given by,

$$I = \frac{1}{12} \times 6t \times (12t)^3 - \frac{1}{12} \times 4t \times (10t)^3 = 530.67t^4 mm^4$$

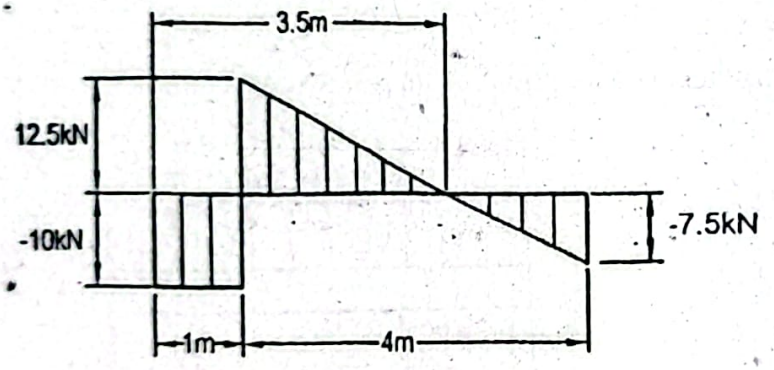

Shear force diagram

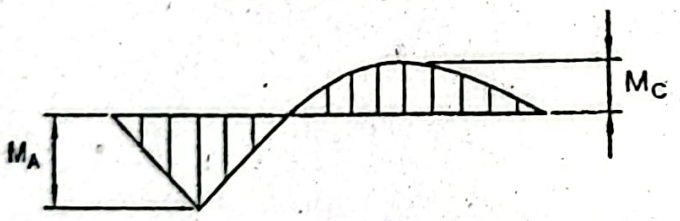

Bending moment diagram

Normal stress will be maximum at either the top or bottom fiber.

Therefore, from the flexure formula we find,

$$\sigma = \frac{M_{max} c}{I}$$

$$\text{or, } \sigma_a = 100 = \frac{10 \times 10^6 \times 6t}{530.67t^4}$$

or, $t = 10.42mm$ **Answer**

blem P4.13:

imply supported beam of $50mm \times 100mm$ is subjected to a couple of $6kNm$ and a centrated load of $5kN$ as shown in Figure P4.13. Find the maximum flexure stress the maximum shearing stress developed in the beam.

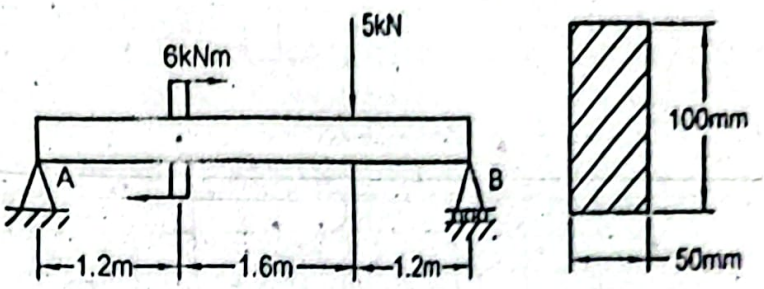

Figure P4.13

en Data:

gth of beam, $L = 4m$

lth of beam, $b = 50mm$

)th of beam, $h = 100mm$

ıcentrated load, $P = 5kN$

ıple, $M = 6kNm$

Find:

aximum flexure stress, σ_{max}

aximum shearing stress, τ_{max}

ution:

e body diagram of the entire beam is shown below.

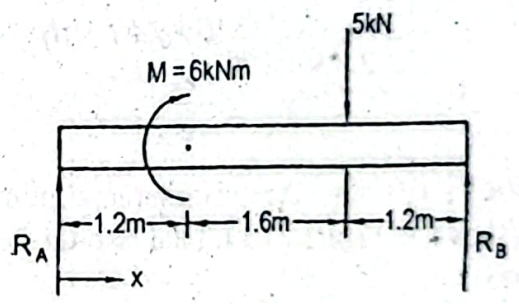

tatic equilibrium condition,

$$+\uparrow \sum F_y = 0$$

or, $R_A + R_B - 5 = 0$

or, $R_A + R_B = 5$

$$+\circlearrowleft \sum M_A = 0$$

or, $R_B \times 4 - 5 \times 2.8 - 6 = 0$

or, $R_B = 5kN$

refore, $R_A = 5 - R_B = 5 - 5 = 0$

ar force,

$0 < x < 2.8m$ $V_x = R_A = 0kN$

$2.8m < x < 4.0m$ $V_x = R_A - 5 = 0 - 5 = -5kN$

Shear force and bending moment diagrams are given below.

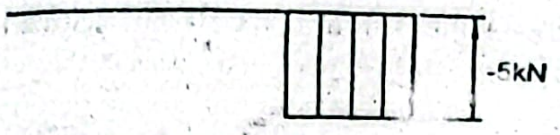

Shear force diagram

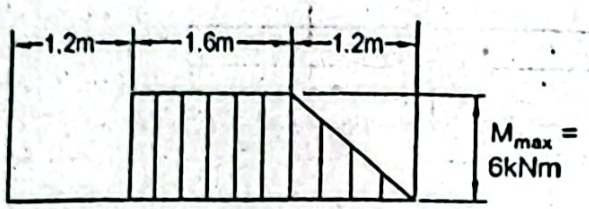

Bending moment diagram

Now we have, $\Delta M = (\text{area})_V$

Therefore, $M_{max} = (5 \times 1.2)\,kNm = 6kNm$

Maximum flexure stress, $\sigma_{max} = \dfrac{M_{max} c}{I}$

$$= \frac{6 \times 10^6 \times \frac{100}{2}}{\frac{1}{12} \times 50 \times 100^3} MPa = 72MPa \quad \textbf{Answer}$$

Maximum shearing stress, $\tau_{max} = \dfrac{3}{2}\dfrac{V}{A} = \dfrac{3}{2}\dfrac{V}{bh}$

$$= \frac{3}{2} \times \frac{5 \times 10^3}{50 \times 100} MPa = 1.5MPa \quad \textbf{Answer}$$

Problem P4.14:

For a shear force of *150kN*, determine the maximum and minimum shearing stres the web of *I*-section as shown in Figure P4.14. Find also the percentage of vertical carried by the web of the beam.

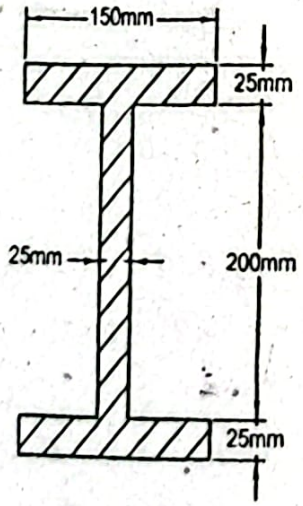

Figure P4.14

Given Data:

Shear force, $V = 150kN$

To Find:

- Maximum and minimum shear in web, τ_{max} and τ_{min}
- Percentage of vertical shear carried by web

Solution:

Distribution of shearing stress in the section of the beam is shown in the figure below.

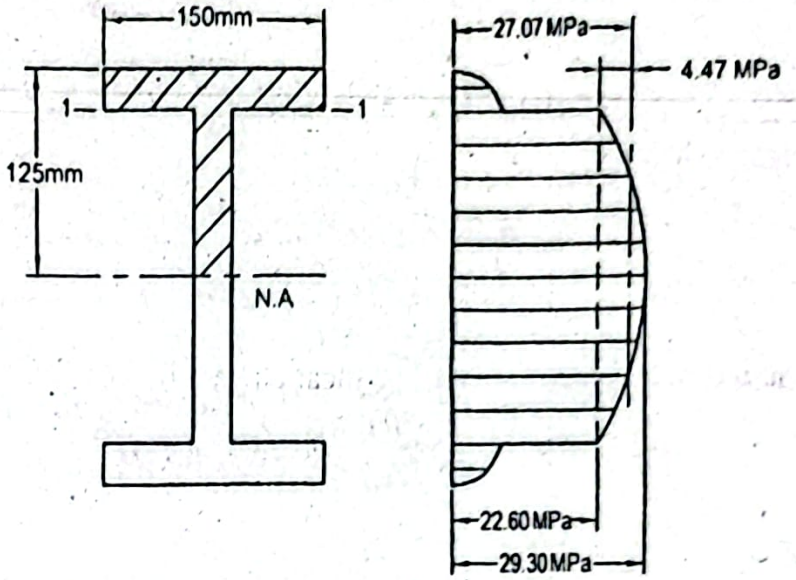

Maximum shearing stress occurs at the neutral axis, where the web width,

$$b = 25mm.$$

Moment of inertia of I-section with respect to the neutral axis,

$$I = \frac{1}{12}\times 150\times 250^3 - \frac{1}{12}\times 125\times 200^3$$

$$= 1.12\times 10^8\ mm^4$$

Maximum shearing stress, $\tau_{max} = \frac{V}{Ib}\int_0^{125} ydA$

But we have,

$$\int_0^{125} ydA = \int_0^{125} 150\,ydy - \int_0^{100} 125\,ydy$$

$$= 150\times\left[\frac{y^2}{2}\right]_0^{125} - 125\left[\frac{y^2}{2}\right]_0^{100}$$

$$= 54.69\times 10^4\ mm^3$$

Therefore,

$$\tau_{max} = \frac{150\times 10^3\times 54.69\times 10^4}{1.12\times 10^8\times 25} MPa = 29.30MPa$$

Now to calculate the minimum stress, τ_{min} along 1-1 with the web width of $25mm$,

$$\tau_{min} = \frac{V}{Ib}\int_{100}^{125} ydA = \frac{V}{Ib}\int_{100}^{125} 150\,ydy$$

$$\text{or, } \tau_{min} = \frac{150\times 10^3}{1.12\times 10^8\times 25}\times 150\left[\frac{y^2}{2}\right]_{100}^{125}$$

$$= 22.60MPa \text{ Answer}$$

We have for the parabolic distribution of shearing stress,

$$\tau_{max} = \frac{3V}{2A} = \frac{3}{2}\tau_{av}$$

$$\text{or, } \tau_{av} = \frac{2}{3}\tau_{max}$$

Now using this equation for the portion of the parabolic distribution of shearing s only,

$$\tau_{av} = \frac{2}{3}(29.30 - 22.60)MPa = 4.47MPa$$

Therefore, the average shearing stress in the web,

$$\tau'_{av} = (22.60 + 4.47)MPa = 27.07MPa$$

Shear force in the web, $= A\tau'_{av} = (25 \times 200) \times 27.07kN$

$$= 135.35kN$$

Therefore, the required percentage of the vertical shear carried by the web,

$$\%V_{web} = \frac{135.35 \times 100}{150} = 90.23\% \text{ Answer}$$

Problem P4.15:

An overhanging beam is composed of *20mm* plates to make a box cross-section *100mm* width and *200mm* depth as shown in Figure P4.15. The beam carries uniformly distributed load of *40kN / m* and a couple of *45kNm* at its free e Determine the maximum normal stress and the maximum shearing stress for this loadin

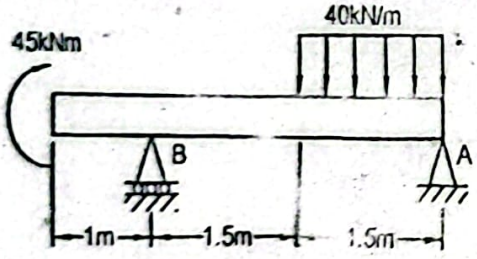

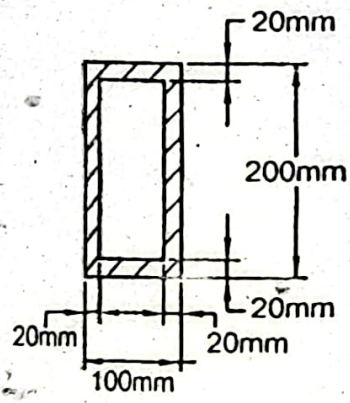

Figure P4.15

Given Data:

Width, $b = 100mm$

Depth, $h = 200mm$

Plate thickness, $t = 20mm$

Distributed load, $w = 40kN / m$

Couple, $M = 45kNm$

To Find:

- Maximum normal stress, σ_{max}
- Maximum shearing stress, τ_{max}

Solution:

Free body diagram of the entire beam is shown below.

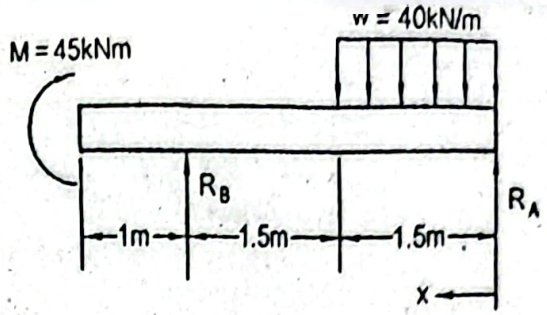

In static equilibrium condition,

$$+\circlearrowleft \sum M_A = 0$$

or, $-M - R_B \times 3 + w \times 1.5 \times 0.75 = 0$

or, $-45 - R_B \times 3 + 40 \times 1.5 \times 0.75 = 0$

or, $R_B = 0kN$

$$+\uparrow \sum F_y = 0$$

or, $R_A + R_B - w \times 1.5 = 0$

or, $R_A = 40 \times 1.5kN = 60kN$

Shear force,

For $0 < x < 1.5m$ $\quad V_x = -R_A + wx$

$$= (-60 + 40x)kN$$

At $x = 1.5m$, $\quad V_{x=1.5} = -60 + 40 \times 1.5 = 0$

Bending moment,

For $0 < x < 1.5m$ $\quad M_x = R_A x - \frac{wx^2}{2}$

$$= \left(60x - \frac{40}{2}x^2\right) = \left(60x - 20x^2\right)kNm$$

At $x = 1.5m$, $\quad V_{x=1.5} = 60 \times 1.5 - 20 \times 1.5^2 = 45kNm$

Shear force and bending moment diagrams are given below.

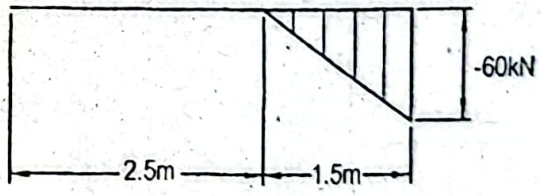

Shear force diagram

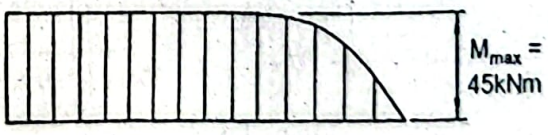

Bending moment diagram

Moment of inertia about the neutral axis of the cross-section,

$$I = \frac{1}{12} \times 100 \times 200^3 - \frac{1}{12} \times 60 \times 160^3 = 46.19 \times 10^6 mm^4$$

Maximum normal stress occurs at the extreme fibers.

Therefore, the maximum normal stress,

$$\sigma_{max} = \frac{Mc}{I} = \frac{M_{max} \times \frac{h}{2}}{I} = \frac{45 \times 10^6 \times (200/2)}{46.19 \times 10^6} MPa$$

$$= 9742 MPa \text{ Answer}$$

Maximum shearing stress occurs at the neutral axis. Maximum shearing stress,

$$\tau_{max} = \frac{V}{Ib} \int y dA = \frac{V}{Ib} \Sigma \bar{y} A$$

But we have, $\sum \bar{y}A = \bar{y}_1 A_1 + \bar{y}_2 A_2$

$$= (100 \times 20) \times 90 + 2 \times (80 \times 20) \times 40$$

$$= 30.8 \times 10^4 mm^3$$

To find the maximum shearing stress a section of the beam is considered as follows.

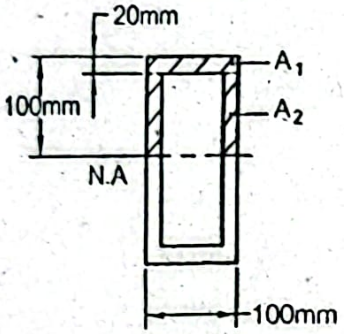

Maximum shear force, $V_{max} = 60kN$

Therefore, $$\tau_{max} = \frac{60 \times 10^3 \times 30.8 \times 10^4}{46.19 \times 10^6 \times 40} MPa = 10MPa \text{ Answer}$$

Problem P4.16:

A simply supported box beam carries a total uniformly distribution load of $3W$ a concentrated load of W as shown in Figure P4.16. If the maximum flexure stress and maximum shearing stress are limited to $25MPa$ and $2MPa$ respectively, determine maximum value of W.

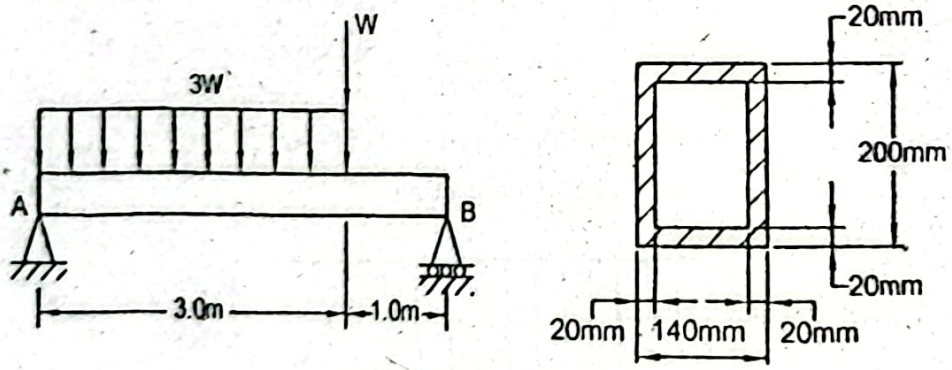

Figure P4.16

Given Data:

Length of beam $= 4m$

Total uniformly distributed load $= 3W$

Concentrated load $= W$

Limiting flexure stress, $\sigma_a = 25MPa$

ing shearing stress,

ind:
ximum value of W

ion:
body diagram of the entire beam is shown below.

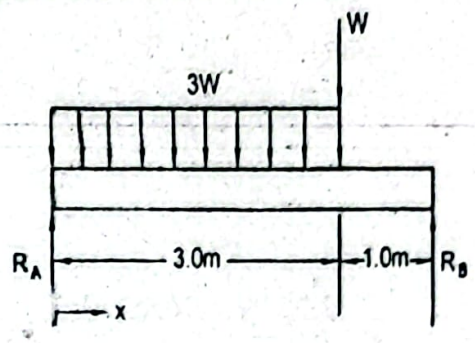

atic equilibrium condition,

$$+\uparrow \sum F_y = 0$$

or, $R_A + R_B - 3W - W = 0$

or, $R_A + R_B = 4W$

$$+\circlearrowleft \sum M_A = 0$$

or, $R_B \times 4 - 3W \times 1.5 - W \times 3 = 0$

or, $R_B = 1.875W\ kN$

efore, $R_A = 4W - R_B = (4W - 1.875W) = 2.125W\ kN$

ar force,

$0 < x < 3m$ $\quad V_x = R_A - \frac{3W}{3}x = (2.125W - Wx)kN$

locate the point of zero shear,

$$V_x = 0 = 2.125W - Wx$$

or, $x = 2.125m$

$x = 3m$, $\quad V_{x=3} = (2.125W - 3W) = -0.875W\ kN$

ear force and bending moment diagrams are given below.

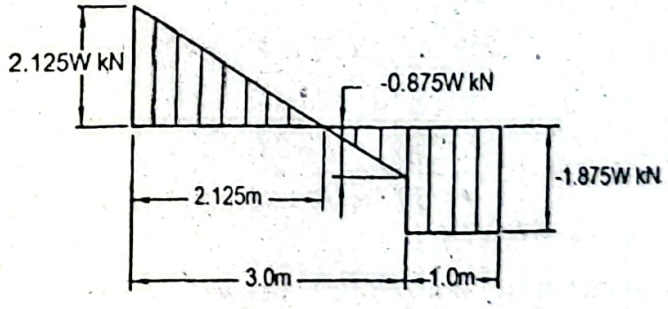

Shear force diagram

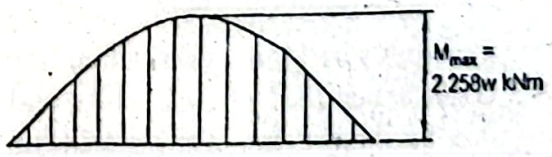

Bending moment diagram

Bending moment is maximum at the point of zero shear.

We have, $\Delta M = (area)_V$

Therefore, $M_{max} = \frac{1}{2} \times 2.125W \times 2.125 = 2.258W \ kNm$

Moment of inertia about the neutral axis,

$$I = \frac{1}{12}\left[140 \times 200^3 - 100 \times 160^3\right] mm^4 = 59.2 \times 10^6 \ mm^4$$

Using flexure formula, $\sigma = \frac{M_{max} c}{I}$

$$\text{or, } \sigma_a = 25 = \frac{2.258W \times 10^6 \times 200/2}{59.2 \times 10^6}$$

$$\text{or, } W = 6.55kN$$

To find the maximum shearing stress a section of the beam is considered as follows

We have shearing stress, $\tau = \frac{V}{Ib} \int_0^{100} ydA$

But, $\int_0^{100} ydA = 2\int_0^{80} 20ydy + \int_{80}^{100} 140ydy$

$$= \left[2 \times 20 \frac{y^2}{2}\right]_0^{80} + \left[140 \times \frac{y^2}{2}\right]_{80}^{100} = 38 \times 10^4 \ mm^3$$

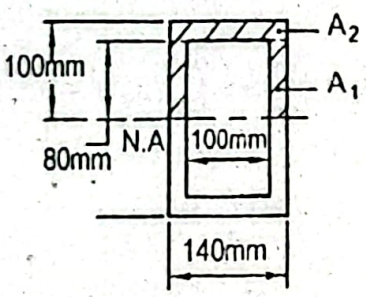

Width, $b = 2 \times 20mm = 40mm$

Maximum shear, $V_{max} = 2.125W \ kN$

Therefore, $\tau = \frac{2.125W \times 10^3 \times 38 \times 10^4}{59.2 \times 10^6 \times 40}$

$$\text{or, } \tau_a = 2 = \frac{2.125W \times 10^3 \times 38 \times 10^4}{59.2 \times 10^6 \times 40}$$

$$\text{or, } W = 5.87 \ kN$$

Therefore, the required maximum, $W = 5.87 \ kN$ *Answer*

Problem P4.17:

A simply supported beam carries a uniformly distribution load of $4kN/m$ over its length together with a concentrated load of $5kN$ at its mid point as shown in P4.17. If the shearing stress is limited to $1.5MPa$, find the length of the beam. determine the maximum normal stress.

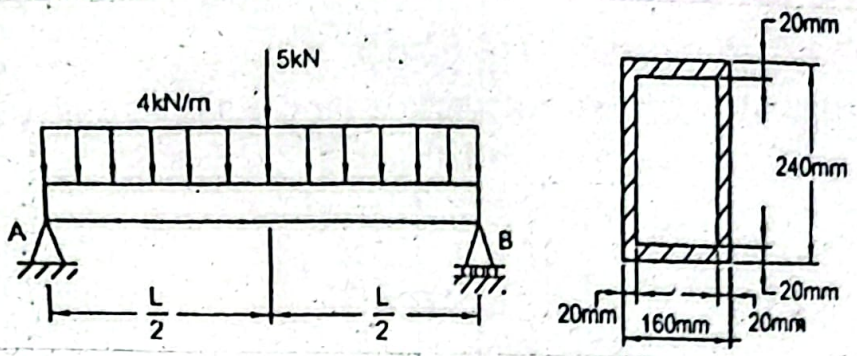

Figure P4.17

Given Data:

Distributed load, $w = 4kN/m$

Concentrated load, $P = 5kN$

Limiting shearing stress, $\tau_a = 1.5MPa$

To Find:

Length of beam, L

Maximum normal stress, σ_{max}.

Solution:

Free body diagram of the entire beam is shown below.

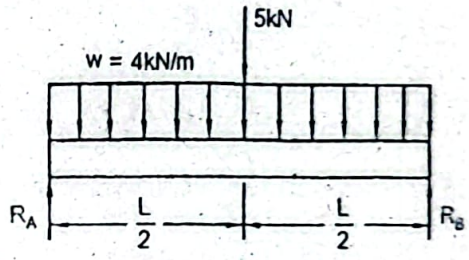

In static equilibrium condition,

$$+\uparrow \sum F_y = 0$$

$$R_A + R_B - w \times L - 5 = 0$$

$$\text{or, } R_A + R_B = (4L + 5)$$

For the symmetric loading, $R_A = R_B = (2L + 2.5)kN$

Shear force and bending moment diagrams are given below.

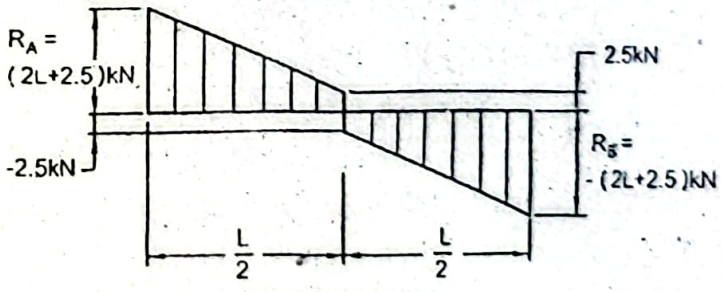

Shear force diagram

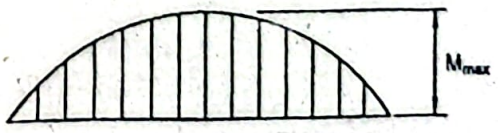

Bending moment diagram

Maximum shear force, $V_{max} = R_A = (2L + 2.5)\,kN$

To find the maximum shearing stress a section of the beam is considered as follo

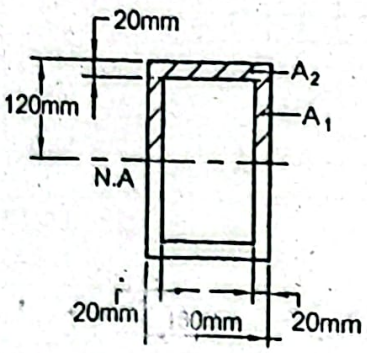

Moment of inertia about the neutral axis (*N.A*),

$$I = \frac{1}{12} \times 160 \times 240^3 - \frac{1}{12} \times 120 \times 200^3$$
$$= 104.32 \times 10^6\, mm^4$$

We have, $\tau = \frac{V.}{Ib} \int ydA$

Since the maximum shearing stress occurs at the neutral axis, therefore,

$$\tau_{max} = \frac{V_{max}}{Ib} \int_0^{120} ydA$$

But we have, $\int_0^{120} ydA = \sum \bar{y}A = 2\bar{y}_1 A_1 + \bar{y}_2 A_2$

$$= 2 \times \frac{100}{2} \times 100 \times 20 + 110 \times 160 \times 20$$
$$= 552 \times 10^3\, mm^3$$

Here at neutral axis, $b = 20 \times 2mm = 40mm$

Therefore, $\tau_{max} = \frac{(2L + 2.5) \times 10^3 \times 552 \times 10^3}{104.32 \times 10^6 \times 40}$

or, $\tau_a = 1.5 = \frac{(2L + 2.5) \times 10^3 \times 552 \times 10^3}{104.32 \times 10^6 \times 40}$

or, $L = 4.42m$ *Answer*

Reaction, $R_A = (26 + 2.5)\,kN = (2 \times 4.42 + 2.5)\,kN = 11.34kN$

We have, $\Delta M = (area)_v$

Therefore, $M_{max} = \frac{11.34 + 2.5}{2} \times \frac{4.42}{2} kNm = 15.29kNm$

Maximum normal stress occurs at either the top or the bottom fiber. Maximum n stress,

$$\sigma_{max} = \frac{Mc}{I} = \frac{M_{max} \times c}{I}$$
$$= \frac{15.29 \times 10^6 \times (240/2)}{104.32 \times 10^6} MPa$$
$$= 17.59MPa$$ *Answer*

Problem P4.18:

A simply supported box beam of T-section carries a couple of $6kNm$ as shown in Figure P4.18. Determine the maximum tensile and compressive stresses in the beam.

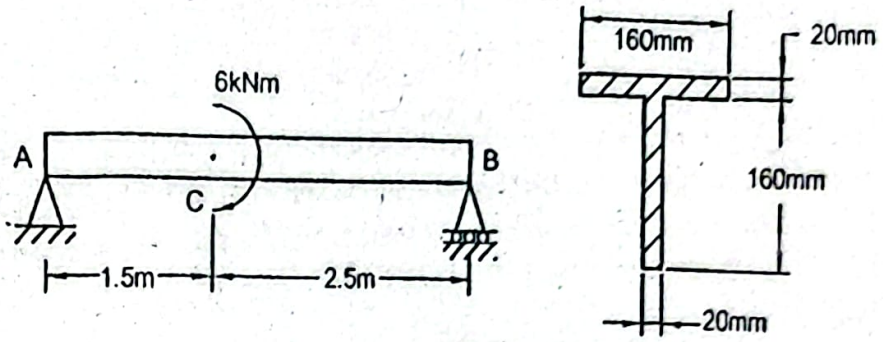

Figure P4.18

Given Data:

Length of beam, $L = 4m$

Couple, $M = 6kNm$

To Find:

- Maximum tensile stress, $\sigma_{t_{max}}$
- Maximum compressive stress, $\sigma_{c_{max}}$

Solution:

Free body diagram of the entire beam is shown below.

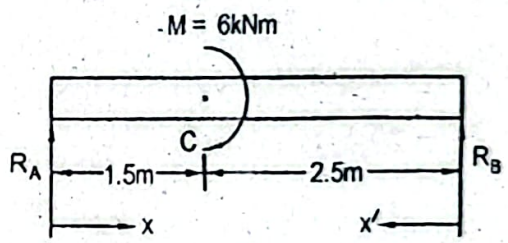

In static equilibrium condition,

$$+\uparrow \sum F_y = 0$$

or, $R_A + R_B = 0$

Therefore, $R_A = -R_B$

$$+\circlearrowleft \sum M_A = 0$$

or, $R_B \times 4 - 6 = 0$

or, $R_B = 1.5kN$

Therefore, $R_A = -R_B = -1.5kN$

To find the equation of the bending moment,

For $0 < x < 1.5m$ $\quad M_x = R_A x = -1.5x\,kNm$

At $x = 1.5m$, $\quad M_{x=1.5} = -1.5 \times 1.5kNm = -2.25kNm$

For $0 < x' < 2.5m$ $\quad M_{x'} = R_B x' = 1.5x'kNm$

At $x' = 2.5m$, $\quad M_{x'=2.5} = 1.5 \times 2.5kNm = 3.75kNm$

Bending moment diagram is shown in the following figure.

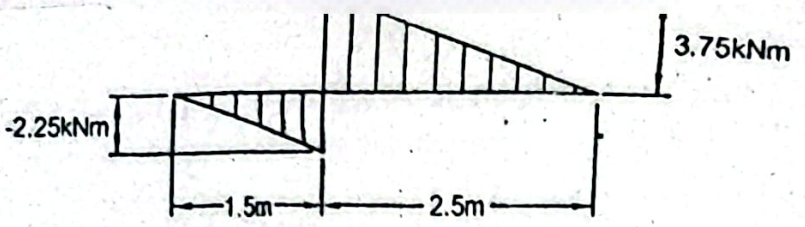

Bending moment diagram

At a section just to the left of C there is negative bending moment and just to the right there is positive bending moment, which can be seen from the bending moment diagram. To find the moment of inertia about the neutral axis a section of the beam is considered as follows.

We have, $\bar{y}A = \sum YA = \bar{y}_1 A_1 + \bar{y}_2 A_2$

or, $\bar{y}(160\times20+160\times20) = 80\times(160\times20)+170\times(160\times20)$

or, $\bar{y} = 125mm$

That is, $c_2 = 125mm$ and $c_1 = (180-125)mm = 55mm$

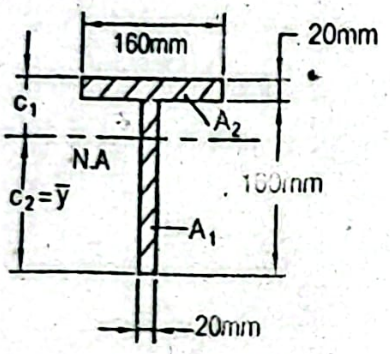

Therefore, the moment of inertia about the neutral axis using transfer formula,

$$I = \frac{1}{12}\times20\times160^3+(160\times20)(125-80)^2+\frac{1}{12}\times160\times20^3+(160\times20)(170-125)^2$$

$$= 19.89\times10^6\ mm^4$$

At a section just to the left of C, the top fiber is in tension and the bottom fiber is in compression. Therefore,

$$\sigma_t = \frac{Mc_1}{I} = \frac{2.25\times10^6\times55}{19.89\times10^6}MPa = 6.22MPa$$

and, $$\sigma_c = \frac{Mc_2}{I} = \frac{2.25\times10^6\times125}{19.89\times10^6}MPa = 14.14MPa$$

At a section just to the right of C, the top fiber is in compression and the bottom fiber is in tension. Therefore,

$$\sigma_c = \frac{Mc_1}{I} = \frac{3.75\times10^6\times55}{19.89\times10^6}MPa = 10.37MPa$$

and, $$\sigma_t = \frac{Mc_2}{I} = \frac{3.75\times10^6\times125}{19.89\times10^6}MPa = 23.57MPa$$

Hence, the maximum tensile stress,

$$\sigma_{t_{max}} = 23.57MPa\ \textit{Answer}$$

and the maximum compressive stress,

$\sigma_{c_{max}} = 14.14MPa$ *Answer*

Problem P4.19:

A W shape $(W250\times115)$ overhanging beam carries a uniformly distributed load of wkN/m including weight of the beam as shown in Figure P4.19. If the limiting normal stress $\sigma_a \le 80MPa$, determine the maximum value of w.

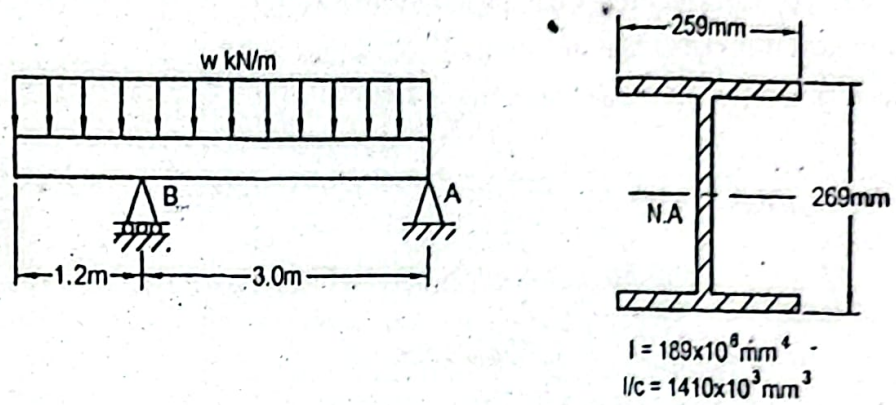

Figure P4.19

Given Data:

Length of beam, $L = 4.2m$

For $W250\times115$, section modulus, $\frac{I}{c} = 1410\times10^3\ mm^3$

Moment of inertia, $I = 189\times10^6\ mm^4$

Limiting normal stress, $\sigma_a \le 80MPa$

To Find:

- Maximum value of w

Solution:

Free body diagram of the entire beam is shown below.

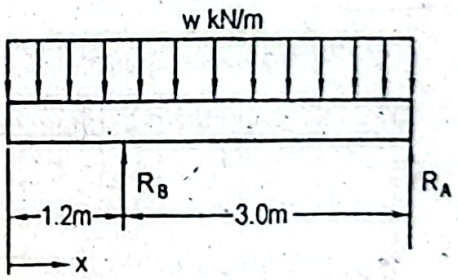

In static equilibrium condition,

$$+\uparrow \sum F_y = 0$$

or, $R_A + R_B - w\times4.2 = 0$

or, $R_A + R_B = 4.2w$

$$+\circlearrowleft \sum M_A = 0$$

or, $w\times4.2\times2.1 - R_B\times3 = 0$

or, $R_B = 2.94w\,kN$

Therefore, $R_A = (4.2w - R_B) = 4.2w - 2.94w = 1.26w\,kN$

Shear force,

For $0 < x < 1.2m$ $\quad V_x = wx\,kN$

At $x = 1.2m$, $\quad V_{x=1.2} = -1.2w\,kN$

For $1.2m < x < 4.2m$ $\quad V_x = -wx + R_B = (-wx + 2.94w)\,kN$

To locate the point of zero shear,

$$V_x = 0 = -wx + 2.94w$$

or, $x = 2.94m$

Shear force and bending moment diagrams are given below.

Bending moment is maximum at the point of zero shear.

We have, $\quad \Delta M = (area)_V$

Therefore, $\quad M_B = -\frac{1}{2} \times 1.2w \times 1.2 = -0.72w\ kNm$

and $M_C = -\frac{1}{2} \times 1.2w \times 1.2 + \frac{1}{2} \times 1.74w \times 1.74$

$= 0.794w\ kNm$

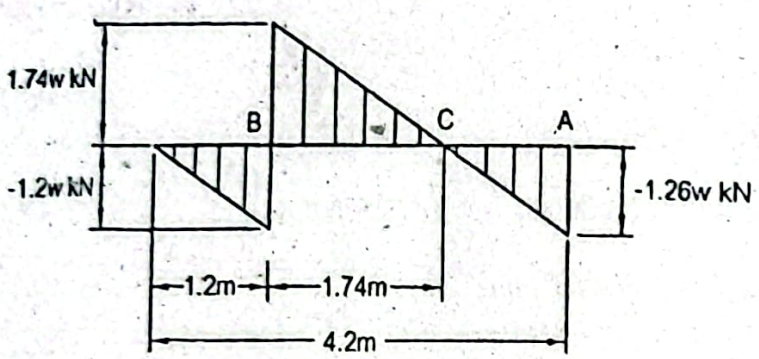

Shear force diagram

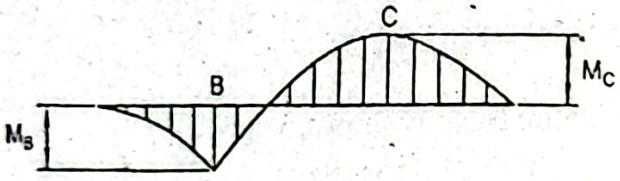

Bending moment diagram

Now using the flexure formula and considering the maximum bending moment we find,

$$\sigma = \frac{M_C \times c}{I} = \frac{M_C}{I/c}$$

$$\text{or, } \sigma_a = 80 = \frac{0.794w \times 10^6}{1410 \times 10^3}$$

$$\text{or, } w = 142.07\,kN/m \quad \textit{Answer}$$

Problem P4.20:

A $5m$ long simply supported beam of $S250 \times 52$ section carries a uniformly distributed load of $w kN/m$ including weight of the beam over its entire length as shown in Figure P4.20. If the allowable stress either in tension or compression is $100MPa$, determine the maximum value of w.

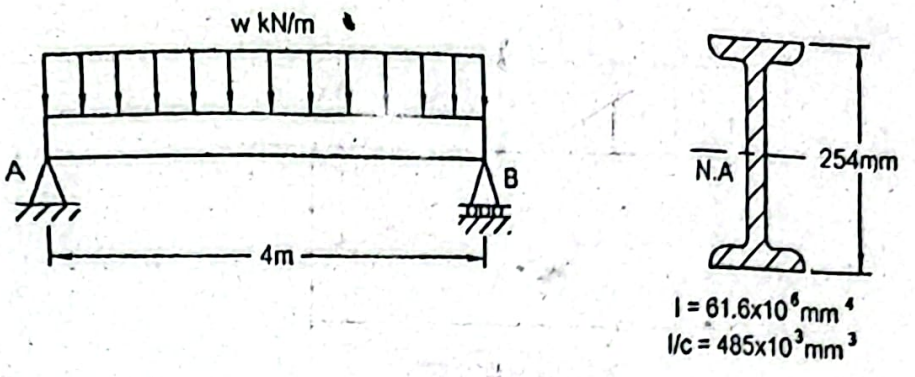

Figure P4.20

en Data:

ngth of beam, $L = 5m$

ction modulus of $S250\times52$ section, $I/c = 485\times10^3\,mm^3$

lowable stress either in tension or compression, $\sigma_a = 100MPa$

Find:

laximum value of w

lution:

e body diagram of the entire beam is shown below.

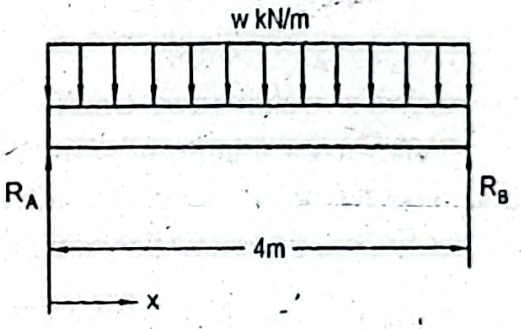

static equilibrium condition,

$$+\uparrow \sum F_y = 0$$

or, $R_A + R_B - w\times4 = 0$

or, $R_A + R_B = 4w$

r the symmetric loading, $R_A = R_B = 2w\,kN$

ear force,

r $0 < x < 1.2m$ $\quad V_x = R_A - wx$

$$= (2w - wx)\,kN$$

locate the point of zero shear,

$$V_x = 0 = 2w - wx$$

or, $x = 2.0m$

hear force and bending moment diagrams are given below.

laximum bending moment occurs at the point of zero shear.

/e have, $\quad \Delta M = (area)_V$

herefore, $\quad M_{max} = \frac{1}{2}\times2w\times2kNm = 2w\,kNm$

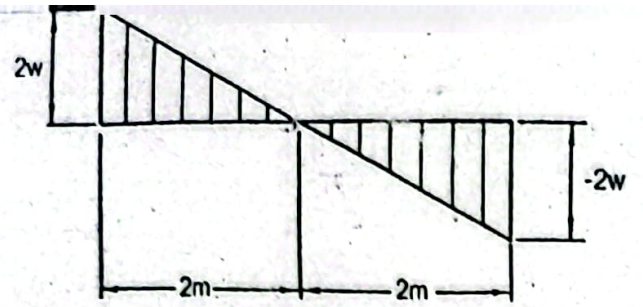

Shear force diagram

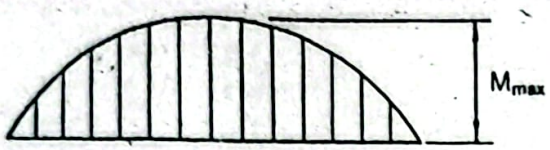

Bending moment diagram

Now using flexure formula, $\sigma = \frac{Mc}{I} = \frac{M_{max}}{I/c}$

$$\text{or, } \sigma_a = 100 = \frac{2w \times 10^6}{485 \times 10^3}$$

$$\text{or, } w = 24.25\,kN/m \quad \textit{Answer}$$

Here w includes the beam weight also.

Problem P4.21:

A simply supported beam is fabricated by welding two $C310 \times 31$ channels back to ba as shown in Figure P4.21. The beam carries a uniformly distributed load of $15kN/$ including its self weight over its entire length and two concentrated loads, each of $30k$ If the limiting normal stress $\sigma_a \le 120MPa$, determine the maximum length of beam.

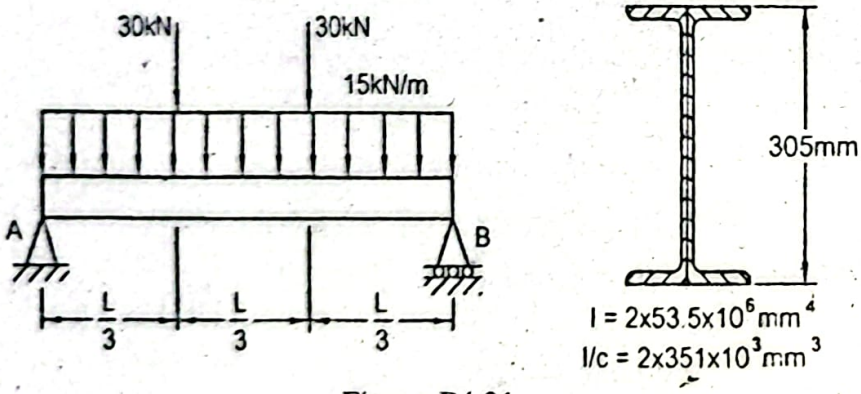

Figure P4.21

Given Data:

Distributed load, $w = 15kN/m$

Concentrated loads $= 30kN$ each

Section modulus, $I/c = 2 \times (352 \times 10^3)\,mm^3$

Limiting normal stress, $\sigma_a \le 120MPa$

To Find:

- Maximum length, L

Solution:

Free body diagram of the entire beam is shown below.

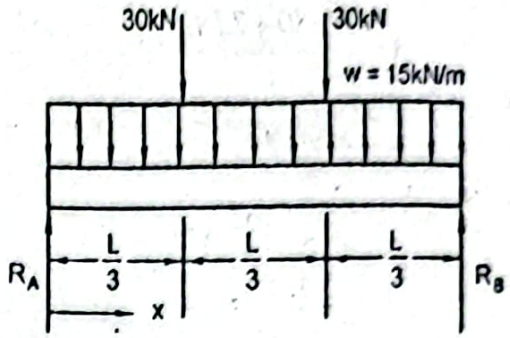

In static equilibrium condition,

$$+\uparrow \sum F_y = 0$$

or, $R_A + R_B - 30 - 30 - w \times L = 0$

or, $R_A + R_B = 60 + wL = 60 + 15L$

For the symmetric loading,

$$R_A = R_B = (30 + 7.5L)kN$$

Shear force,

For $0 < x < L/3m$ $\quad V_x = R_A - wx$

$$= [(30 + 7.5L) - 15x]kN$$

At $x = L/3m$, $\quad V_{x=L/3} = (30 + 2.5L)kN$

For $L/3m < x < 2L/3m$ $\quad V_x = R_A - wx - 30$

$$= (30 + 7.5L) - wx - 30 = (7.5L - 15x)kN$$

At $x = L/3m$, $\quad V_{x=L/3} = 2.5L\ kN$

To locate the point of zero shear,

$$V_x = 0 = 7.5L - 15x$$

or, $x = 0.5Lm$

Shear force and bending moment diagrams are given below.

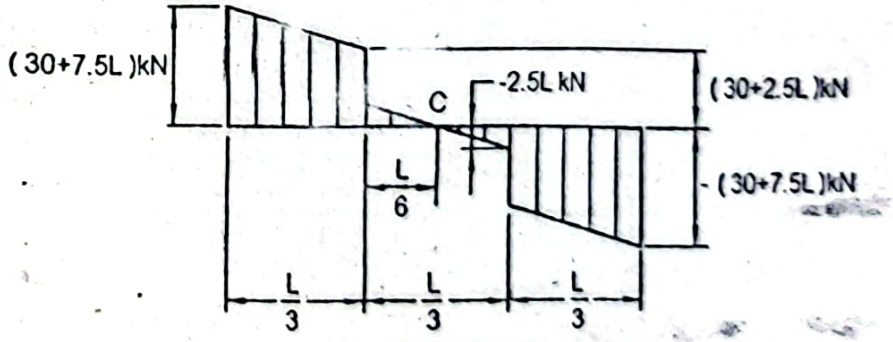

Shear force diagram

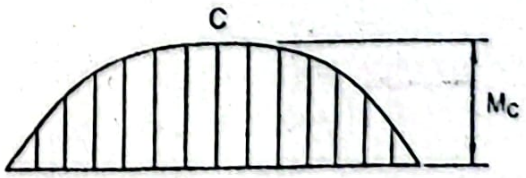

Bending moment diagram

Maximum bending moment occurs at the point of zero shear.

We have, $\Delta M = (area)_V$

Therefore, $M_C = \frac{(30+7.5L)+(30+2.5L)}{2} \times \frac{L}{3} + \frac{1}{2} \times 2.5L \times \frac{1}{6} L$

$= (10L + 1.875L^2)\, kNm$

Now using the flexure formula,

$$\sigma = \frac{M_C \times c}{I} = \frac{M_C}{\frac{I}{c}}$$

$$\text{or, } \sigma_a = 120 = \frac{(10L + 1.875L^2) \times 10^6}{2 \times (351 \times 10^3)}$$

$$\text{or, } 1.875L^2 + 10L - 84.24 = 0$$

$$\text{or, } L = \frac{-10 \pm \sqrt{10^2 + 4 \times 1.875 \times 84.24}}{2 \times 1.875}$$

$$\text{or, } L = 4.55m \text{ Answer}$$

Problem P4.22:

A $8m$ long simply supported beam carries a uniformly distributed load of 20 over its entire length. If the allowable stress either in tension or compression is 13 select the lightest wide flange section (W shape) for this loading. What will be the maximum flexure stress for the beam section selected?

Given Data:

Length of beam, $L = 8m$

Distributed load, $w = 20kN/m$

Allowable stress either in tension or compression, $\sigma_a = 130MPa$

To Find:

- Lightest wide flange section (W shape)
- Actual maximum flexure stress, σ_{max}

Solution:

Free body diagram of the entire beam is shown below.

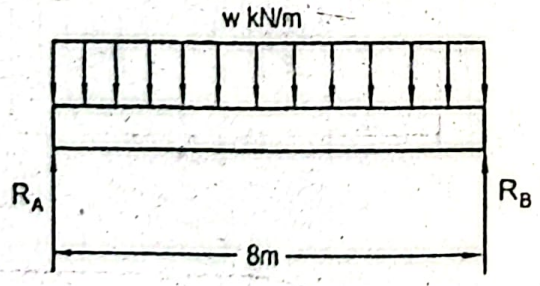

Let w be the distributed load including the beam weight.

For the symmetric loading in static equilibrium condition,

$$R_A = R_B = (8w/2) = 4w\,kN$$

Shear force and bending moment diagrams are given below.

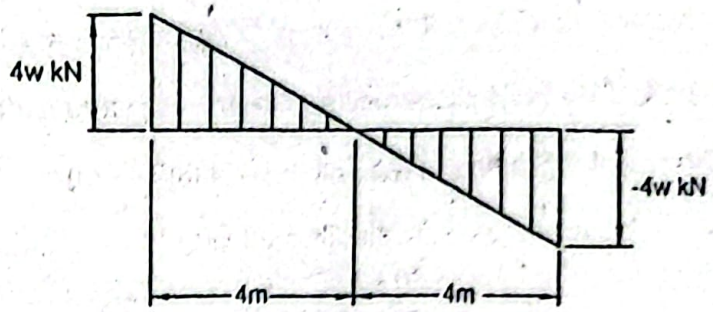

Shear force diagram

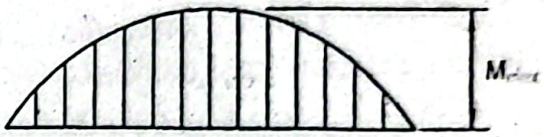

Bending moment diagram

Maximum bending moment occurs at the point of zero shear.

We have, $\Delta M = (area)_V$

Therefore, $M_{max} = \frac{1}{2} 4w \times 4 = 8w\,kNm$

For positive bending moment compression occurs at the top fiber and tension occurs at the bottom fiber. For wide flange section, the distance of the top and bottom extreme fibers is same.

We find from the flexure formula,

$$\sigma = \frac{M_{max} c}{I} = \frac{M_{max}}{I/c}$$

Therefore, section modulus, $\frac{I}{c} = \frac{M_{max}}{\sigma}$

$$\text{or, } \frac{I}{c} = \frac{M_{max}}{\sigma_a} = \frac{8w \times 10^6}{130} \qquad (i)$$

Since the weight of the beam is unknown at the beginning, let us consider only the live load, that is, $w = 20kN/m$.

Substituting in Equation (i), $\frac{I}{c} = \frac{8 \times 20 \times 10^6}{130} mm^3 = 1231 \times 10^3 mm^3$

Now from the table (Appendix 7), we find,

for $W530 \times 66 - 65.7(kg/m) - \frac{I}{c} = 1340 \times 10^3 mm^3$

for $W460 \times 67 - 68.1(kg/m) - \frac{I}{c} = 1320 \times 10^3 mm^3$

for $W410 \times 74 - 74.9(kg/m) - \frac{I}{c} = 1330 \times 10^3 mm^3$

for $W360 \times 79 - 79.3(kg/m) - \frac{I}{c} = 1280 \times 10^3 mm^3$

for $W310 \times 86 - 86.4(kg/m) - \frac{I}{c} = 1280 \times 10^3 mm^3$

for $W250\times101-101.2(kg/m)$ $\frac{I}{c}=1240\times10^3\,mm^3$

From here we see that the lightest one is $W530\times66$ having the weight of the be $65.7kg/m$ and $\frac{I}{c}=1340\times10^3\,mm^3$. So let us try with this one.

Including the weight of the beam the distributed load,

$$w=20+65.7\times9.81\times10^{-3}$$
$$=20.64kN/m$$

Substituting in Equation (i), $\frac{I}{c}=\frac{8\times20.64\times10^6}{130}mm^3=1270\times10^3\,mm^3<1340\times10^3\,mm$

Therefore, $W530\times66$ beam is selected having the lightest weight.

Now the actual maximum flexure stress becomes,

$$\sigma_{max}=\frac{M_{max}}{I/c}=\frac{8\times20.64\times10^6}{1340\times10^3}MPa=123.22MPa$$ Answer

Problem P4.23:

Select the lightest S-section for a $5m$ long simply supported beam subjected to tw concentrated loads, each of $30kN$ applied symmetrically as shown in Figure P4.23 Consider allowable flexural stress either in tension or compression $\sigma_a=140MPa$. Wha is the actual maximum flexure stress for the beam section selected?

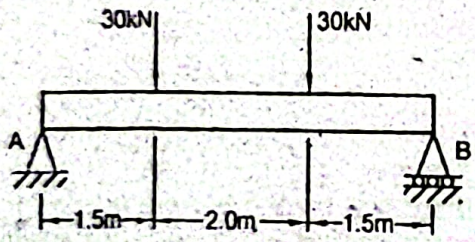

Figure P4.23

Given Data:

Length of beam, $L=5m$

Concentrated load, $P=30kN$ each

Allowable flexural stress, $\sigma_a=140MPa$

To Find:

- Lightest S-section beam
- Actual maximum flexure stress, σ_{max}

Solution:

Free body diagram of the entire beam is shown below.

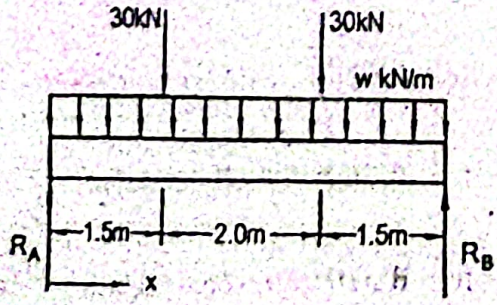

re w is the weight of the beam per unit length. In static equilibrium condition,

$$+\uparrow \sum F_y = 0$$

or, $R_A + R_B - 30 - 30 - w \times 5 = 0$

or, $R_A + R_B = 60 + 5w$

r the symmetric loading,

$$R_A = R_B = (30 + 2.5w)kN$$

ear force,

r $0 < x < 1.5m$ $\quad V_x = R_A - wx$

$$= (30 + 2.5w) - wx$$

$x = 1.5m$, $\quad V_{x=1.5} = 30 + 2.5w - 1.5w = (30 + w)kN$

ear force and bending moment diagrams are given below.

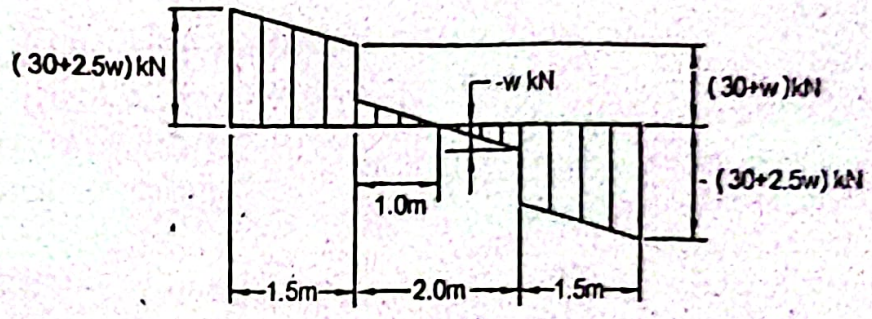

Shear force diagram

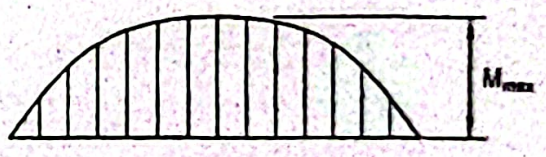

Bending moment diagram

aximum bending moment will occur at the point of zero shear.

e have, $\quad \Delta M = (area)_V$

herefore, $\quad M_{max} = \dfrac{(30 + 2.5w) + (30 + w)}{2} \times 1.5 + \dfrac{1}{2} \times w \times 1.0$

$$= (45 + 3.125w)kNm$$

ne distance of the extreme fibers of S-section from the neutral axis is same. Again the exure stress either in tension of compression is same. Therefore,

$$\sigma = \frac{M_{max} c}{I} = \frac{M_{max}}{I/c}$$

ction modulus, $\quad \dfrac{I}{c} = \dfrac{M_{max}}{\sigma} = \dfrac{M_{max}}{\sigma_a} \dfrac{(45 + 3.125w) \times 10^6}{140}$ $\qquad (i)$

t the beginning let us consider $w = 0$, then from Equation (i),

$$\frac{I}{c} = 321 \times 10^3 mm^3$$

Now from the table we find S-section as,

$S250\times38$ having beam weight of $37.8kg/m$ and $I/c = 405\times10^3 mm^3$

For the section modulus of $321\times10^3 mm^3$, only one close value is obtained.

Distributed load due to the beam weight,

$$w = 37.8\times9.81\times10^{-3} kN/m = 0.37kN/m$$

Now substituting this value in Equation (i) we find,

$$\frac{I}{c} = \frac{(45+3125\times0.37)\times10^6}{140} mm^3 = 330\times10^3 mm^3$$

This value of section modulus is lower than the section modulus of the selected b

Therefore, the required S-section is $S250\times38$ ***Answer***

For this selected beam section, the actual maximum flexure stress,

$$\sigma_{max} = \frac{M_{max}}{I/c} = \frac{(45+3.125\times0.37)\times10^6}{405\times10^3} MPa = 114MPa$$ ***Answe***

Problem P4.24:

A $3.5m$ long cantilever beam fabricated from two channels welded back to back supp a distributed load of $10kN/m$ over its entire length and a concentrated load of $20k$ its mid point. If the allowable stress either in tension or compression is $120MPa$, se the appropriate channel section for this application. Also determine the actual nor maximum stress for the beam section selected.

Given Data:

Length of beam, $L = 3.5m$

Distributed load, $w = 10kN/m$

Concentrated load, $P = 20kN$

Allowable stress either in tension or compression, $\sigma_a = 120MPa$

To Find:

- Appropriate channel section
- Actual normal maximum stress, σ_{max}

Solution:

Free body diagram of the entire beam with the loadings is shown below.

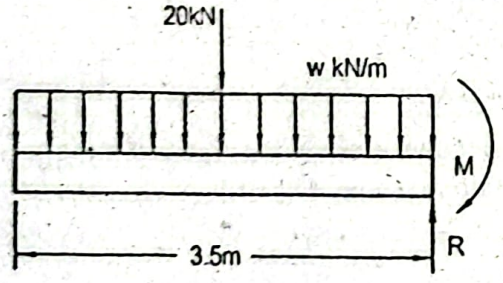

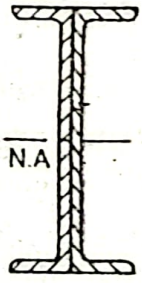

Bending moment for a cantilever beam is maximum at the supporting end, therefore,

$$M_{max} = -\frac{20\times3.5}{2} - \frac{w\times3.5^2}{2}$$

$$= -(35+6.125w) kNm$$

Distance of the extreme fibers at both the top and bottom is same.

rom the flexure formula,

$$\sigma = \frac{M_{max}c}{I} = \frac{M_{max}}{I/c}$$

ection modulus, $$\frac{I}{c} = \frac{M_{max}}{\sigma} = \frac{M_{max}}{\sigma_a}\frac{(35+6.125w)\times 10^6}{120} \qquad (i)$$

he value of the beam weight is unknown at the beginning. Considering $w = 10kN/m$,

$$\frac{I}{c} = \frac{(35+6.125\times 10)\times 10^6}{120} mm^3 = 802\times 10^3 mm^3$$

ince two channels are welded back to back, section modulus of each channel,

$$\frac{I}{c} = 401\times 10^3 mm^3$$

ow from the table we select the appropriate channel $C310\times 45$ for this application. The eight of the beam is $44.7kg/m$ and section modulus is $442\times 10^3 mm^3$.

ow considering the beam weight,

$$w = \left(10 + 2\times 44.7\times 9.81\times 10^{-3}\right) kN/m = 10.88kN/m$$

bstituting this value in Equation (i),

$$\frac{I}{c} = 847\times 10^3 mm^3$$

erefore, the section modulus for each channel,

$= 423\times 10^3 mm^3$, which is less than the section modulus of 442×10^3 of the selected

annel.

erefore, the required selected channel is $C310\times 45$ ***Answer***

ctual maximum normal stress of the selected beam section,

$$\sigma_{max} = \frac{M_{max}}{I/c} = \frac{(35+6.125\times 10.88)\times 10^6}{2\times 442\times 10^3} MPa = 115MPa$$ ***Answer***

oblem P4.25:

overhanging gray cast iron beam of channel section supports a uniformly distributed d of w over its entire length as shown in Figure P4.25. Determine the maximum value w if the allowable stresses in tension and compression are respectively $35MPa$ and $0MPa$.

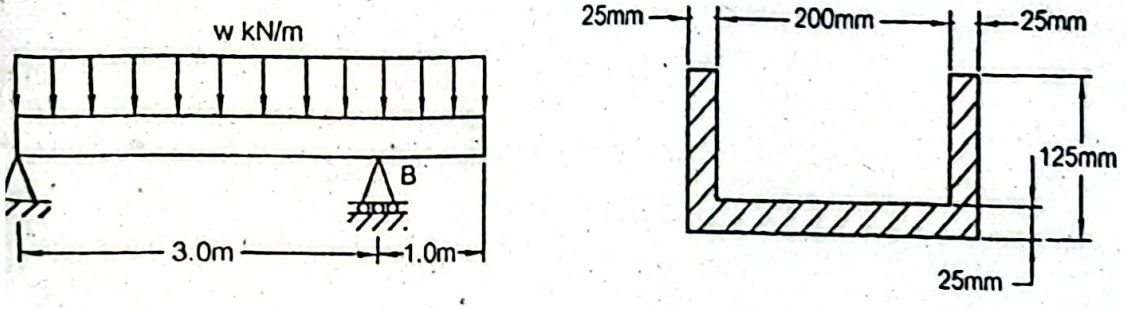

Figure P4.25

Given Data:

Length of beam, $L = 4m$

Distributed load $= w kN/m$

Allowable stress in tension, $\sigma_{t_a} = 35MPa$

Allowable stress in compression, $\sigma_{c_a} = 150MPa$

To Find:

- Maximum value of w.

Solution:

Free body diagram of the entire beam is shown below.

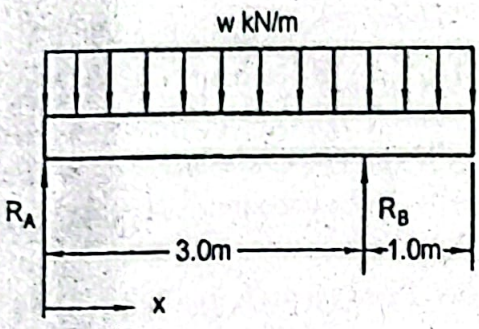

In static equilibrium condition,

$$+\uparrow \sum F_y = 0$$

or, $R_A + R_B - w \times 4 = 0$

or, $R_A + R_B = 4w$

$$+\circlearrowleft \sum M_A = 0$$

or, $R_B \times 3 - w \times 4 \times 2 = 0$

or, $R_B = 2.67w$

Therefore, $R_A = (4w - R_B) = 4w - 2.67w = 1.33w$

Shear force,

For $0 < x < 3m$ $\quad V_x = R_A - wx$

$= (1.33w - wx)kN$

At $x = 0$, $\quad V_{x=0} = 1.33wkN$

At $x = 3m$, $\quad V_{x=3} = (1.33w - w \times 3)kN = -1.67wkN$

To locate the point of zero shear,

$$V_x = 0 = 1.33w - wx$$

or, $x = 1.33m$

Shear force,

For $3m < x < 4m$ $\quad V_x = R_A - wx + R_B = 1.33w - wx + 2.67w$

$= (4w - wx)kN$

Shear force and bending moment diagrams are as follows.

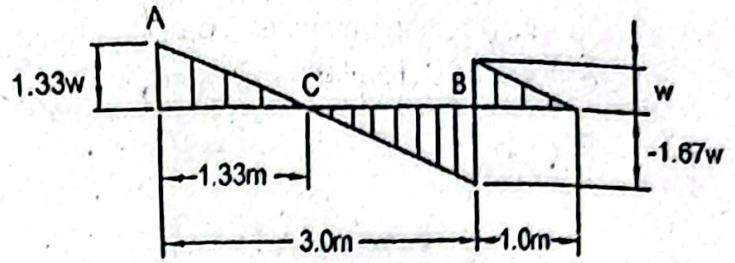

Shear force diagram

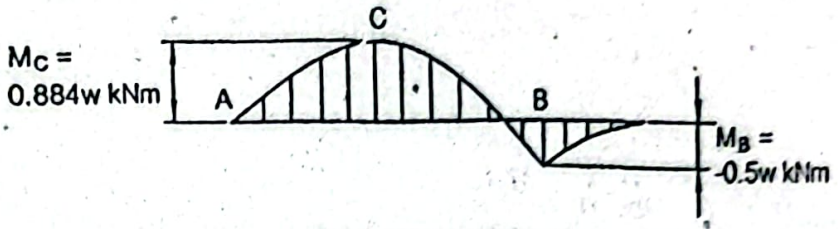

Bending moment diagram

We have, $\Delta M = (area)_v$

Therefore, $M_C = \frac{1}{2} \times 1.33w \times 1.33 = 0.884w\,kNm$

and, $M_B = -\frac{1}{2} \times w \times 1kNm = -0.5kNm$

To find the location of the neutral axis a section of the beam is considered as follows.

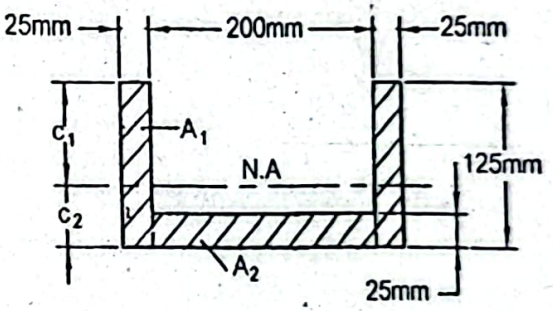

Area, $A = (2 \times 125 \times 25 + 200 \times 25)mm^2 = 11250mm^2$

To find the location of the neutral axis,

$$\bar{y}A = \sum yA = 2\bar{y}_1 A + \bar{y}_2 A$$

or, $\bar{y} \times 11250 = 2 \times \frac{125}{2} \times (125 \times 25) + \frac{25}{2} \times (200 \times 25)$

or, $\bar{y} = 40.28mm$

That is, $c_2 = 40.28mm$

and, $c_1 = (125 - 40.28)mm = 84.72mm$

Moment of inertia about the neutral axis,

$$I = \left[\frac{1}{12} \times 25 \times 125^3 + (125 \times 25)\left(\frac{125}{2} - 40.28\right)\right] \times 2$$

$$+ \frac{1}{12} \times 200 \times 25^3 + (200 \times 25)\left(40.28 - \frac{25}{2}\right)^2$$

$$= 15.34 \times 10^6\, mm^4$$

At the section C for the positive bending moment, compression occurs at the top and tension occurs at the bottom fiber. Therefore, using the flexure formula,

$$\sigma_c = \frac{M_C c_1}{I}$$

$$\text{or, } \sigma_{c_a} = \frac{M_C c_1}{I}$$

$$\text{or, } 150 = \frac{0.884w \times 10^6 \times 84.72}{15.34 \times 10^6}$$

$$\text{or, } w = 30.72\,kN/m$$

$$\text{and } \sigma_t = \frac{M_C c_2}{I}$$

$$\text{or, } \sigma_{t_a} = \frac{M_C c_2}{I}$$

$$\text{or, } 35 = \frac{0.884w \times 10^6 \times 40.28}{15.34 \times 10^6}$$

$$\text{or, } w = 15.08\,kN/m$$

At the section B for the negative bending moment, compression occurs at the bot fiber and tension occurs at the top fiber. Therefore, using the flexure formula,

$$\sigma_t = \frac{M_B c_1}{I}$$

$$\text{or, } \sigma_{t_a} = \frac{M_B c_1}{I}$$

$$\text{or, } 35 = \frac{0.5w \times 10^6 \times 84.72}{15.34 \times 106}$$

$$\text{or, } w = 12.67\,kN/m$$

$$\sigma_c = \frac{M_B c_2}{I}$$

$$\text{or, } \sigma_{c_a} = \frac{M_B c_2}{I}$$

$$\text{or, } 150 = \frac{0.5w \times 10^6 \times 40.28}{15.34 \times 10^6}$$

$$\text{or, } w = 114.25\,kN/m$$

Hence, the required maximum value,

$$w = 12.67\,kN/m \text{ Answer}$$

Problem P4.26:

An overhanging beam of channel section supports a uniformly distributed load o $15kN/m$ and a concentrated load of $15kN$ at its free end as shown in Figure P4.26. Determine the maximum tensile and compressive stresses developed in the beam.

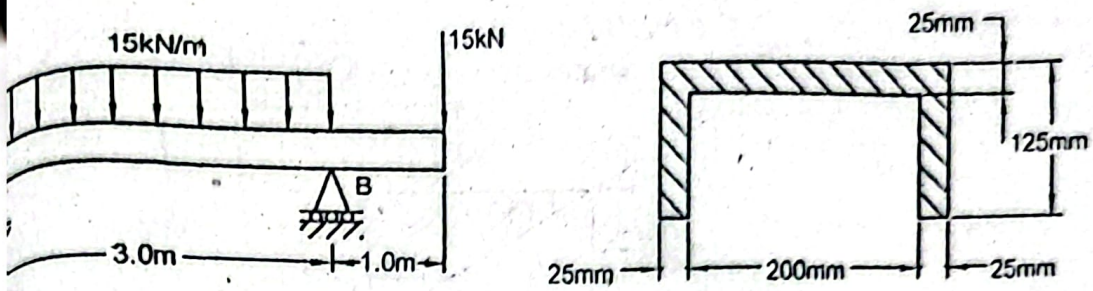

Figure P4.26

Data:

of beam, $L = 4m$

uted load, $w = 15\,kN/m$

ntrated load, $P = 15kN$

id:

imum tensile stress, $\sigma_{t_{max}}$

imum compressive stress, $\sigma_{c_{max}}$

on:

ody diagram of the entire beam is shown below.

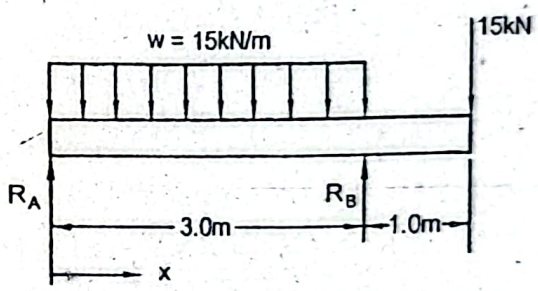

ic equilibrium condition,

$$+\uparrow \sum F_y = 0$$

or, $R_A + R_B - w\times 3 - 15 = 0$

or, $R_A + R_B = 15\times 3 + 15 = 60kN$

$$+\circlearrowleft \sum M_A = 0$$

or, $-15\times 4 + R_B \times 3 - w\times 3\times 1.5 = 0$

or, $R_B = 42.5\,kN$

fore, $R_A = 60 - R_B = (60 - 42.5)\,kN = 17.5kN$

force,

$< x < 3m$ $V_x = R_A - wx$

$= (17.5 - 15x)\,kN$

$= 0$, $V_{x=0} = 17.5kN$

$= 3m$, $V_{x=3} = (17.5 - 15\times 3)\,kN = -27.5kN$

ate the point of zero shear,

$$V_x = 0 = 17.5 - 15x$$

or, $x = 1.167m$

Shear force and bending moment diagrams are as follows.

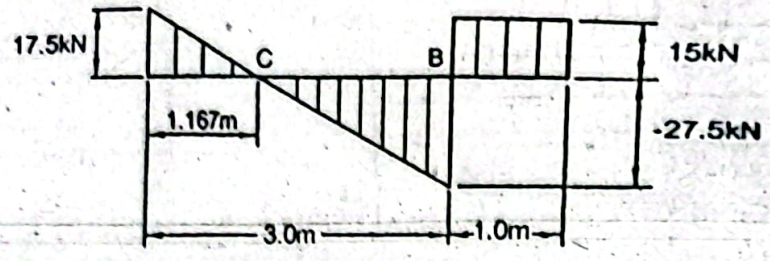

Shear force diagram

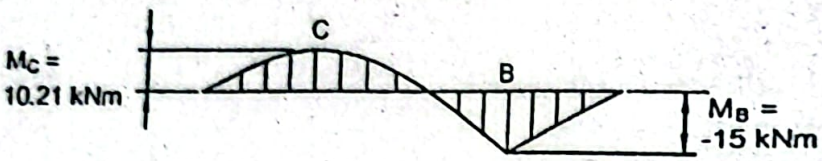

Bending moment diagram

Bending moment will be maximum at the point of zero shear.

We have, $\Delta M = (area)_V$

Therefore, $M_C = \frac{1}{2} \times 17.5 \times 1.167 = 10.21 kNm$

and $M_B = -15.0 \times 1.0 = -15.0 kNm$

Area, $A = (2 \times 125 \times 25 + 200 \times 25)\, mm^2 = 11250 mm^2$

To find the location of the neutral axis a section of the beam is considered as fol

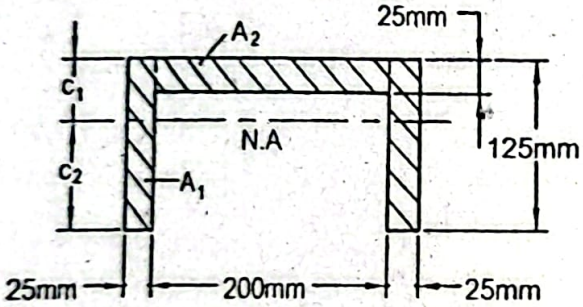

$$\bar{y}A = \Sigma yA = 2\bar{y}_1 A_1 + \bar{y}_2 A_2$$

$$\text{or, } \bar{y} \times 11250 = 2 \times \frac{125}{2} \times (125 \times 25) + \left(125 - \frac{25}{2}\right) \times 20$$

$$\text{or, } \bar{y} = 84.72 mm$$

That is, $c_2 = 84.72 mm$

and, $c_1 = (125 - 84.72)\, mm = 40.28 mm$

Moment of inertia about the neutral axis,

$$I = \left[\frac{1}{12} \times 25 \times 125^3 + (125 \times 25)\left(84.72 - \frac{125}{2}\right)^2\right] \times 2$$

$$+ \frac{1}{12} \times 200 \times 25^3 + (200 \times 25)\left(40.28 - \frac{25}{2}\right)^2$$

$$= 15.34 \times 10^6\ mm^4$$

section C for the positive bending moment, compression occurs at the top fiber and n occurs at the bottom fiber. Therefore, using the flexure formula,

$$\sigma_c = \frac{M_C \times c_1}{I} = \frac{10.21 \times 10^6 \times 40.28}{15.34 \times 10^6} MPa = 26.81MPa$$

$$\text{and, } \sigma_t = \frac{M_C \times c_2}{I} = \frac{10.21 \times 10^6 \times 84.72}{15.34 \times 10^6} MPa = 56.39MPa$$

section B for the negative bending moment, tension occurs at the top fiber and ession occurs at the bottom fiber. Therefore, using the flexure formula,

$$\sigma_t = \frac{M_B \times c_1}{I} = \frac{15 \times 10^6 \times 40.28}{15.34 \times 10^6} MPa = 39.39MPa$$

$$\text{and, } \sigma_c = \frac{M_B \times c_2}{I} = \frac{15 \times 10^6 \times 84.72}{15.34 \times 10^6} MPa = 82.84MPa$$

fore, the maximum tensile stress,

$$\sigma_{t_{max}} = 56.34MPa \textit{ Answer}$$

and it occurs at a distance, $x = 1.167m$.

num compressive stress, $\sigma_{c_{max}} = 82.84MPa$ *Answer*

and it occurs at a distance, $x = 3m$.

em P4.27:

erhanging gray cast iron beam of inverted *T*-section carries a uniformly distributed $w kN/m$ over its entire length as shown in Figure P4.27. Determine the maximum of w if the allowable stresses in tension and compression are respectively $35MPa$ $50MPa$.

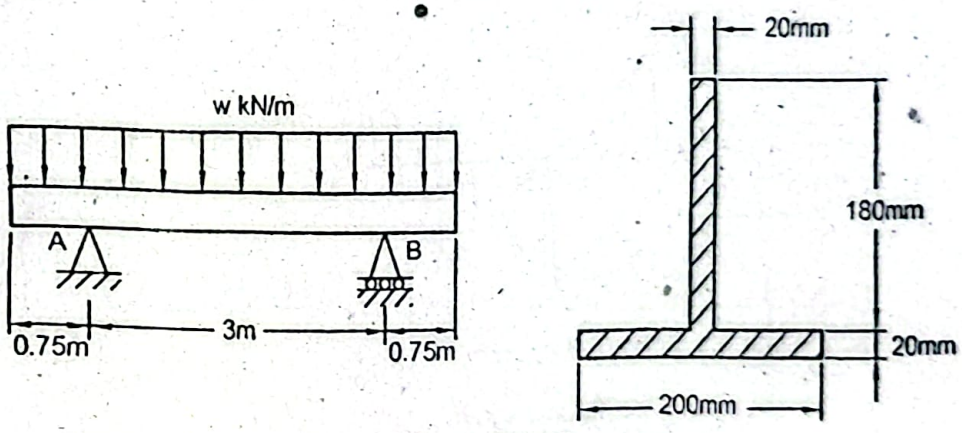

Figure P4.27

n Data:

th of beam, $L = 4.5m$

= Distributed

wable stress in tension, $\sigma_{t_a} = 35MPa$

wable stress in compression, $\sigma_{c_a} = 150MPa$

ind:

tributed load, w

Free body diagram of the entire beam is shown below.

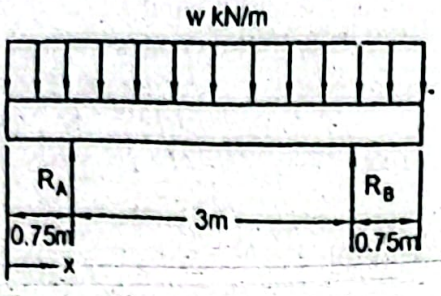

In static equilibrium condition,

$$+\uparrow \sum F_y = 0$$

$$\text{or, } R_A + R_B - w \times 4.5 = 0$$

$$\text{or, } R_A + R_B = 4.5wkN$$

For the symmetric loading,

$$R_A = R_B = 2.25wkN$$

Shear force,

For $0 < x < 0.75m$ $\quad V_x = -wx\,kN$

At $x = 0.75m$, $\quad V_{x=0.75} = -0.75wkN$

For $0.75m < x < 3.75m$ $\quad V_x = -wx + R_A = (-wx + 2.25w)kN$

At $x = 0.75m$, $\quad V_{x=0.75} = -0.75 + 2.25w = 1.5wkN$

To locate the point of zero shear,

$$V_x = 0 = -wx + 2.25w$$

$$\text{or, } x = 2.25m$$

Shear force and bending moment diagrams are given below.

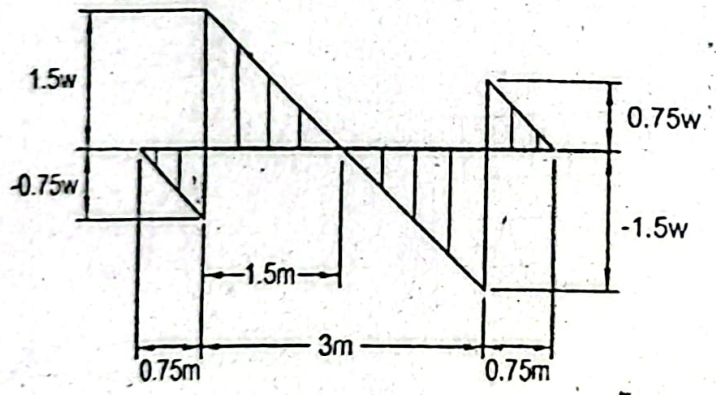

Shear force diagram

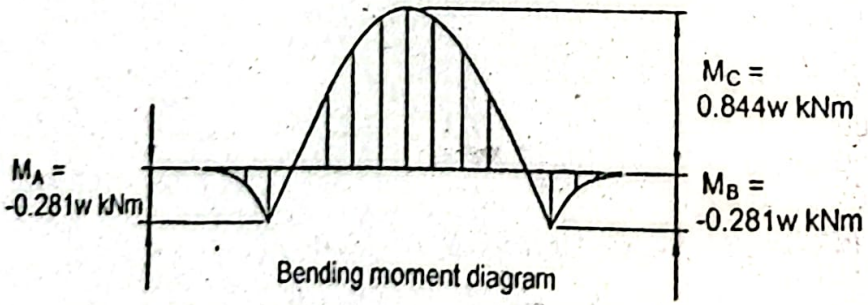

Bending moment diagram

Maximum stress occurs at the point of zero shear.

We have, $\quad \Delta M = (area)_V$

Therefore, $$M_C = -\frac{1}{2}\times 0.75w\times 0.75 + \frac{1}{2}\times 1.5w\times 1.5 = 0.844w\,kNm$$

and $$M_A = -\frac{1}{2}\times 0.75w\times 0.75 = -0.281w\,kNm = M_B$$

To find the location of the neutral axis a section of the beam is taken as follows.

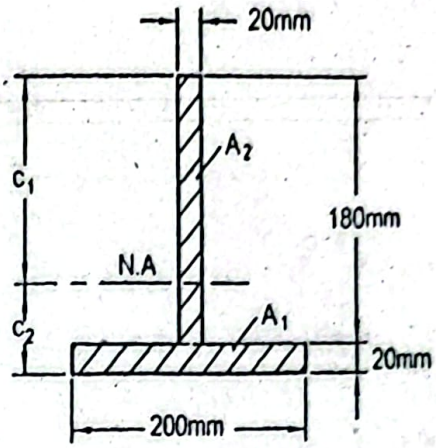

Total area, $$A = A_1 + A_2 = (200\times 20 + 180\times 20)mm^2 = 7600mm$$

To locate the neutral axis,

$$\bar{y}A = \sum yA = \bar{y}_1 A_1 + \bar{y}_2 A_2$$

or, $$\bar{y}\times 7600 = \frac{20}{2}\times 200\times 20 + 110\times 180\times 20$$

or, $$\bar{y} = 57.37mm$$

That is, $$c_2 = 57.37mm$$

and $$c_1 = (200 - 57.37)mm = 142.63mm$$

Moment of inertia about the neutral axis,

$$I = \frac{1}{12}\times 200\times 20^3 + (200\times 20)(57.37-10)^2 + \frac{1}{12}\times 20\times 180^3 + (180\times 20)(110-57.37)^2$$

$$= 28.80\times 10^6\ mm^4$$

At the section C for the positive bending moment, compression occurs at the top fiber and tension occurs at the bottom fiber, therefore, using the flexure formula,

$$\sigma_c = \frac{M_C c_1}{I}$$

or, $$\sigma_{c_a} = \frac{M_C c_1}{I}$$

or, $$150 = \frac{0.844w\times 10^6 \times 142.63}{28.80\times 10^6}$$

or, $$w = 35.89kN/m$$

and $$\sigma_t = \frac{M_C c_2}{I}$$

$$\text{or, } \sigma_{t_a} = \frac{M_C c_2}{I}$$

$$\text{or, } 35 = \frac{0.844w \times 10^6 \times 57.37}{28.80 \times 10^6}$$

$$\text{or, } w = 20.82\,kN/m$$

At the section A for the negative bending moment, tension occurs at the top fiber compression occurs at the bottom fiber, therefore, using the flexure formula,

$$\sigma_t = \frac{M_A c_1}{I}$$

$$\text{or, } \sigma_{t_a} = \frac{M_A c_1}{I}$$

$$\text{or, } 35 = \frac{0.281w \times 10^6 \times 142.63}{28.80 \times 10^6}$$

$$\text{or, } w = 25.15kN/m$$

$$\text{and } \sigma_c = \frac{M_A c_2}{I}$$

$$\text{or, } \sigma_{c_a} = \frac{M_A c_2}{I}$$

$$\text{or, } 150 = \frac{0.281w \times 10^6 \times 57.37}{28.80 \times 10^6}$$

$$\text{or, } w = 267.97kN/m$$

Therefore, the maximum value,

$$w = 20.82kN/m \text{ Answer}$$

Problem P4.28:

A beam of *T*-section supports concentrated loads as shown in Figure P4.28. Find t maximum value of P for the limiting stresses in tension and compression of $30MPa$ a $80MPa$ respectively.

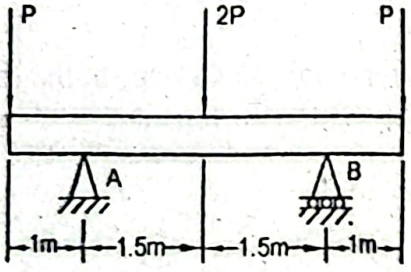

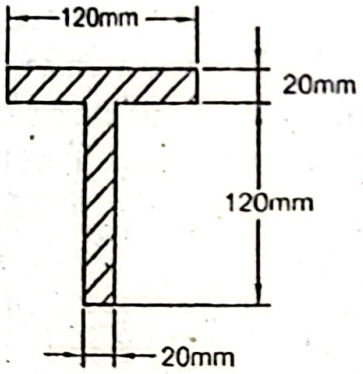

Figure P4.28

Given Data:

Length of beam, $L = 5m$

Concentrated loads $= P, 2P$ and P

Limiting stress in tension, $\sigma_{t_a} = 30MPa$

Limiting stress in compression, $\sigma_{c_a} = 80MPa$

To Find:

- Maximum value of P

Solution:

Free body diagram of the entire beam is shown below.

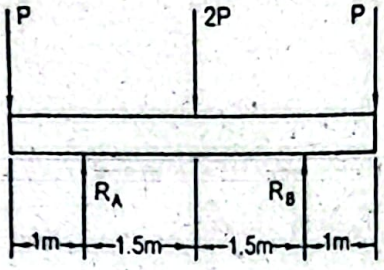

In static equilibrium condition,

$$+\uparrow \sum F_y = 0$$

$$\text{or, } R_A + R_B - P - 2P - P = 0$$

$$\text{or, } R_A + R_B = 4P$$

For the symmetric loading, $R_A = R_B = 2P\,kN$

Shear force and bending moment diagrams are as follows.

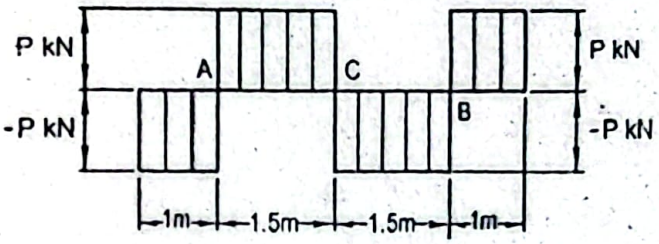

Shear force diagram

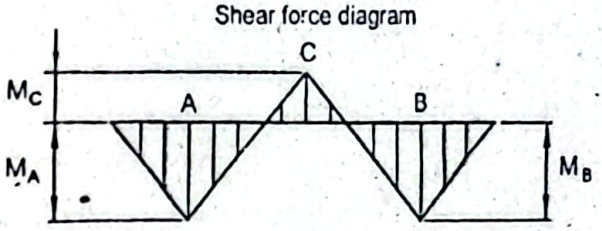

Bending moment diagram

To find the bending moment,

We have, $\Delta M = (area)_y$

Therefore, the bending moments at the sections A and C,

$$M_A = -P \times 1 = -PkNm = M_B$$

$$\text{and, } M_C = -P \times 1.0 + P \times 1.5 = 0.5PkNm$$

To find the location of the neutral axis a section of the beam is taken as follows.

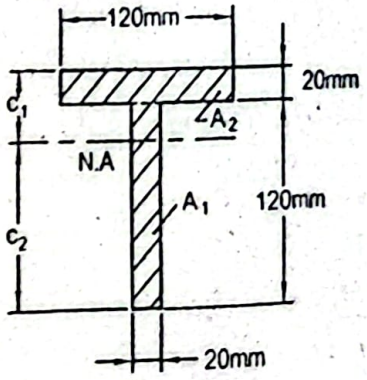

To find the location of the neutral axis,

Area, $A = 120\times20 + 120\times20 = 4800mm^2$

$$\bar{y}A = \sum yA = \bar{y}_1A_1 + \bar{y}_2A_2$$

or, $\bar{y}\times4800 = 60\times(120\times20) + 130\times(120\times20)$

or, $\bar{y} = 95mm$

That is, $c_2 = 95mm$

and, $c_1 = (140-95)mm = 45mm$

Moment of inertia about the neutral axis,

$$I = \frac{1}{12}\times20\times120^3 + (120\times20)(95-60)^2$$
$$+\frac{1}{12}\times120\times20^3 + (120\times20)(130-95)^2$$
$$= 8.84\times10^6\ mm^4$$

For the negative bending moment at the section A, tension occurs at the top fibe compression occurs at the bottom fiber. Therefore, using the flexure formula,

$$\sigma_1 = \frac{M_Ac_1}{I}$$

or, $\sigma_{1_a} = \frac{M_Ac_1}{I}$

or, $30 = \frac{P\times10^6\times45}{8.84\times10^6}$

or, $P = 5.89kN$

and, $\sigma_c = \frac{M_Ac_2}{I}$

or, $\sigma_{c_a} = \frac{M_Ac_2}{I}$

or, $80 = \frac{0.5\times10^6\times95}{8.84\times10^6}$

or, $P = 7.44kN$

For the positive bending moment at the section C, compression occurs at the top fiber tension occurs at the bottom fiber. Therefore, using the flexure formula,

$$\sigma_c = \frac{M_Cc_1}{I}$$

or, $\sigma_{c_a} = \frac{M_Cc_1}{I}$

or, $80 = \frac{0.5P\times10^6\times45}{8.84\times10^6}$

or, $P = 31.43kN$

and, $\sigma_1 = \frac{M_Cc_2}{I}$

$$\text{or, } 30 = \frac{0.5\times10^{6}\times95}{8.84\times10^{6}}$$

$$\text{or, } P = 5.58\,kN$$

ence, the required maximum value,

$$P = 5.58kN \quad \textit{Answer}$$

roblem P4.29:

4m long simply supported beam of isosceles triangular cross-section supports iiformly distributed loads of wkN/m symmetrically at its ends as shown in Figure 4.29. If the tensile or compressive stress is limited to *125MPa* and the shearing stress is mited to $2MPa$, determine the maximum value of the distributed load.

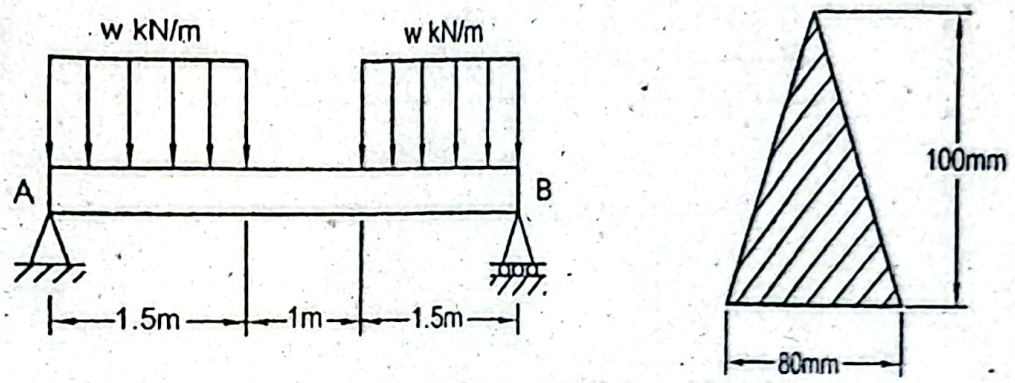

Figure P4.29

iven Data:

ength of beam, $L = 4m$

ltitude of triangle, $h = 100mm$

ase of triangle, $b = 80mm$

)istributed load $= wkN/m$

imiting stress in tension or compression, $\sigma_a = 125MPa$

imiting shearing stress, $\tau_a = 2MPa$

o Find:

Maximum value of w

olution:

ree body diagram of the entire beam is as follows.

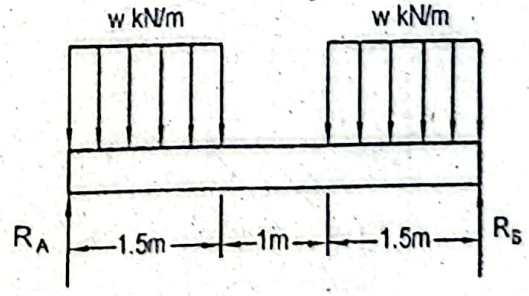

n static equilibrium condition,

$$+\uparrow \sum F_y = 0$$

$$\text{or, } R_A + R_B - w\times 1.5 - w\times 1.5 = 0$$

$$\text{or, } R_A + R_B = 3w$$

For the symmetric loading, $R_A = R_B = 1.5w$

Shear force and bending moment diagrams are given below.

Maximum bending moment occurs at the point of zero shear.

We have, $\Delta M = (\text{area})_v$

Therefore, $M_{max} = \frac{1}{2}\times 1.5w\times 1.5 = 1.125w\,kNm$

Since the bending moment is positive, compression occurs at the top fiber and t
occurs at the bottom fiber. However, the limiting stresses in tension and compress
same.

We know, $\sigma = \frac{M_{max}c_1}{I}$

$$\text{or, } \sigma_a = 125 = \frac{1.125w\times 10^6 \times 2/3\times 100}{\frac{1}{36}\times 80\times 100^3}$$

$$\text{or, } w = 3.70kN/m$$

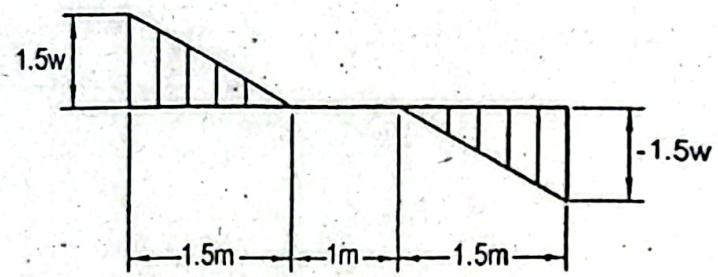

Shear force diagram

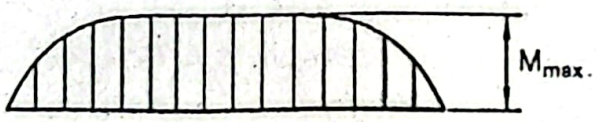

Bending moment diagram

To find the location of the neutral axis a section of the beam is taken as follows.

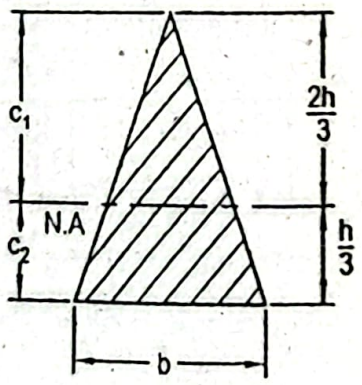

aximum shear force, $V_{max} = 1.5w\ kN$

aximum shearing stress for an isosceles triangle occurs at the half height.

e have, $$\tau_{max} = \frac{3V}{bh} = \frac{3V_{max}}{bh}$$

$$\text{or, } \tau_a = 2.0 = \frac{3\times 1.5w\times 10^3}{80\times 100}$$

$$\text{or, } w = 3.56kN/m$$

erefore, the required maximum value,

$$w = 3.56kN/m \text{ Answer}$$

oblem P4.30:

overhanging gray cast iron beam of inverted *T*-section carries two concentrated loads shown in Figure P4.30. Determine the maximum value of P if the allowable stresses tension and compression are respectively $35MPa$ and $150MPa$.

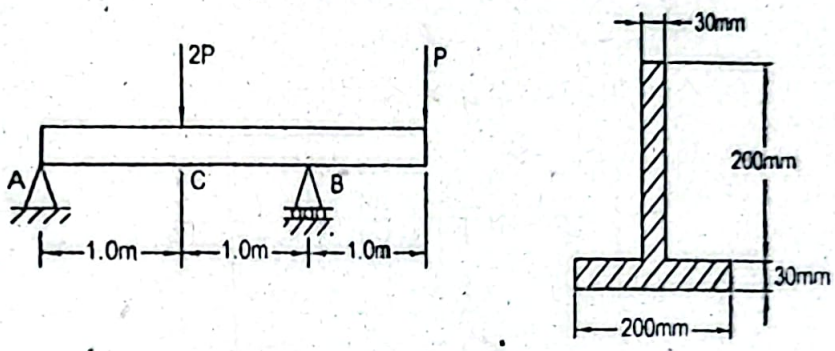

Figure P4.30

ven Data:

ngth of beam, $L = 3m$

ncentrated loads $= P$ and $2P$

lowable stress in tension, $\sigma_{t_a} = 35MPa$

lowable stress in compression, $\sigma_{c_a} = 150MPa$

Find:

Maximum value of P

lution:

e body diagram of the entire beam is shown below.

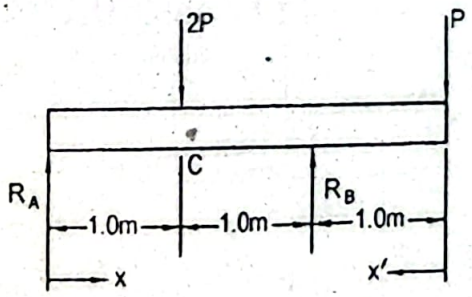

tatic equilibrium condition,

$$+\uparrow \sum F_y = 0$$

$$R_A + R_B - 2P - P = 0$$

$$\text{or, } R_A = 3P - R_B = 3P - 2.5P = 0.5P\,kN$$

$$+\circlearrowleft \sum M_A = 0$$

$$-2P \times 1.0 - P \times 3 + R_B \times 2 = 0$$

$$\text{or, } R_B = 2.5P\,kN$$

Shear force,

For $0 < x < 1.0m$ $\quad V_x = R_A = 0.5P\,kN$

For $1.0m < x < 2.0m$ $\quad V_x = R_A - 2P = 0.5P - 2P = 1.5P\,kN$

For $2.0m < x < 3.0m$ $\quad V_x = R_A - 2P + R_B = 0.5 - 2P + 2.5P = P\,kN$

Bending moment,

For $0 < x < 1.0m$ $\quad M_x = R_A x = 0.5P\,kNm$

At $x = 1.0m$, $\quad M_{x=1.0} = 0.5P \times 1.0 = 0.5P\,kNm$

For $0 < x' < 1.0m$ $\quad M_{x'} = -Px'\,kNm$

At $x' = 1.0m$, $\quad M_{x'=1.0} = -P \times 1.0 = -P\,kNm$

Shear force and bending moment diagrams are as follows.

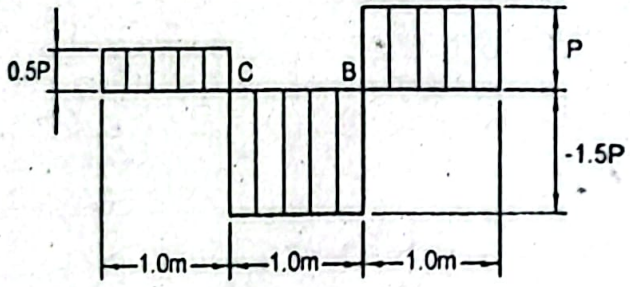

Shear force diagram

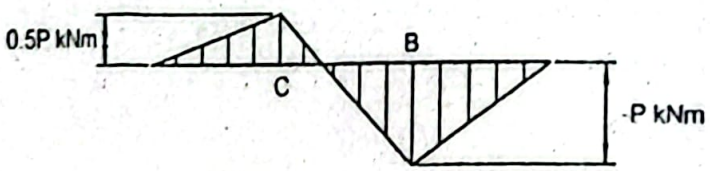

Bending moment diagram

To find the location of the neutral axis a section of the beam is taken as follows.

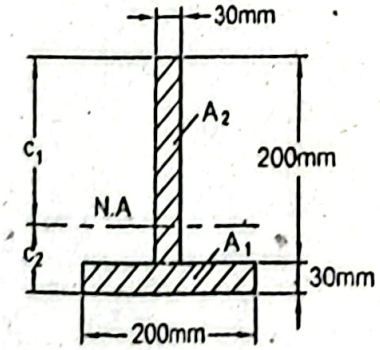

$$\bar{y}A = \sum yA = \bar{y}_1 A_1 + \bar{y}_2 A_2$$

$$\text{or, } \bar{y} \times (200 \times 30 + 200 \times 30) = 15 \times (200 \times 30) + 130 \times (200 \times 30)$$

$$\text{or, } \bar{y} = 72.5mm$$

That is, $\quad c_2 = 72.5mm$

and, $c_1 = (230 - 72.5)mm = 157.5mm$

Moment of inertia about the neutral axis,

$$I = \frac{1}{12} \times 200 \times 30^3 + (200 \times 30)(72.5 - 15)^2 + \frac{1}{12} \times 300 \times 200^3 + (200 \times 30)(130 - 72.5)^2$$

$$= 60.125 \times 10^6 \, mm^4$$

At the section B, tension occurs at the top fiber and compression occurs at the bottom fiber, therefore, using the flexure formula,

$$\sigma_t = \frac{M_B c_1}{I}$$

or, $\sigma_{t_a} = \frac{M_B c_1}{I}$

or, $35 = \frac{P \times 10^6 \times 157.5}{60.125 \times 10^6}$

or, $P = 13.36 \, kN$

and, $\sigma_c = \frac{M_B c_2}{I}$

or, $\sigma_{c_a} = \frac{M_B c_2}{I}$

or, $150 = \frac{P \times 10^6 \times 72.5}{60.125 \times 10^6}$

or, $P = 124.40 \, kN$

At the section C, compression occurs at the top fiber and tension occurs at the bottom fiber, therefore, using the flexure formula,

$$\sigma_c = \frac{M_C c_1}{I}$$

or, $\sigma_{c_a} = \frac{M_C c_1}{I}$

or, $150 = \frac{0.5P \times 10^6 \times 157.5}{60.125 \times 10^6}$

or, $P = 114.52 \, kN$

and, $\sigma_t = \frac{M_C c_2}{I}$

or, $\sigma_{t_a} = \frac{M_C c_2}{I}$

or, $35 = \frac{0.5P \times 10^6 \times 72.5}{60.125 \times 10^6}$

or, $P = 58.05 kN$

Therefore, the required maximum value, $P = 13.36 \, kN$ *Answer*

Problem P4.31:
A simply supported gray cast iron beam of inverted *T*-section carries a trian distribution of load with maximum value of $20kN/m$ as shown in Figure P Determine the value of width b so that the limiting stresses reach simultaneously a extreme fibers. Consider allowable stress in tension $\sigma_{t_a} = 35MPa$ and tha compression $\sigma_{c_a} = 140MPa$.

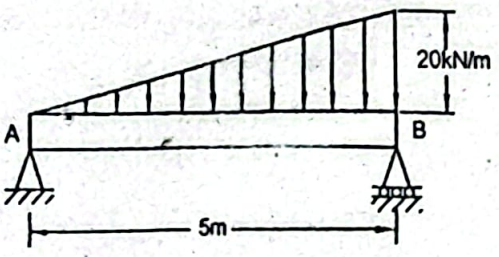

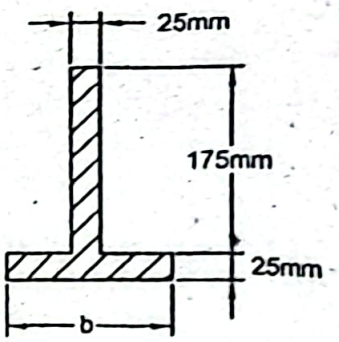

Figure P4.31

Given Data:
Length of beam, $L = 5m$
Load = Triangular distribution with maximum value of $20kN/m$
Allowable stress in tension, $\sigma_{t_a} = 35MPa$
Allowable stress in compression, $\sigma_{c_a} = 140MPa$

To Find:
- Value of width, b

Solution:
Free body diagram of the entire beam is given below.

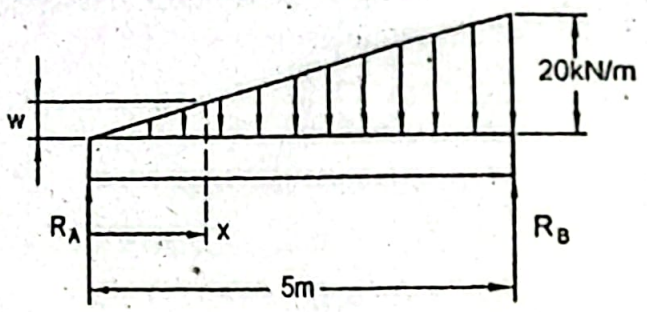

In static equilibrium condition,

$$+\uparrow \sum F_y = 0$$

$$\text{or, } R_A + R_B - \frac{1}{2}\times 20\times 5 = 0$$

$$\text{or, } R_A + R_B = 50$$

$$+\circlearrowleft \sum M_A = 0$$

$$\text{or, } R_B \times 5 - \frac{1}{2}\times 20\times 5\times \frac{2}{3}\times 5 = 0$$

$$\text{or, } R_B = 33.33kN$$

Therefore, $R_A = 50 - R_B = (50 - 33.33)kN = 16.67kN$

Shear force,

For $0 < x < 5.0m$ $V_x = R_A - \frac{1}{2}wx = \left(16.67 - \frac{1}{2}wx\right)kN$

We have from the similar triangles,

$$\frac{w}{x} = \frac{20}{5}$$

or, $w = 4x$

Substituting the value of w, $V_x = (16.67 - 2x^2)kN$

At $x = 0$, $V_{x=0} = 16.67kN$

At $x = 5m$, $V_{x=5} = 16.67 - 2\times5^2 = -33.33kN$

To find the location of zero shear,

$$V_x = 0 = 16.67 - 2x^2$$

or, $x = 2.887m$

Bending moment, $M_x = R_A x - \frac{1}{2}wx\frac{1}{3}x$

$$= 16.67x - \frac{wx^2}{6}$$

$$= 16.67x - \frac{2}{3}x^3 \quad \text{(Substituting value of } w\text{)}$$

Maximum bending moment occurs at the point of zero shear.

Therefore, $M_{x=2.887} = M_{max} = 16.67\times2.887 - \frac{2}{3}\times2.887^3 = 32.085kNm$

Shear force and bending moment diagrams are as follows.

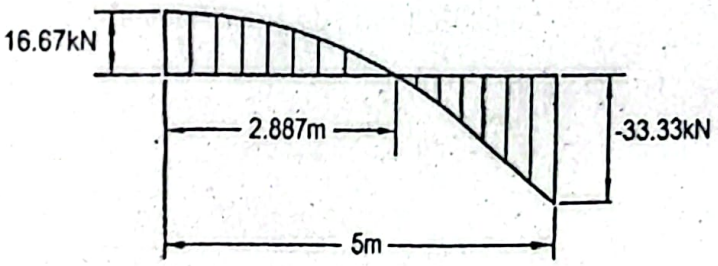

Shear force diagram

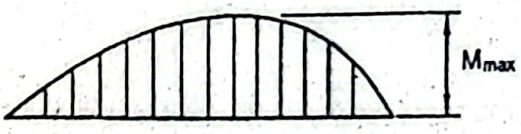

Bending moment diagram

To find the location of the neutral axis a section of the beam is taken as follows. For the positive bending moment, compression occurs at the top fiber while tension occurs at the bottom fiber and the limiting stresses reach simultaneously at the extreme fibers, therefore, we can find a relation as,

$$\frac{c_1}{c_2} = \frac{\sigma_{c_a}}{\sigma_{t_a}}$$

or, $\frac{c_1}{c_2} = \frac{140}{35}$ or, $c_1 = 4c_2$

Again, $c_1 + c_2 = 175 + 25 = 200$

Therefore, $c_1 + 4c_2 = 200$

or, $c_2 = 40mm$

and, $c_1 = (200 - 40)mm = 160mm$

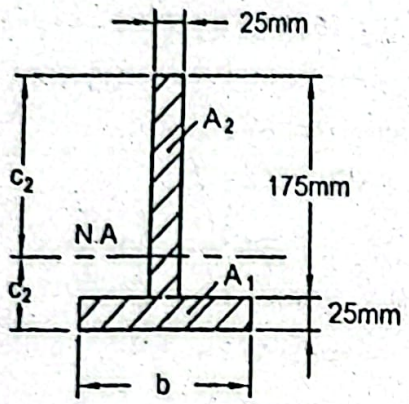

Moment of inertia about the neutral axis,

$$I = \frac{1}{12} \times b \times 25^3 + (b \times 25)\left(40 - \frac{25}{2}\right)^2$$

$$+ \frac{1}{12} \times 25 \times 175^3 + (175 \times 25)(112.5 - 40)^2$$

$$= \left[20208.33b + 34.16 \times 10^6\right] mm^4$$

Using the flexure formula at the top fiber,

$$\sigma_c = \frac{M_{max} c_1}{I}$$

or, $\sigma_{c_a} = 140 = \frac{32.085 \times 10^6 \times 160}{20208.33b + 34.16 \times 10^6}$

or, $b = 124.14mm$ *Answer*

Problem P4.32:

A $3m$ long cast iron cantilever beam of T-section supports a concentrated load of 40 at its free end as shown in Figure P4.32. Find the thickness t and the flange width b that the limiting stresses reach at the extreme fibers simultaneously. Also determine maximum shearing stress τ_{max} and the shearing stress at a point just below the flan Consider allowable stress in tension $\sigma_{t_a} = 35MPa$ and that in compressi $\sigma_{c_a} = 120MPa$.

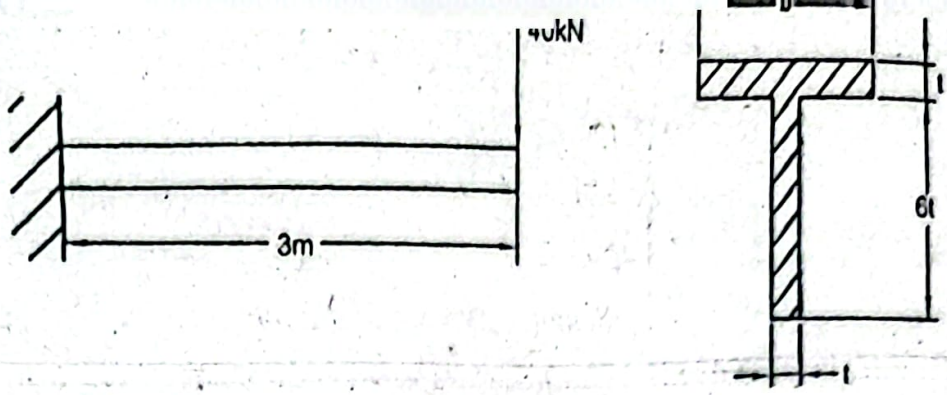

Figure P4.32

Given Data:

Length of beam, $L = 3m$

Concentrated load, $P = 40kN$

Allowable stress in tension, $\sigma_{t_a} = 35MPa$

Allowable stress in compression, $\sigma_{c_a} = 120MPa$

To Find:

Thickness, t

Flange width, b

Maximum shearing stress, τ_{max}

Shearing stress at a point just below flange, τ

Solution:

For the cantilever beam with a concentrated load, the maximum bending moment occurs at the supporting end, therefore, maximum bending moment becomes,

$$M_{max} = -40 \times 3kNm = -120kNm$$

For this loading, shear force is constant over the entire length of the beam and this shear force,

$$V = 40kN = V_{max}$$

Now to find the location of the neutral axis a section of the beam is taken as follows.

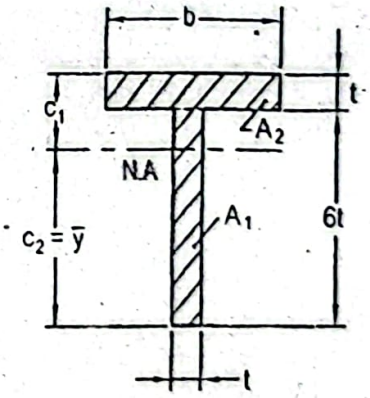

Where the top fiber is in tension and the bottom fiber is in compression. For the limiting stresses to be reached at the extreme fibers simultaneously, we can write,

$$\frac{c_1}{c_2} = \frac{\sigma_{t_a}}{\sigma_{c_a}}$$

$$\text{or, } \frac{c_1}{c_2} = \frac{35}{120}$$

$$\text{or, } c_2 = 3.429c_1$$

We have, $c_1 + c_2 = 7t$

Therefore, $c_1 + 3.429c_1 = 7t$

$$\text{or, } c_1 = 1.58t\ mm \quad \text{and} \quad c_2 = 5.42t\ mm$$

To find location of the neutral axis,

$$\bar{y}A = \sum yA = \bar{y}_1 A_1 + \bar{y}_2 A_2$$

$$\text{or, } 5.42t \times (6t \times t + b \times t) = 3t \times (6t \times t) + 6.5t \times (b \times t)$$

Writing, $b = xt$

$$5.42t \times (6t \times t + xt \times t) = 3t \times (6t \times t) + 6.5t \times (xt \times t)$$

$$\text{or, } 32.52 + 5.42x = 18 + 6.5x$$

$$\text{or, } x = 13.44, \text{ that is, } b = 13.44t\ mm$$

Moment of inertia about the neutral axis,

$$I = \frac{1}{12} \times t \times (6t)^3 + (6t \times t)(5.4t - 3t)^2$$

$$+ \frac{1}{12} \times 13.44t \times t^3 + (13.44t \times t)(6.5t - 5.42t)^2$$

$$= 69.93t^4\ mm^4$$

Using the flexure formula, $\sigma_1 = \frac{M_{max} c_1}{I}$

$$\text{or, } \sigma_{1a} = 35 = \frac{120 \times 10^6 \times 1.58t}{69.93t^4}$$

$$\text{or, } t = 42.63mm \textit{ Answer}$$

That is, $b = 13.44t = 13.44 \times 42.63mm = 572.95mm$ ***Answer***

To find the maximum shearing stress a section of the beam is considered as follows.

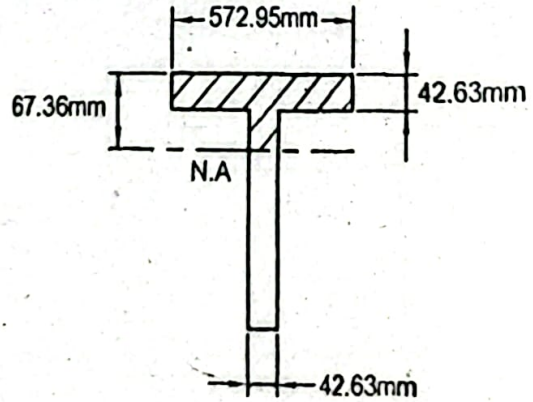

$$\tau_{max} = \frac{V}{Ib} \int_0^{67.36} ydA$$

$$= \frac{V}{Ib} \left[572.95 \int_0^{67.36} ydy - 530.32 \int_0^{24.73} ydy \right]$$

$$= \frac{40\times10^3}{69.93\times(42.63)^4\times42.63}\left[572.95\times\frac{y^2}{2}\right]_0^{67.36} - \frac{40\times10^3}{69.93\times(42.63)^4\times42.63}\left[530.32\frac{y^2}{2}\right]_0^{24.73}$$

$$= 4.62MPa \text{ Answer}$$

Now to find the shearing stress at a point just below the flange a section of the beam is considered as follows.

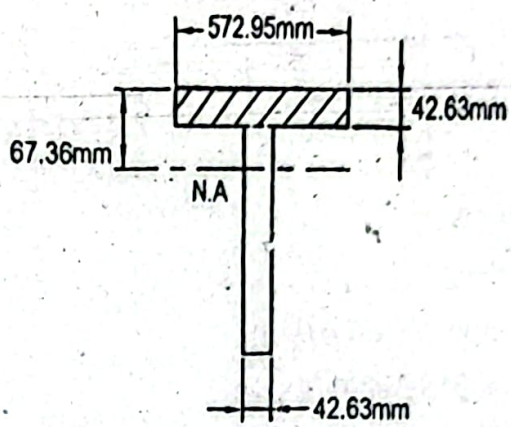

hearing stress,

$$\tau = \frac{V}{Ib}\int_{24.73}^{67.36} ydA$$

$$= \frac{V}{Ib}\times572.95\int_{24.73}^{67.36} ydy$$

$$= \frac{40\times10^3}{69.93\times(42.63)^4\times42.63}\times572.95\left[\frac{y^2}{2}\right]_{24.63}^{67.36}$$

$$= 4.57MPa \text{ Answer}$$

roblem P4.33:

simply supported beam of channel section carries a uniformly distributed load of $5kN/m$ and a concentrated load of $30kN$ as shown in Figure P4.33. Determine the aximum flexure stresses in tension and compression. Also determine the maximum earing stress.

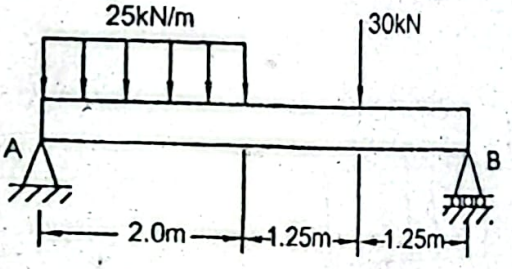

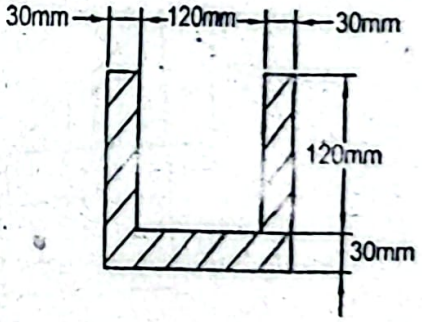

Figure P4.33

ven Data:

ngth of beam, $L = 4.5m$

iformly distributed load, $w = 25kN/m$

ncentrated load, $= 30kN$

Find:

laximum flexure stress in tension, $\sigma_{t_{max}}$

laximum flexure stress in compression, $\sigma_{c_{max}}$

- Maximum shearing stress, τ_{max}

Solution:

Free body diagram of the entire beam is shown below.

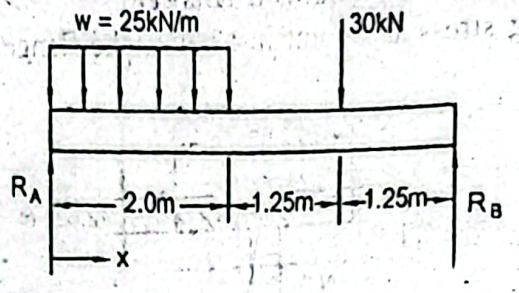

In static equilibrium condition,

$$+\uparrow \sum F_y = 0$$

or, $R_A + R_B - w \times 2 - 30 = 0$

or, $R_A + R_B = 25 \times 2 + 30 = 80$

$$+\circlearrowleft \sum M_A = 0$$

or, $R_B \times 4.5 - 30 \times 3.25 - w \times 2 \times 1 = 0$

or, $R_B \times 4.5 - 30 \times 3.25 - 25 \times 2 \times 1 = 0$

or, $R_B = 32.778\,kN$

Therefore, $R_A = 80 - R_B = (80 - 32.778)\,kN = 47.222\,kN$

Shear force,

For $0 < x < 2m$ $V_x = R_A - wx = (47.222 - 25x)\,kN$

To locate the point of zero shear,

$$V_x = 0 = 47.222 - 25x$$

or, $x = 1.889m$

At $x = 2.0m$, $V_{x=2} = 47.222 - 25 \times 2 = -2.778\,kN$

Shear force and bending moment diagrams are given as follows.

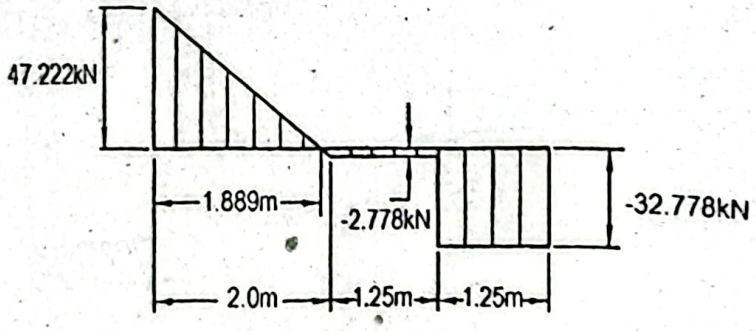

Shear force diagram

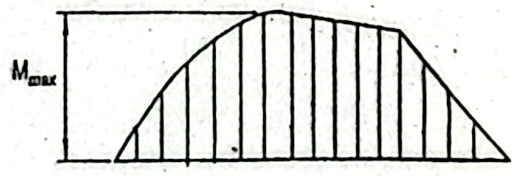

Bending moment diagram

Bending moment is maximum at the point of zero shear.

We have,

Therefore, $M_{max} = \frac{1}{2} \times 47.222 \times 1.889 kNm = 44.60 kNm$

To find the location of the neutral axis a section of the beam is taken as follows.

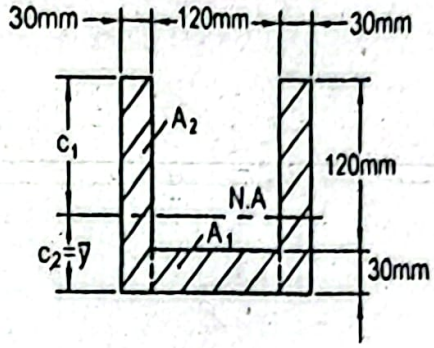

We have, $\bar{y}A = \sum yA = \bar{y}_1 A_1 + 2\bar{y}_2 A_2$

or, $\bar{y} \times (120 \times 30 + 150 \times 30 \times 2) = 15 \times 120 \times 30 + 2 \times 75 \times (150 \times 30)$

or, $\bar{y} = 57.86 mm = c_2$

Therefore, $c_1 = (150 - 57.86) mm = 92.14 mm$

Moment of inertia about the neutral axis,

$$I = \frac{1}{12} \times 120 \times 30^3 + (120 \times 30)(57.86 - 15)^2 + 2\left[\frac{1}{12} \times 30 \times 150^3 + (150 \times 30)(75 - 57.86)^2\right]$$

$$= 26.40 \times 10^6 \ mm^4$$

For the positive bending moment the top fiber is in compression and the bottom fiber is in tension. Therefore, using the flexure formula,

$$\sigma_{c_{max}} = \frac{M_{max} c_1}{I} = \frac{44.60 \times 10^6 \times 92.14}{26.40 \times 10^6} MPa = 155.66 MPa \ \textbf{Answer}$$

and $\sigma_{t_{max}} = \frac{M_{max} c_2}{I} = \frac{44.60 \times 10^6 \times 57.86}{26.40 \times 10^6} MPa = 97.75 MPa \ \textbf{Answer}$

Now to find the maximum shearing stress, a section of the beam is considered as follows.

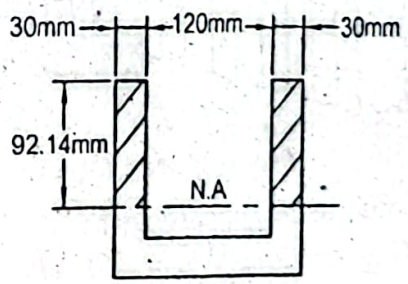

Shearing stress is maximum at the neutral axis. Therefore,

$$\tau_{max} = \frac{V_{max}}{Ib} \int_0^{92.14} ydA = \frac{V_{max}}{Ib} \times 2 \times 30 \times \int_0^{92.14} ydy$$

$$= \frac{47.222 \times 10^3}{26.40 \times 10^6 \times (2 \times 30)} \times 2 \times 30 \times \left[\frac{y^2}{2}\right]_0^{92.14} = 7.59 MPa \ \textbf{Answer}$$

Problem P4.34:

A cantilever cast iron beam of *T*-section carries a concentrated load of *30kN* at its end as shown in Figure P4.34. If the allowable stresses in tension and compression respectively *40MPa* and *100MPa*, determine the thickness *t* and the flange width that the limiting stresses reach at the extreme fibers simultaneously.

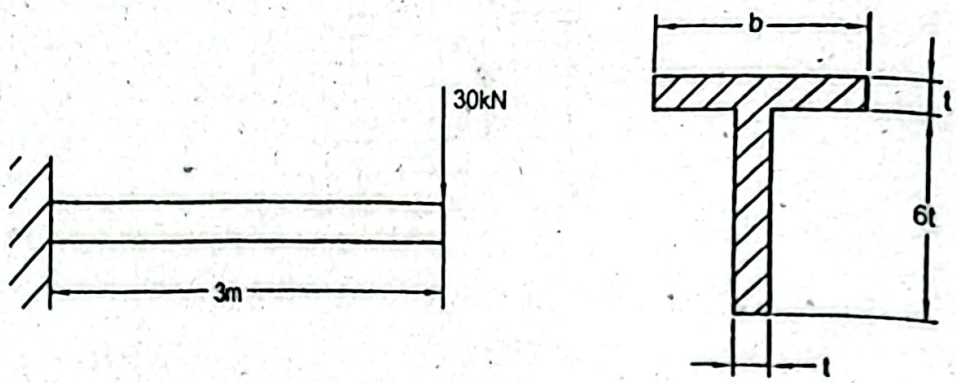

Figure P4.34

Given Data:

Length of beam, $L = 3m$

Concentrated load, $P = 30kN$

Allowable stress in tension, $\sigma_{t_a} = 40MPa$

Allowable stress in compression, $\sigma_{c_a} = 100MPa$

To Find:

- Thickness, t
- Flange width, b

Solution:

Shear force and bending moment diagrams are given below.

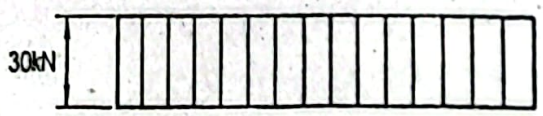

Shear force diagram

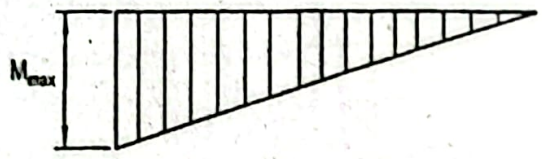

Bending moment diagram

Maximum bending moment occurs at the supporting end.

Therefore, $M_{max} = -30 \times 3kNm = -90kNm$

To find the location of the neutral axis a section of the beam is taken as follows. For negative bending moment, tension occurs at the top fiber and compression occurs at bottom fiber. Therefore, we may write,

$$\frac{\sigma_{t_a}}{\sigma_{c_a}} = \frac{c_1}{c_2}$$

$$100 \quad c_2$$

$$\text{or, } c_2 = 2.5c_1$$

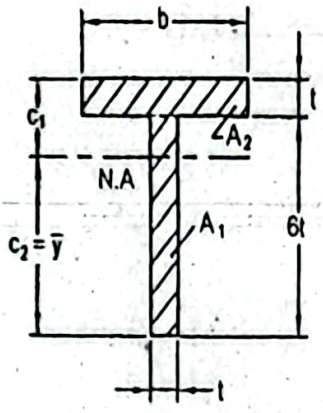

We have, $c_1 + c_2 = 6t + t = 7t$

Therefore, $c_1 + 2.5c_1 = 7t$

$$\text{or, } c_1 = 2t\,mm$$

$$\text{and, } c_2 = (7t - 2t) = 5t\,mm$$

We have, $\bar{y}A = \sum yA = \bar{y}_1 A_1 + \bar{y}_2 A_2$

$$\text{or, } 5t \times (6t \times t + b \times t) = 3t \times (6t \times t) + 6.5t \times (b \times t)$$

Writing $b = xt$ we find, $5tx(6t \times t + xt \times t) = 3t \times (6t \times t) + 6.5t(x + xt)$

$$\text{or, } 30 + 5x = 18 + 6.5x$$

$$\text{or, } x = 8$$

That is, $b = xt = 8t\,mm$

Now to find the moment of inertia about the neutral axis,

$$I = \frac{1}{12} \times t \times (6t)^3 + (6t \times t)(5t - 3t)^2 + \left[\frac{1}{12} \times 8t \times t^3 + (8t \times t)(6.5t - 5t)^2\right]$$

$$= 60.67t^4\ mm^4$$

Using the flexure formula, $\sigma_1 = \frac{M_{max} c_1}{I}$

$$\text{or, } \sigma_{1a} = 40 = \frac{90 \times 10^6 \times 2t}{60.67t^4}$$

$$\text{or, } t = 42.02mm \text{ Answer}$$

Therefore, the flange width, $b = 8t = 8 \times 42.02mm = 336.13mm$ **Answer**

Problem P4.35:

A simply supported cast iron beam of inverted *T*-section carries a uniformly distributed load of $20kN/m$ over its entire length and a concentrated load of $20kN$ at the mid point of the beam as shown in Figure P4.35. If allowable stresses in tension and compression are respectively $35MPa$ and $120MPa$, determine the thickness t and the flange width b so that the limiting stresses occur at the extreme fibers simultaneously.

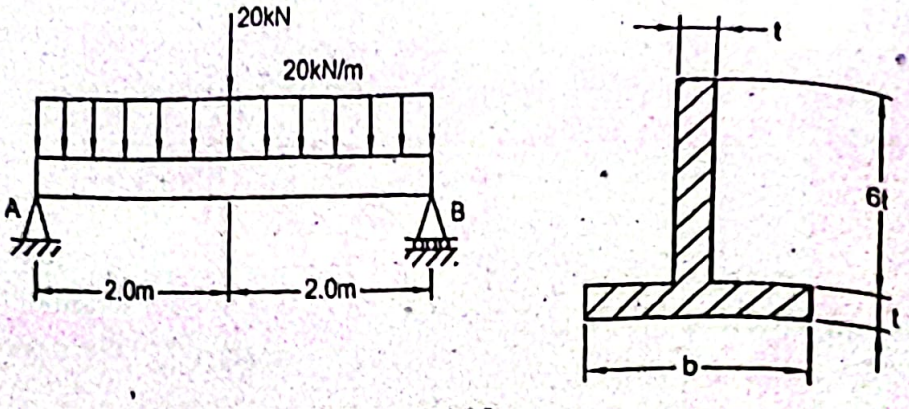

Figure P4.35

Given Data:

Length of beam, $L = 4m$

Distributed load, $w = 20kN/m$

Concentrated load, $P = 20kN$

Allowable stress in tension, $\sigma_{t_a} = 35MPa$

Allowable stress in compression, $\sigma_{c_a} = 120MPa$

To Find:

- Thickness, t
- Flange width, b

Solution:

Free body diagram of the entire beam is as follows.

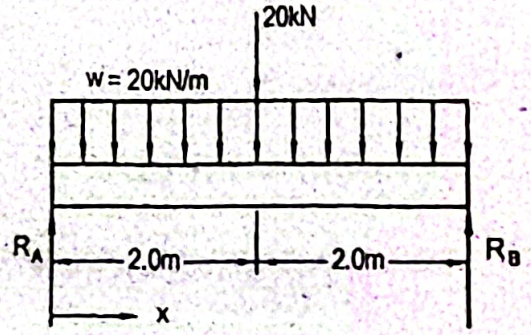

In static equilibrium condition,

$$+\uparrow \sum F_y = 0$$

$$\text{or, } R_A + R_B - 20 - w \times 4 = 0$$

$$\text{or, } R_A + R_B = 20 + 20 \times 4 = 100$$

For the symmetric loading,

$$R_A = R_B = 50\,kN$$

Shear force,

For $0 < x < 2.0m$ $\quad V_x = R_A - wx = (50 - 20x)\,kN$

At $x = 2m$, $\quad V_{x=2} = (50 - 20 \times 2)\,kN = 10kN$

Shear force,

For $2.0m < x < 4.0m$ $\quad V_x = R_A - wx - 20 = 50 - 20x - 20 = (30 - 20x)\,kN$

At $x = 2m$, $V_{x=2} = (30 - 20 \times 2)kN = -10kN$

Shear force and bending moment diagrams are given below.

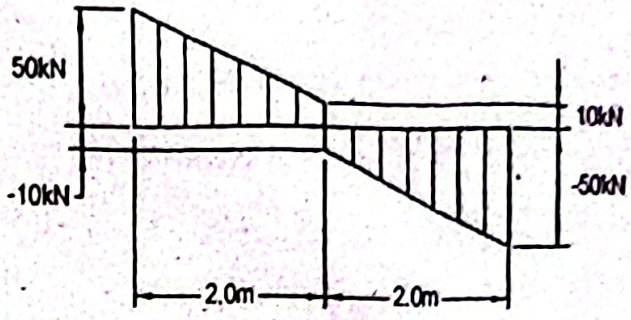

Shear force diagram

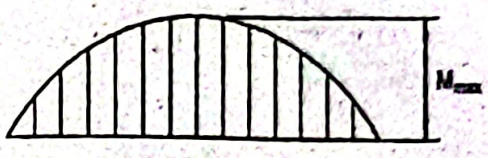

Bending moment diagram

At the point of zero shear, bending moment is maximum.

We have, $\Delta M = (area)_V$

Therefore, $M_{max} = \frac{50+10}{2} \times 2kNm = 60kNm$

To find the location of the neutral axis a section of the beam is taken as follows.

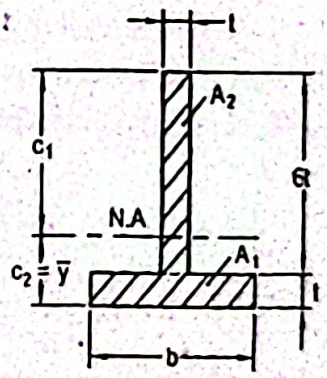

For the positive bending moment, compression occurs at the top fiber while tension occurs at the bottom fiber and the limiting stresses reach simultaneously at the extreme fibers, therefore, we can write,

$$\frac{\sigma_{c_a}}{\sigma_{t_a}} = \frac{c_1}{c_2}$$

or, $\frac{120}{35} = \frac{c_1}{c_2}$

or, $c_1 = 3.429c_2$

We have, $c_1 + c_2 = (6t + t) = 7t$

Therefore, $3.429c_2 + c_2 = 7t$

or, $c_2 = 1.58t\,mm$

and, $c_1 = (7t - 1.58t) = 5.42t$

Writing $b = xt$ we find, $\bar{y} = \frac{\sum A_i y_i}{\sum A_i}$

$$\text{or, } 1.58t \times (xt \times t + 6t \times t) = 0.5t \times (xt \times t) + 4t \times (6t \times t)$$

$$\text{or, } 1.58x + 9.48 = 0.5x + 24$$

$$\text{or, } x = 13.44.$$

Therefore, $b = 13.44t$

Now to find the moment of inertia about the neutral axis,

$$I = \frac{1}{12} \times 13.44t \times (t)^3 + (13.44t \times t)(1.58t - 0.5t)^2 + \left[\frac{1}{12} \times t \times (6t)^3 + (6t \times t)(4t - 1.58t)^2\right]$$

$$= 69.93t^4 \ mm^4$$

Now using the flexure formula we find,

$$\sigma_t = \frac{M_{max} c_1}{I}$$

$$\text{or, } \sigma_{t_a} = 120 = \frac{60 \times 10^6 \times 5.42t}{69.93t^4}$$

$$\text{or, } t = 33.84mm \ \textit{Answer}$$

Therefore, $b = 13.44 \times 33.84mm = 454.81mm$ *Answer*

Problem P4.36:

A *3m* long cast iron beam of *T*-section is subjected to couples of *M kNm* at its ends as shown in Figure P4.36. Allowable stress in tension is *35MPa* and that in compression *130MPa*. Determine the flange width *b* and the couple *M* so that the limiting stresses in tension and compression reach at the extreme fibers simultaneously.

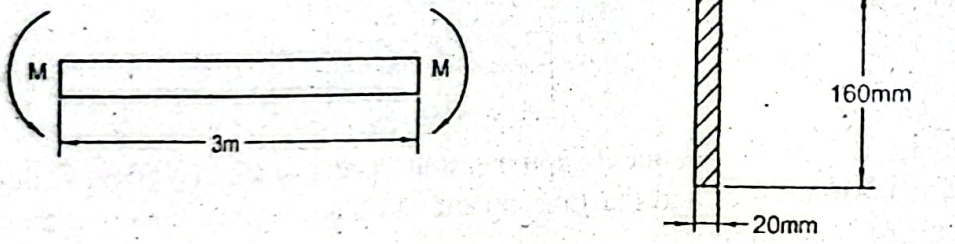

Figure P4.36

Given Data:

Length of beam, $L = 3m$

Allowable stress in tension, $\sigma_{t_a} = 35MPa$

Allowable stress in compression, $\sigma_{c_a} = 130MPa$

To Find:

- Couple, *M*
- Flange width, *b*

Solution:

To find the location of the neutral axis a section of the beam is taken as follows.

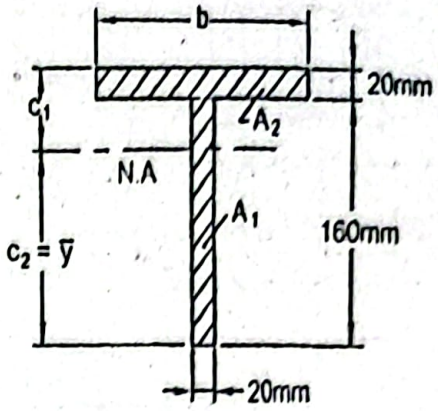

For the applied couple, there will be tension at the top fiber and compression at the bottom fiber, therefore, when the limiting stresses reach to the extreme fibers simultaneously, we find a relation,

$$\frac{\sigma_{t_a}}{\sigma_{c_a}} = \frac{c_1}{c_2} = \frac{35}{130}$$

or, $c_2 = 3.714 c_1$

We have, $c_1 + c_2 = 160 + 20 = 180$

Therefore, $c_1 + 3.714 c_1 = 180$

or, $c_1 = 38.18\,mm$

and, $c_2 = (180 - 38.18)\,mm = 141.82\,mm$

Now to find the location of the neutral axis,

$$\bar{y}A = \sum yA = \bar{y}_1 A_1 + \bar{y}_2 A_2$$

or, $141.82(160 \times 20 + b \times 20) = 80 \times (160 \times 20) + 170 \times (b \times 20)$

or, $b = 351mm$

Moment of inertia about the neutral axis,

$$I = \frac{1}{12} \times 20 \times (160)^3 + (160 \times 20)(141.82 - 80)^2 + \left[\frac{1}{12} \times 351 \times (20)^3 + (351 \times 20)(170 - 141.82)^2 \right]$$

$$= 24.87 \times 10^6\ mm^4$$

Now using the flexure formula we find,

$$\sigma_t = \frac{M_{max} c_1}{I}$$

or, $\sigma_{t_a} = 35 = \frac{M \times 38.18}{24.87 \times 10^6}$

or, $M = 22.8kNm$ **Answer**

Problem P4.37:

A cantilever gray cast iron beam carries a uniformly distributed load of $20kN/m$ over its entire length and a concentrated load of $20kN$ at its end as shown in Figure P4.37. The section of the beam is shown in the figure. Determine the thickness t if the allowable stress in tension $\sigma_{t_a} \le 35MPa$ and that in compression $\sigma_{c_a} \le 150MPa$.

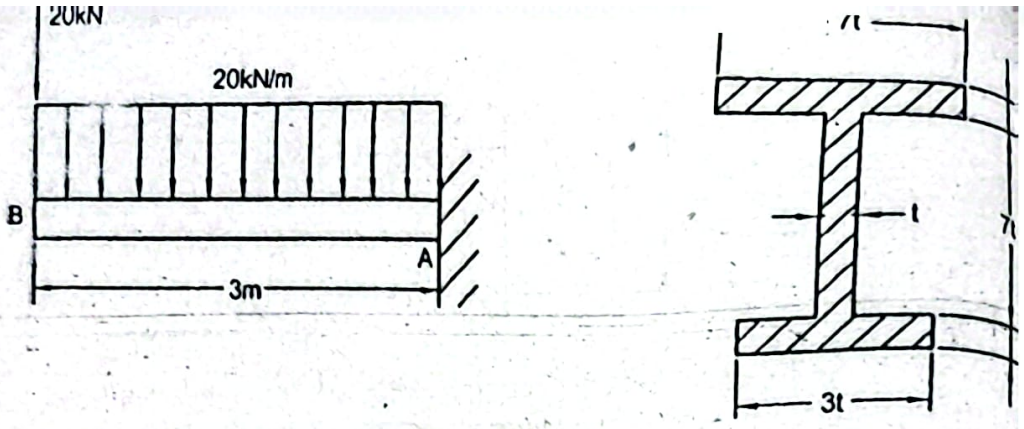

Figure P4.37

Given Data:

Length of beam, $L = 3m$

Distributed load, $w = 20kN/m$

Concentrated load, $P = 20kN$

Allowable stress in tension, $\sigma_{t_a} \leq 35MPa$

Allowable stress in compression, $\sigma_{c_a} \leq 150MPa$

To Find:

- Thickness, t

Solution:

Free body diagram of the entire beam is given below.

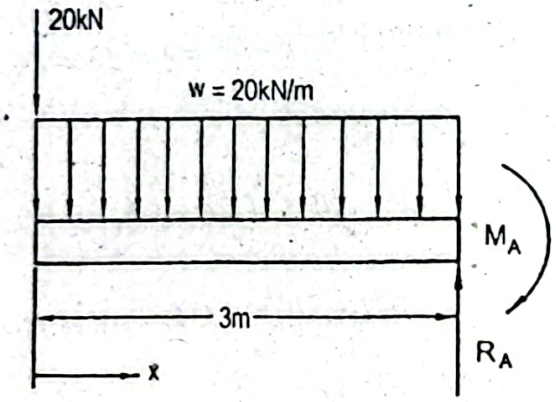

Shear force,

For $0 < x < 3.0m$ $V_x = -20 - wx = -(20 + 20x)kN$

At $x = 3m$, $V_{x=3} = -(20 + 20 \times 3)kN = -80kN$

Shear force and bending moment diagrams are as follows.

Maximum bending moment occurs at the supporting end.

We have, $\Delta M = (area)_V$

Therefore, $M_{max} = -\dfrac{20 + 80}{2} \times 3 = -150kNm$

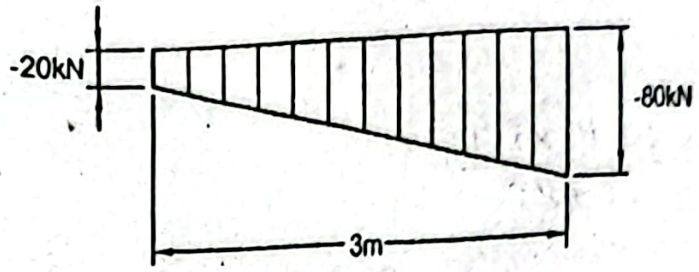

Shear force diagram

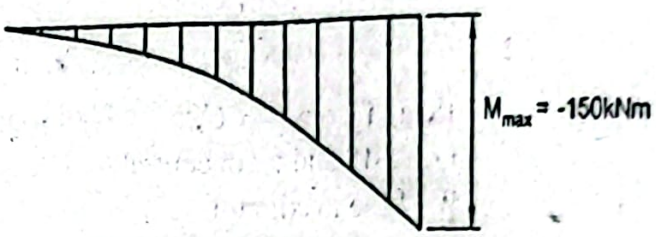

Bending moment diagram

To find the location of the neutral axis a section of the beam is taken as follows.

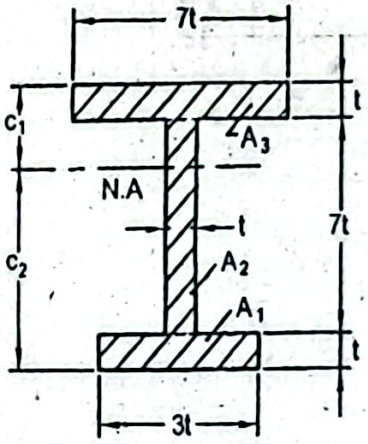

We have, $\bar{y}A = \sum yA = \bar{y}_1 A_1 + \bar{y}_2 A_2 + \bar{y}_3 A_3$

or, $\bar{y}(3t \times t + 7t \times t + 7t \times t) = 0.5t \times (3t \times t) + 4.5t \times (7t \times t) + 8.5t \times (7t \times t)$

or, $\bar{y} = 5.44t\ mm$

That is, $c_2 = \bar{y} = 5.441t\ mm$

and $c_1 = (9t - 5.441t) = 3.559t\ mm$

Now to find moment of inertia about the neutral axis,

$$I = \frac{1}{12} \times 3t \times (t)^3 + (3t \times t)(5.44t - 0.5t)^2 + \frac{1}{12} \times t \times (7t)^3$$

$$+ (7t \times t) \times (5.441t - 4.5t)^2 + \left[\frac{1}{12} \times 7t \times (t)^3 + (7t \times t)(8.5t - 5.44t)^2 \right]$$

$$= 174.36t^4\ mm^4$$

For the negative bending moment the top fiber is in tension and the bottom fiber is in compression, therefore, using the flexure formula,

$$\sigma_t = \frac{M_{max} c_1}{I}$$

or, $\sigma_{t_a} = 35 = \frac{150 \times 10^6 \times 3.559t}{174.36t^4}$

or, $t = \ldots$

and $\sigma_{c_a} = \dfrac{M_{max} c_2}{I}$

or, $150 = \dfrac{150 \times 10^6 \times 5.441t}{174.36t^4}$

or, $t = 31.48mm$

Therefore, the required thickness,

$t = 44.39mm$ *Answer*

Problem P4.38:

A simply supported beam fabricated from two $C200 \times 21$ channels welded back to carries a total distributed load of $2W$ and a concentrated load of W as shown in P4.38. Find the safe value of W if the maximum flexure stress is not to exceed 130 Neglect the self weight of the beam.

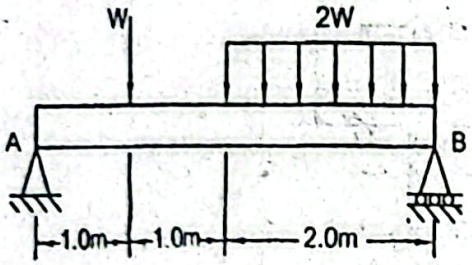

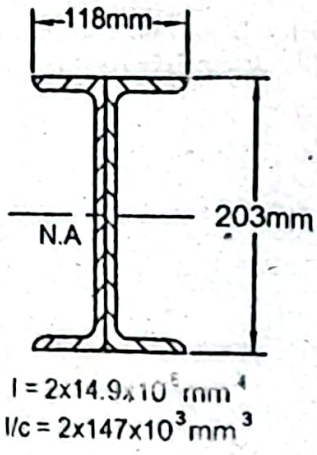

Figure P4.38

Given Data:

Length of beam, $L = 4m$

Total distributed load = $2W$

Concentrated load = W

Allowable flexure stress, $\sigma_a = 130MPa$

To Find:

- Safe load, W

Solution:

Free body diagram of the entire beam is given below.

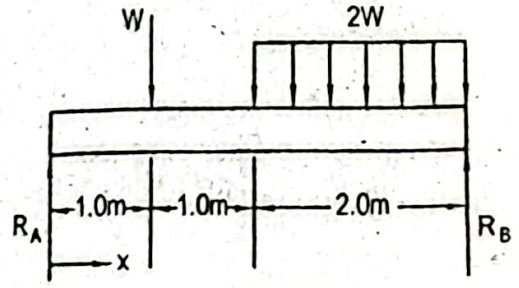

In static equilibrium condition,

$$+\uparrow \sum F_y = 0$$

$$\text{or, } R_A + R_B - W - 2W = 0$$

$$\text{or, } R_A + R_B = 3W$$

$$+\circlearrowleft \sum M_A = 0$$

$$\text{or, } R_B \times 4 - 2W \times 3 - W \times 1 = 0$$

$$\text{or, } R_B = 1.75W\ kN$$

$$\text{or, } R_B = 32.778\ kN$$

Therefore, $R_A = 3W - R_B = 3W - 1.75W = 1.25W$

Shear force,

For $0 < x < 1.0m$ $\quad V_x = R_A = 1.25W\ kN$

For $1.0m < x < 2.0m$ $\quad V_x = R_A - W = 1.25W - 1.0W = 0.25W kN$

For $2.0m < x < 4.0m$ $\quad V_x = R_A - W - \frac{2W}{2}(x-2) = 1.25W - W - Wx + 2W$

$$= (2.25W - Wx)kN$$

To locate the point of zero shear,

$$V_x = 0 = 2.25W - Wx$$

$$\text{or, } x = 2.25m$$

Shear force and bending moment diagrams are given as follows.

Bending moment is maximum at the point of zero shear.

We have, $\Delta M = (area)_V$

Therefore, $M_{max} = 1.25W \times 1.0 + 0.25W \times 1.0 + \frac{1}{2} \times 0.25W \times 0.25$

$$= 1.532W\ kNm$$

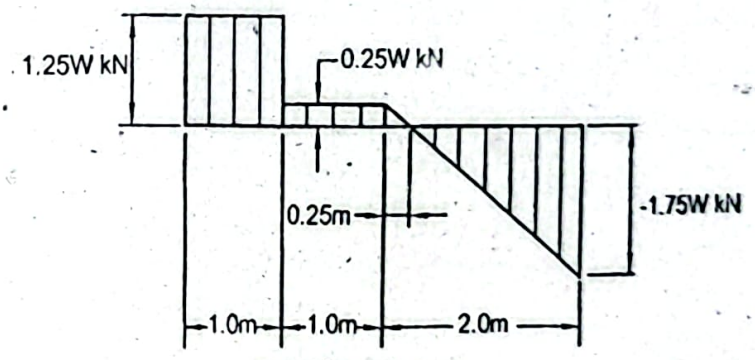

Shear force diagram

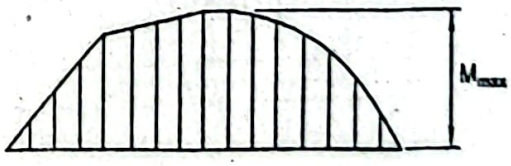

Bending moment diagram

For the positive bending moment compression occurs at the top fiber and tension occurs at the bottom fiber. But the flexure stress either in tension or compression is same. Using the flexure formula,

$$\sigma = \frac{M_{max} c}{I}$$

$$\text{or, } \sigma_a = \frac{M_{max}}{I/c}$$

$$\text{or, } 130 = \frac{1.532W \times 10^6}{2 \times 147 \times 10^3}$$

$$\text{or, } W = 24.95kN \text{ Answer}$$

Problem P4.39:

An overhang cast iron beam of *T*-section carries a total uniformly distributed load and a concentrated load of *W* as shown in Figure P4.39. If the allowable stres tension and compression are respectively *30MPa* and *100MPa*, determine the safe of *W*.

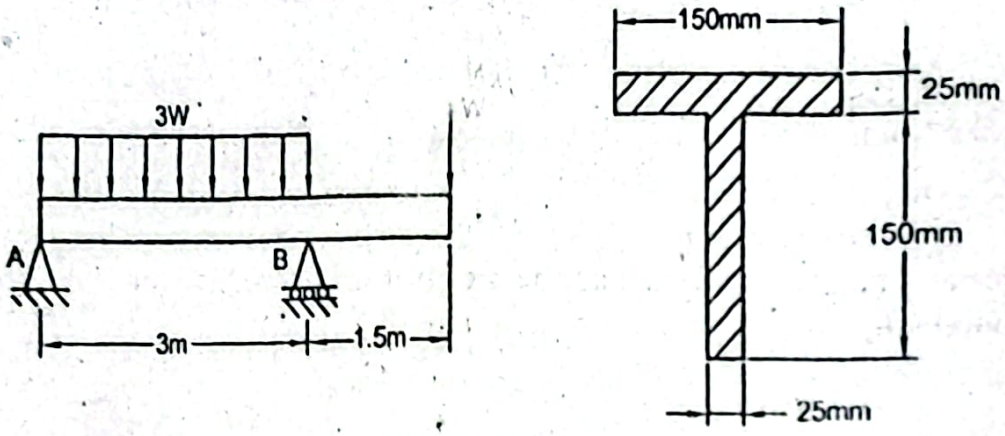

Figure P4.39

Given Data:

Length of beam, $L = 4.5m$

Total distributed load = $3W$

Concentrated load = W

Allowable stress in tension, $\sigma_{t_a} = 30MPa$

Allowable stress in compression, $\sigma_{c_a} = 100MPa$

To Find:

- Safe value of load, W

Solution:

Free body diagram of the entire beam is given below.

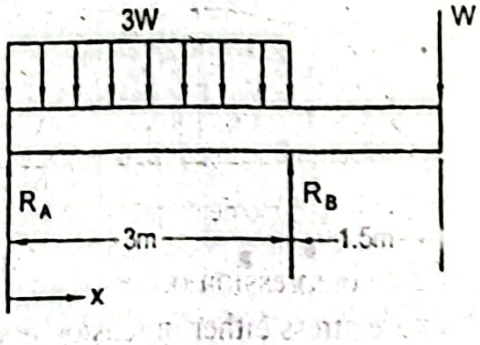

In static equilibrium condition,

$$+\uparrow \sum F_y = 0$$

or, $R_A + R_B = 3W + W = 4W$

$$+\circlearrowleft \sum M_A = 0$$

or, $R_B \times 3 - W \times 4.5 - 3W \times 1.5 = 0$

or, $R_B = 3W\ kN$

herefore, $R_A = 4W - R_B = 4W - 3W = W\ kN$

hear force,

or $0 < x < 3.0m$ $V_x = R_A - \frac{3W}{3} \times x$

$= (W - Wx)\ kN$

To locate the point of zero shear,

$V_x = 0 = W - Wx = 0$

or, $x = 1m$

At $x = 3m$, $V_{x=3} = W - 3W = -2W\ kN$

Shear force and bending moment diagrams are as follows.

Bending moment is maximum at the point of zero shear.

We have, $\Delta M = (area)$

Therefore, $M_C = \frac{1}{2} W \times 1.0 = 0.5W\ kNm$

and, $M_B = -W \times 1.5 = -1.5W\ kNm$

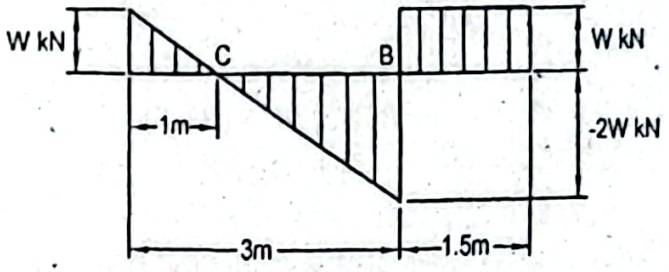

Shear force diagram

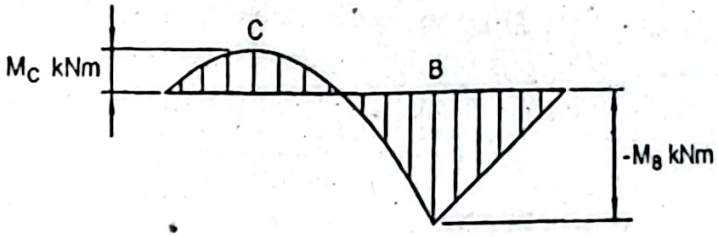

Bending moment diagram

To find the location of the neutral axis a section of the beam is taken as follows.

We have, $\bar{y}A = \sum yA = \bar{y}_1 A_1 + \bar{y}_2 A_2$

or, $\bar{y}(150 \times 25 + 150 \times 25) = 75 \times (150 \times 25) + 162.5 \times (150 \times 25)$

or, $\bar{y} = 118.75mm = c_2$

Therefore, $c_1 = (175 - 118.75)mm = 56.25mm$

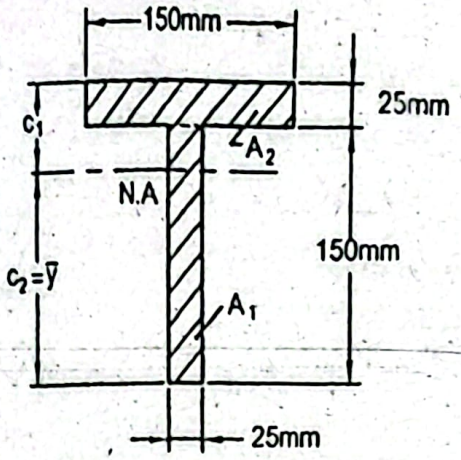

Moment of inertia about the neutral axis,

$$I=\frac{1}{12}\times 25\times(150)^3+(150\times 25)(118.75-75)^2$$
$$+\left[\frac{1}{12}\times 150\times(25)^3+(150\times 25)(162.5-118.75)^2\right]$$
$$=21.58\times 10^6\ mm^4$$

For the negative moment at the section B, the top fiber is in tension and the bottom f is in compression, therefore, using the flexure formula,

$$\sigma_t=\frac{M_B c_1}{I}$$

$$\text{or, } \sigma_{t_a}=30=\frac{1.5W\times 10^6\times 56.25}{21.58\times 10^6}$$

$$\text{or, } W=7.67kN$$

$$\text{and, } \sigma_c=\frac{M_B c_2}{I}$$

$$\text{or, } \sigma_{c_a}=100=\frac{1.5W\times 10^6\times 118.75}{21.58\times 10^6}$$

$$\text{or, } W=12.12\,kN$$

For the positive bending moment at the section C, the top fiber is in compression and t bottom fiber is in tension, therefore, using the flexure formula,

$$\sigma_c=\frac{M_C c_1}{I}$$

$$\text{or, } \sigma_{c_a}=100=\frac{0.5W\times 10^6\times 56.25}{21.58\times 10^6}$$

$$\text{or, } W=76.73kN$$

$$\text{and, } \sigma_t=\frac{M_C c_2}{I}$$

$$\text{or, } \sigma_{t_a}=30=\frac{0.5W\times 10^6\times 118.75}{21.58\times 10^6}$$

$$\text{or, } W=10.90kN$$

Hence, the required safe value,

$$W=7.67kN \quad \textit{Answer}$$

EXERCISES

Problem E4.1:
Derive an expression of maximum shearing stress for a beam of solid circular cross-section, A subjected to a vertical shear of V.

Ans.: $\frac{4V}{3A}$

Problem E4.2:
Derive an expression of maximum shearing stress for a beam of hollow circular cross-section, A subjected to a vertical shear of V.

Ans.: $\frac{2V}{A}$

Problem E4.3:
A simply supported beam of $120mm$ diameter carries a distributed load of $15kN/m$ over its entire length. Determine the maximum length of the beam so that the maximum flexure stress is not to exceed $100MPa$.

Ans.: $3m$

Problem E4.4:
A $4m$ long cantilever beam of $100mm \times 200mm$ carries a triangular distribution of load from the free end with maximum value of $w_o\ kN/m$ at the supporting end as shown in Figure E4.4. If the maximum flexure stress is not to exceed $100MPa$, determine w_o.

Ans.: $w_o = 24.97kN/m$

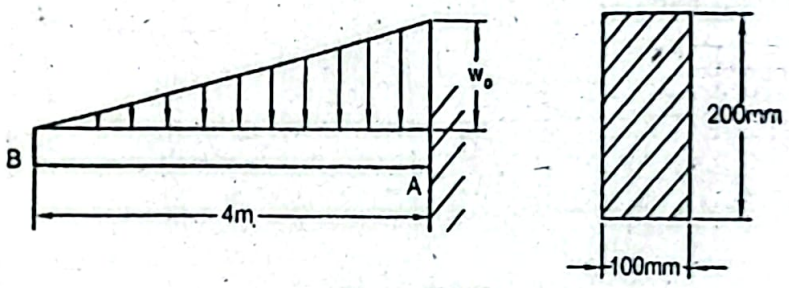

Figure E4.4

Problem E4.5:
An overhanging beam $75mm \times 150mm$ carries a uniformly distributed load of $10kN/m$ at the mid span and two concentrated loads each of $20kN$ at its ends as shown in Figure E4.5. Determine the (a) maximum normal stress, (b) maximum shearing stress and (c) shearing stress at a point in between the top fiber and the neutral axis.

Ans.: $(a)\sigma_{max} = 71.11MPa; (b)\tau_{max} = 2.67MPa; (c)\tau = 2MPa$

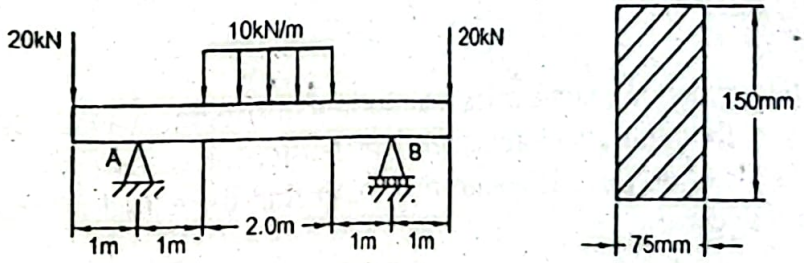

Figure E4.5

Problem E4.6:

An overhanging beam of $50mm \times 100mm$ supports a uniformly distributed $5kN/m$ from its free end up to the nearest support and a concentrated load between the top supports as shown in figure E4.6. Find the load P so that m flexure stress at C is three times to that at B.

Ans.: $P =$

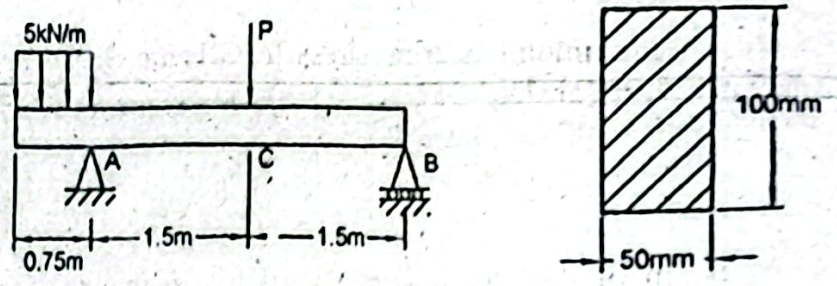

Figure E4.6

Problem E4.7:

An overhanging beam is fabricated by welding two channels $C250 \times 45$ back to shown in Figure E4.7. The beam supports a uniformly distributed load of w including its self weight over its entire length and a concentrated load of $15kN$ maximum flexure stress either in tension of compression is not to exceed 10 determine the maximum value of w.

Ans.: $w = 89.84$

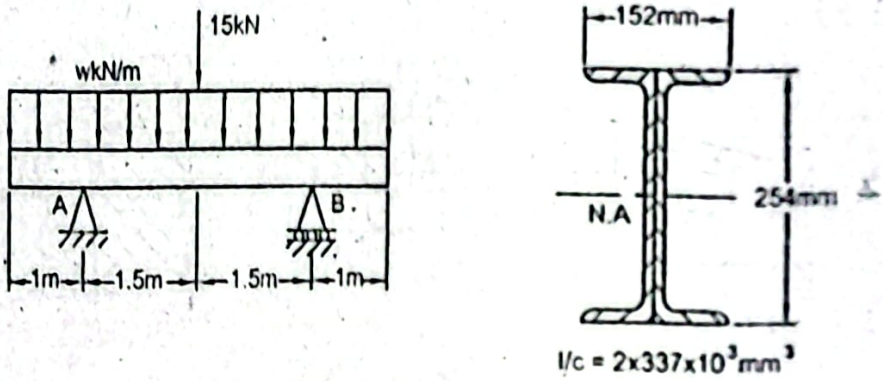

Figure E4.7

Problem E4.8:

A $6m$ long simply supported beam carries a concentrated load of $40kN$ at its mid Select the lightest W shape beam if the maximum flexure stress is n exceed $125MPa$. Also determine the actual maximum flexure stress for the selected.

Ans.: $W310 \times 39$; $\sigma_{max} = 112.4$

Problem E4.9:

A $8m$ long simply supported beam carries a uniformly distributed load of $15kN/m$ its entire length. If the allowable stress either in tension or compression is 140 select the lightest S-section for this application. Also find the actual maximum fle stress for the beam selected.

Ans.: $S380 \times 64$; $\sigma_{max} = 128$

Problem E4.10:

A $3m$ long cantilever cast iron beam of T-section is subjected to a couple of $20kNm$ and a concentrated load of $10kN$ as shown in Figure E4.10. Find the thickness t and the flange width b so that limiting stresses reach at the extreme fibers simultaneously. Also determine the maximum shearing stress. Consider allowable stress in tension $\sigma_{t_a} = 35MPa$ and that in compression $\sigma_{c_a} = 125MPa$.

Ans.: $t = 29.09mm;\ b = 418.02mm;\ \tau_{max} = 2.49MPa$

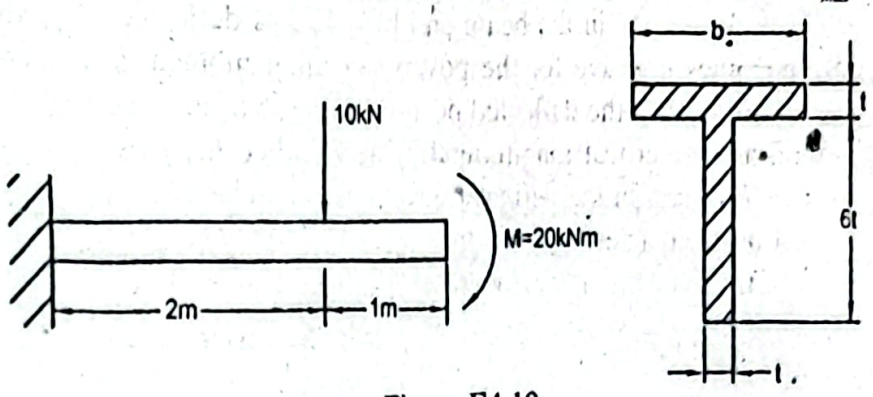

Figure E4.10

Problem E4.11:

A cantilever beam of wide flange section supports two concentrated loads as shown in Figure E4.11. If the normal stress is not to exceed $120MPa$, determine load P. Determine also the maximum shearing stress for this loading.

Ans.: $P = 10.09kN;\ \tau_{max} = 9.05MPa$

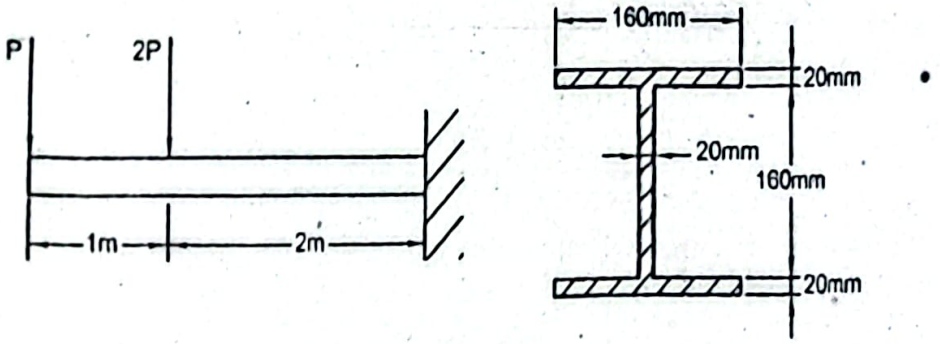

Figure E4.11

Chapter V

Beam Deflection

Question 5.1: Derive an expression of elastic curve of a Beam.

Answer:

The shape of a beam axis changes when the load is applied. Due to the application of bending moment is developed in the beam and the beam is deflected. The shape of deflected beam becomes concave for the positive bending moment and convex for negative bending moment. In the deflected position, the line of intersection of the neu surface of a beam and a vertical longitudinal plane is called the *elastic curve of be* Therefore, the axis of beam in the deflected position is the elastic curve. In Figure 5 an elastic curve of beam in an enlarged form has been shown. This elastic curve as sh in Figure 5.1a is of the concave shape due to the positive bending moment.

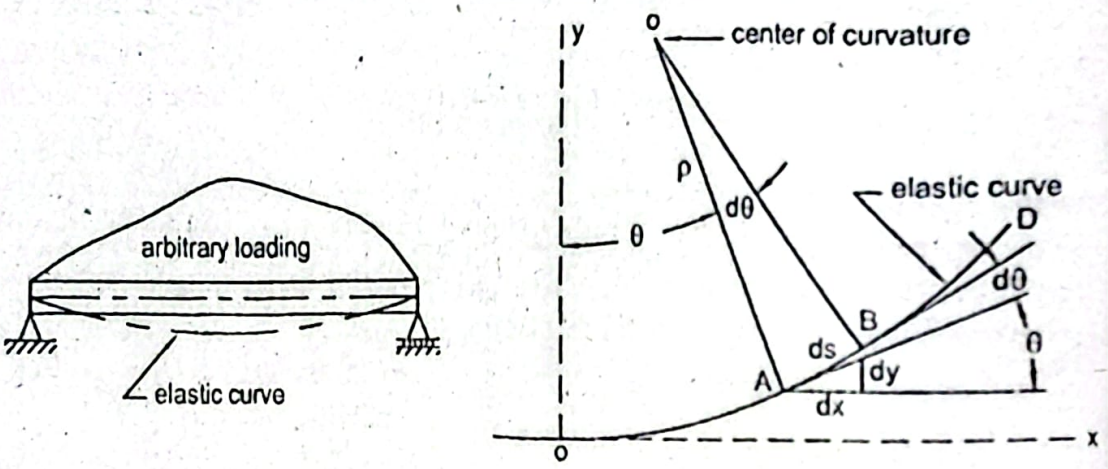

(a) (b)

Figure 5.1: Elastic Curve of a Beam.

The differential arc distance *ds* along the elastic curve as shown in Figure 5.1b can obtained as,

$$ds = \rho d\theta \tag{5.}$$

where,

ρ = Radius of curvature of elastic curve over the arc length ds

$d\theta$ = Change of angle between C and D

Following Figure 5.1b the differential arc distance ds can also be expressed as,

$$ds = \sqrt{dx^2 + dy^2}$$

$$\text{or, } \frac{ds}{dx} = \sqrt{1 + \left(\frac{dy}{dx}\right)^2} \tag{5.2}$$

where,

dx = Elemental distance along x-direction between C and D

dy = Elemental distance along y-direction between C and D

The angle θ can be related as,

$$\frac{dy}{dx} = \tan\theta$$

Differentiating, one finds,

$$\frac{d^2y}{dx^2} = \frac{d\theta}{dx}\sec^2\theta$$

$$\text{or, } \frac{d\theta}{dx} = \frac{d^2y}{dx^2}\cos^2\theta \qquad (5.3)$$

Again from Figure 5.1b, one can obtain,

$$ds\cos\theta = dx$$

$$\text{or, } \frac{dx}{ds} = \cos\theta$$

$$\text{or, } \cos^2\theta = \left(\frac{dx}{ds}\right)^2$$

$$\text{or, } \cos^2\theta = \frac{1}{1+\left(\frac{dy}{dx}\right)^2} \qquad (5.4)$$

From Equations (5.1), (5.2), (5.3) and (5.4), the *relation of the elastic curve* of a beam can be obtained as,

$$\frac{1}{\rho} = \frac{\frac{d^2y}{dx^2}}{\left[1+\left(\frac{dy}{dx}\right)^2\right]^{3/2}} \qquad (5.5)$$

Another form of the relation of the elastic curve may be obtained as follows,

$$\frac{1}{\rho} = \frac{d\theta}{ds} = \frac{d\theta}{dx}\cdot\frac{dx}{ds}$$

$$= \frac{d\theta}{dx}\cos\theta$$

$$= \frac{d^2y}{dx^2}\cos^2\theta \quad \text{Substituting from Equation (5.3)}$$

Question 5.2: Write necessary assumptions for derivation of deflection equation of a beam.

Answer:

The assumptions which are made in deriving the expression of deflection are given below:

a) The stresses developed due to the bending do not exceed the proportional limi follows Hooke's law. The deflections are small compared to the span length.

b) The plane section across the beam remains plane after bending.

c) The length of the elastic curve remains same as the length of its horizo projection.

d) The deflection due to shear is negligible. In reality the deflection due to shea very small compared to that due to bending. Deflection will be obtained h based on bending moment only. Deflection due to shear may be calcula separately.

Question 5.3: Find an expression of deflection of a beam by using double integrati method.

Answer:

The relation of the elastic curve obtained from the flexure formula (Equation 4.10) is,

$$\frac{1}{\rho} = \frac{M}{EI} \tag{5}$$

Now from Equations (5.5) and (5.6), the following expression is obtained,

$$\frac{\frac{d^2y}{dx^2}}{\left[1+\left(\frac{dy}{dx}\right)^2\right]^{3/2}} = \frac{M}{EI} \tag{5.}$$

Since $\frac{dy}{dx}$ is small, its square is negligible compared to unity and hence one finds,

$$\frac{d^2y}{dx^2} = \frac{M}{EI}$$

$$\text{or, } EI\frac{d^2y}{dx^2} = M \tag{5.8}$$

This is known as the *differential equation of elastic curve of a deflected beam.* Th product EI is called the *flexural rigidity* of the beam and is usually constant along th beam. Now integrating Equation (5.8), one obtains,

$$EI\frac{dy}{dx} = \int M dx + c_1 \tag{5.9}$$

In Equation (5.9) dy/dx is the slope of the elastic curve at any point, as such it is calle the *slope equation.* Again integrating equation (5.9),

$$EIy = \iint (M dx)dx + c_1 x + c_2 \tag{5.10}$$

Equation (5.10) is the required *deflection equation* of the elastic curve specifying the value of y at any value of x. Since the deflection is obtained by double integration, this is known as the *double integration method.*

Question 5.4: *Derive an expression of deflection of a beam by using area moment method. Also write the basic theorems which have been established for area moment method.*

Answer:

In Figure 5.2a, the elastic curve of a beam with highly exaggerated deflection is shown while the moment diagram is shown in Figure 5.2b. From Equation (5.8), we find,

$$\frac{d^2y}{dx^2} = \frac{M}{EI}$$

Now introducing slope $\frac{dy}{dx} = \theta$, Equation (5.8) can be written as,

$$\frac{d\theta}{dx} = \frac{M}{EI}$$

$$\text{or, } d\theta = \frac{M}{EI}dx \tag{5.11}$$

From Figure 5.2a it can be noticed that the tangent drawn to the elastic curve at the points C and D are separated by the same angle $d\theta$ by which the section OC and OD rotate relative to each other. Therefore, by integrating Equation (5.11) the change in slope between the tangents drawn to the elastic curve at any two points A and B can be obtained

$$\theta_{AB} = \int_{\theta_A}^{\theta_B} d\theta = \frac{1}{EI}\int_{x_A}^{x_B} M dx \tag{5.12}$$

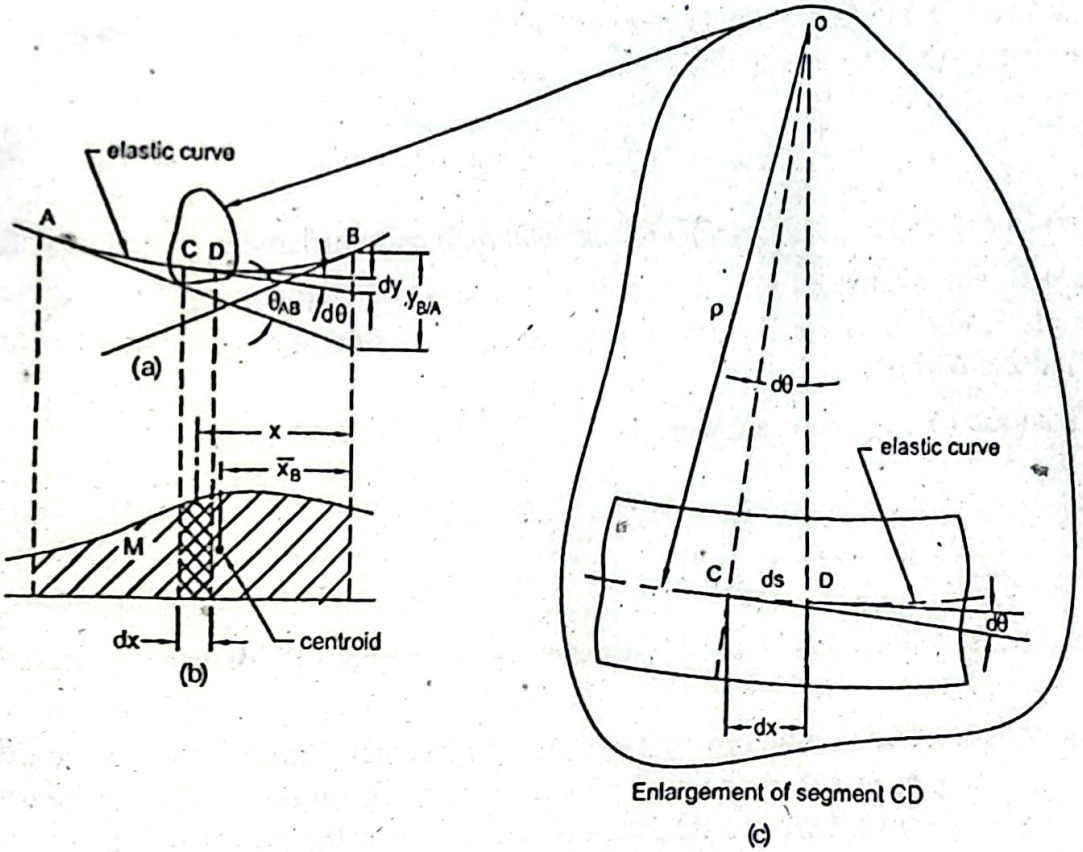

Figure 5.2: Deflection of a Beam.

The perpendicular distance from the point B between the tangents at the points C and dy and it can be written as,

$$dy = xd\theta \qquad (5$$

Therefore, by integrating Equation (5.13) the vertical distance between the point B the tangent drawn to the point A can be obtained as,

$$y_{B/A} = \int dy = \int xd\theta \qquad (5$$

Now substituting the value of $d\theta$ from Equation (5.11) in Equation (5.14), one finds,

$$y_{B/A} = \frac{1}{EI}\int_{x_A}^{x_B} x(Mdx) \qquad (5$$

This distance is often known as the deviation of the point B from a tangent drawn at p A or as the tangential deviation of the point B with respect to the point A. Figure shows the elastic curve with tangential deviation. It can be seen from this figure tha deviation $y_{B/A}$ and $y_{A/B}$ are not same.

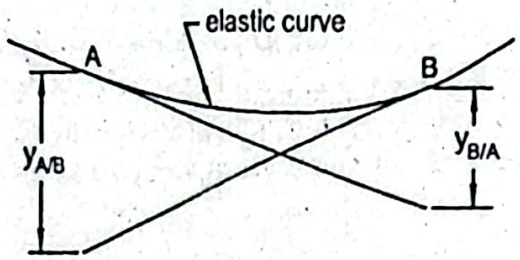

Figure 5.3: Unequal Tangential Deviation.

Equations (5.12) and (5.15) yield two important basic theorems of area moment met From Equation (5.12), one can find,

$$\theta_{AB} = \frac{1}{EI}(area)_{AB} \qquad (5$$

Equation (5.16) yields *Theorem I of area moment method*, which can be stated as follo

Theorem I: The change in slope between the tangents drawn to the elastic curve at two points A and B is equal to the product of $1/EI$ and the area of moment diag between these two points.

From Equation (5.15), one can obtain,

$$y_{B/A} = \frac{I}{EI}(area)_{BA}.\bar{x}_B \qquad (5.$$

Equation (5.17) yields *Theorem II of area moment method*, which can be stated follows:

Theorem II: The deviation of any point B relative to a tangent drawn to the elastic cu at any other point A, in a direction perpendicular to the original position of the beam equal to the product of $1/EI$ and the moment of area about the point B of that part moment diagram between the points A and B.

The product EI is called the *flexural rigidity* and the values of E and I remain constant throughout the length of the beam.

SOLVED PROBLEMS

Problem P5.1:

Using double integration method find the expressions of maximum deflection and free end slope of a cantilever beam of length L subjected to a concentrated load of P at its free end.

Given Data:

Length of beam $= L$

Concentrated load $= P$

To Find:

Expression of maximum deflection, y_{max}

Expression of free end slope, θ

Solution:

Free body diagram of the entire beam and the elastic curve of the beam in the deflected condition are shown in the figures below.

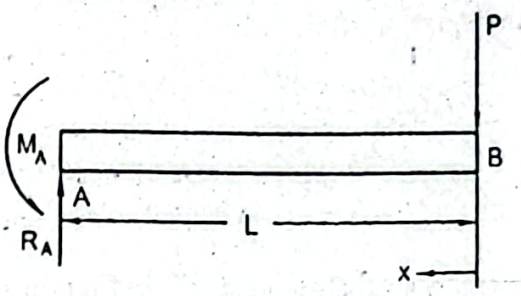

Free body diagram of entire beam

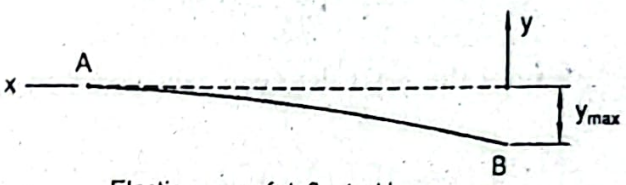

Elastic curve of deflected beam

Bending moment, $M_x = -Px$

We have an equation of elastic curve of a deflected beam,

$$EI\frac{d^2y}{dx^2} = M$$

Therefore, $$EI\frac{d^2y}{dx^2} = -Px$$

Integrating we have, $$EI\frac{dy}{dx} = -\frac{Px^2}{2} + C_1 \qquad (i)$$

Using boundary condition at $x = L$, $\frac{dy}{dx} = 0$ we find,

$$0 = -\frac{PL^2}{2} + C_1$$

$$\text{or, } C_1 = \frac{PL^2}{2}$$

Substituting this value in Equation (i),

$$EI\frac{dy}{dx} = -\frac{Px^2}{2} + \frac{PL^2}{2}$$

Again integrating, $$EIy = -\frac{Px^3}{6} + \frac{PL^2}{2}x + C_2$$

Using boundary condition at $x = L$, $y = 0$ we find,

Constant; $$C_2 = \frac{PL^3}{6} - \frac{PL^3}{2} = -\frac{PL^3}{3}$$

Substituting this value in Equation (iii),

$$EIy = -\frac{Px^3}{6} + \frac{PL^2}{2}x - \frac{PL^3}{3}$$

Maximum deflection occurs at the free end, that is, at $x = 0$, $y = y_{max}$.

Substituting these values in Equation (iv),

$$EIy_{max} = -\frac{PL^3}{3}$$

$$\text{or, } y_{max} = -\frac{PL^3}{3EI} \quad \textit{Answer}$$

Slope at the free end is obtained by substituting $x = 0$ in Equation (ii),

$$\left.\frac{dy}{dx}\right|_{x=0} = \theta = \frac{PL^2}{2EI} \quad \textit{Answer}$$

Note: The value is positive since the x-axis has been considered from the free end.

Problem P5.2:

Using double integration method, determine an expression of maximum deflectic cantilever beam subjected to a uniformly distributed load of w over its entire lengt

Given Data:

Length of beam $= L$

Uniformly distributed load $= w$

To Find:

- Expression of maximum deflection, y_{max}

Solution:

Free body diagram of the entire beam and the elastic curve of the beam in the def condition are shown in the figures below.

Bending moment, $$M_x = -\frac{wx^2}{2}$$

We have an equation of elastic curve of a deflected beam,

$$EI\frac{d^2y}{dx^2} = M$$

Therefore, $$EI\frac{d^2y}{dx^2} = -\frac{wx^2}{2}$$

Now integrating, $$EI\frac{dy}{dx} = -\frac{wx^3}{6} + C_1 \qquad (i)$$

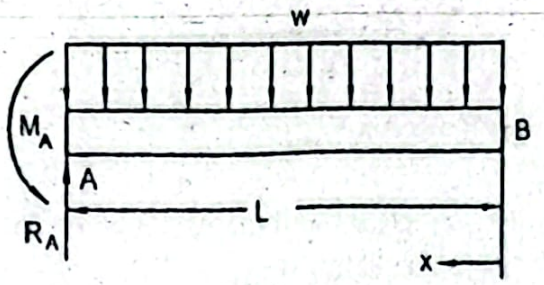

Free body diagram of entire beam

Elastic curve of deflected beam

Using boundary condition at $x = L$, $\frac{dy}{dx} = 0$ we find,

Constant, $$C_1 = \frac{wL^3}{6}$$

Substituting this value in Equation (i),

$$EI\frac{dy}{dx} = -\frac{wx^3}{6} + \frac{wL^3}{6}$$

Again integrating, $$Ely = -\frac{wx^4}{24} + \frac{wL^3}{6}x + C_2 \qquad (ii)$$

Using boundary condition at $x = L$, $y = 0$ we find,

Constant, $$C_2 = \frac{wL^4}{24} - \frac{wL^4}{6} = -\frac{wL^4}{8}$$

Substituting this value in Equation (ii),

$$Ely = -\frac{wx^4}{24} + \frac{wL^3}{6}x - \frac{wL^4}{8} \qquad (iii)$$

At $x = 0$, $y = y_{max}$, therefore, from Equation (iii),

$$Ely_{max} = -\frac{wL^4}{8}$$

or, $$y_{max} = -\frac{wL^4}{8EI}$$ *Answer*

Problem P5.3:
Using double integration method, find an expression of maximum deflection of a supported beam of length L subjected to a uniformly distributed load of w over i length.

Given Data:
Length of beam = L
Uniformly distributed load = w

To Find:
- Expression of maximum deflection, y_{max}

Solution:
Free body diagram of the entire beam and the elastic curve of the beam in the condition are shown in the figures below.

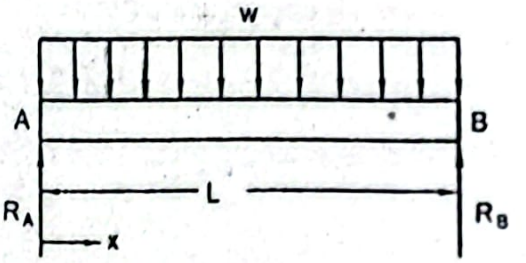

Free body diagram of entire beam

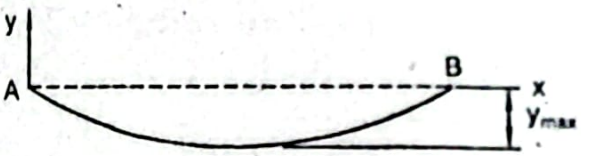

Elastic curve of deflected beam

In static equilibrium condition,

$$+\uparrow \sum F_y = 0:$$

$$\text{or, } R_A + R_B - wL = 0$$

$$\text{or, } R_A + R_B = wL$$

For symmetric loading, $R_A = R_B = \frac{wL}{2}$

Bending moment,

For $0 < x < L$ $\quad M_x = R_A x - \frac{wx^2}{2}$

$$\text{or, } M_x = \frac{wL}{2}x - \frac{wx^2}{2}$$

We have, $\quad EI\frac{d^2y}{dx^2} = M$

Therefore, $\quad EI\frac{d^2y}{dx^2} = \frac{wL}{2}x - \frac{wx^2}{2}$

ıtegrating, $$EI\frac{dy}{dx}=\frac{wLx^2}{4}-\frac{wx^3}{6}+C_1 \qquad (i)$$

or symmetric loading, at $x=\frac{L}{2}, \frac{dy}{dx}=0$ we find,

$$C_1=-\frac{wL^3}{16}+\frac{wL^3}{48}=-\frac{wL^3}{24}$$

ıbstituting this value in Equation (i),

$$EI\frac{dy}{dx}=\frac{wLx^2}{4}-\frac{wx^3}{6}-\frac{wL^3}{24}$$

gain integrating, $$Ely=\frac{wLx^3}{12}-\frac{wx^4}{24}-\frac{wL^3}{24}x+C_2 \qquad (ii)$$

ıing boundary condition at $x=0$, $y=0$ we find,

ınstant, $C_2=0$

ıbstituting this value in Equation (ii),

$$Ely=\frac{wLx^3}{12}-\frac{wx^4}{24}-\frac{wL^3}{24}x \qquad (iii)$$

ince the maximum deflection occurs at the mid point of the beam,

at is, $y=y_{max}$ at $x=\frac{L}{2}$, therefore from Equation (iii),

$$Ely_{max}=\frac{wL^4}{96}-\frac{wL^4}{384}-\frac{wL^4}{48}$$

$$\text{or, } y_{max}=-\frac{5wL^4}{384EI} \quad \textit{Answer}$$

roblem P5.4:

Using double integration method, obtain an expression of maximum deflection of a mply supported beam of length L subjected to a concentrated load of P at the center of ıe beam.

iven Data:

ength of beam $= L$

oncentrated load $= P$

o Find:

Expression of maximum deflection, y_{max}

olution:

ree body diagram of the entire beam and the elastic curve of the beam in the deflected ondition are shown in the figures below.

ı static equilibrium condition,

$$+\uparrow \sum F_y = 0$$

$$R_A + R_B = P$$

For this loading, $R_A = R_B = \frac{P}{2}$

Bending moment,

For $0 < x < L/2$ $M_x = R_A x = \frac{P}{2} x$

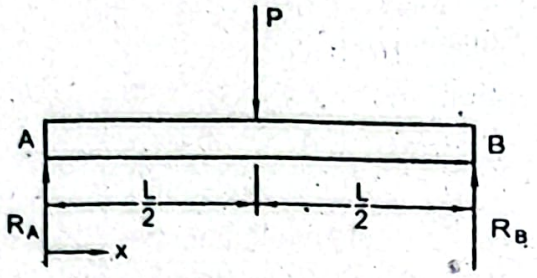

Free body diagram of entire beam

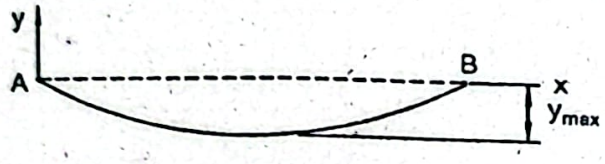

Elastic curve of deflected beam

We have an equation of elastic curve of a deflected beam,

$$EI\frac{d^2y}{dx^2} = M$$

Therefore, $$EI\frac{d^2y}{dx^2} = \frac{P}{2}x$$

Integrating we have, $$EI\frac{dy}{dx} = \frac{Px^2}{4} + C_1$$

Using boundary condition at $x = \frac{L}{2}$, $\frac{dy}{dx} = 0$ we find,

Constant, $$C_1 = -\frac{PL^2}{16}$$

Substituting this value in Equation (i),

$$EI\frac{dy}{dx} = \frac{Px^2}{4} - \frac{PL^2}{16}$$

Again integrating, $$EIy = \frac{Px^3}{12} - \frac{PL^2}{16}x + C_2$$

Using boundary condition at $x = 0$, $y = 0$ we find,

Constant, $C_2 = 0$

Substituting this value in Equation (iii),

$$EIy = \frac{Px^3}{12} - \frac{PL^2}{16}x$$

Since the maximum deflection occurs at the mid point for this loading, the substituting $x = L/2$ and $y = y_{max}$ in Equation (iv) we find,

$$EIy_{max} = \frac{PL^3}{96} - \frac{PL^3}{32} = -\frac{PL^3}{48}$$

$$\text{or, } y_{max} = -\frac{PL^3}{48EI} \quad \textit{Answer}$$

roblem P5.5:

sing double integration method, derive the expressions of maximum deflection and free d slope for a cantilever beam of length L subjected to a couple M_0 at its free end as own in Figure P5.5.

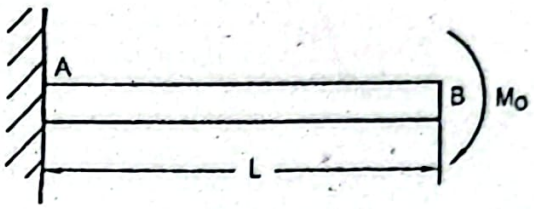

Figure P5.5

iven Data:

ength of beam $= L$

ouple $= M_0$

o Find:

Expression of maximum deflection, y_{max}

Expression of free end slope, θ

olution:

ree body diagram of the entire beam and the elastic curve of the beam in the deflected ondition are shown in the figures below.

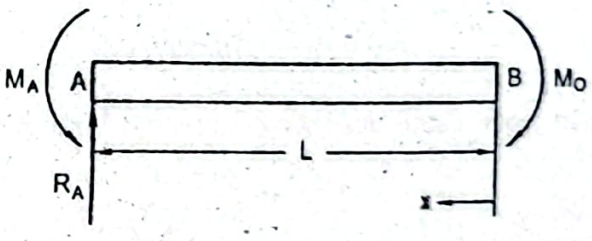

Free body diagram of entire beam

Elastic curve of deflected beam

We have an equation of elastic curve of a deflected beam,

$$EI\frac{d^2y}{dx^2} = M$$

Therefore,

$$EI\frac{d^2y}{dx^2} = -M_0$$

Integrating we have, $EI\frac{dy}{dx} = -M_0 x + C_1$

Using boundary condition at $x = L$, $\frac{dy}{dx} = 0$ in Equation (i),

Constant, $C_1 = M_0 L$

Substituting this value in Equation (i),

$$EI\frac{dy}{dx} = -M_0 x + M_0 L$$

Again integrating, $EIy = -\frac{M_0 x^2}{2} + M_0 Lx + C_2$

Using boundary condition at $x = L$, $y = 0$ we find,

Constant, $C_2 = -\frac{M_0 L^2}{2}$

Substituting this value in Equation (iii),

$$EIy = -\frac{M_0 x^2}{2} + M_0 Lx - \frac{M_0 L^2}{2}$$

Since the maximum deflection occurs at the free end, that is, at $x = 0$, therefore, fi Equation (iv) we find,

$$EIy_{max} = -\frac{M_0 L^2}{2}$$

$$\text{or, } y_{max} = -\frac{M_0 L^2}{2EI} \quad \textit{Answer}$$

Substituting $x = 0$ in Equation (ii), the free end slope becomes,

$$\left.\frac{dy}{dx}\right|_{x=0} = \theta = \frac{M_0 L}{EI} \quad \textit{Answer}$$

Note: The value is positive since x-axis has been considered from the free end.

Problem P5.6:

A cantilever beam of length L supports a concentrated load of P at the mid point shown in Figure P5.6. Using double integration method, find the equations of elas curve and an expression of maximum deflection.

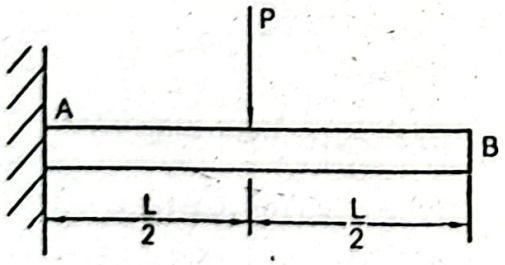

Figure P5.6

Given Data:

Length of beam = L

Concentrated load = P

To Find:

Equations of elastic curve

Expression of maximum deflection, y_{max}

Solution:

Free body diagram of the entire beam and the elastic curve of the beam in the deflected condition are shown in the figures below.

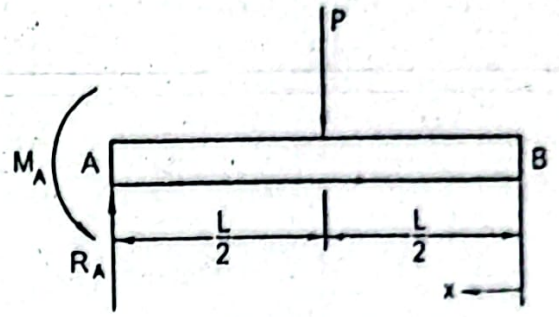

Free body diagram of entire beam

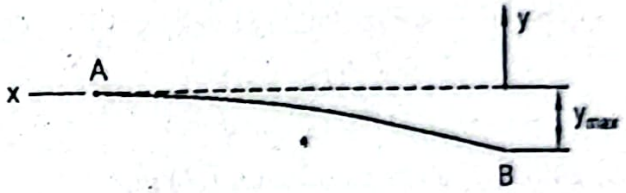

Elastic curve of deflected beam

Bending moment,

For $0 < x < L/2$ $\quad M_x = 0$

We have an equation of elastic curve of a deflected beam,

$$EI\frac{d^2y}{dx^2} = M$$

Therefore, $$EI\frac{d^2y}{dx^2} = 0$$

Integrating we have, $$EI\frac{dy}{dx} = C_1 \qquad (i)$$

Again integrating. $$EIy = C_1x + C_2 \qquad (ii)$$

Bending moment,

For $L/2 < x < L$ $\quad M_x = -P\left(x - \frac{L}{2}\right)$

Therefore, $$EI\frac{d^2y}{dx^2} = -P\left(x - \frac{L}{2}\right)$$

or, $$EI\frac{dy}{dx} = -Px + \frac{PL}{2}$$

Integrating, $$EI\frac{dy}{dx} = -\frac{Px^2}{2} + \frac{PL}{2}x + C_3 \qquad (iii)$$

Again integrating, $$EIy = -\frac{Px^3}{6} + \frac{PLx^2}{4} + C_3x + C_4 \qquad (iv)$$

Using boundary condition at $x = L$, $\frac{dy}{dx} = 0$ in Equation *(iii)*,

$$0 = -\frac{PL^2}{2} + \frac{PL^2}{2} + C_3$$

$$\text{or, } C_3 = 0$$

Using boundary condition at $x = L$, $y = 0$ in Equation *(iv)*,

$$0 = -\frac{PL^3}{6} + \frac{PL^3}{4} + C_4$$

$$\text{or, } C_4 = -\frac{PL^3}{12}$$

Substituting the values of constants C_3 and C_4 in Equation *(iv)*,

For $L/2 < x < L$ $\qquad EIy = -\frac{Px^3}{6} + \frac{PLx^2}{4} - \frac{PL^3}{12}$

Slope at $x = L/2$ will be same by Equations *(i)* and *(iii)*, therefore,

$$C_1 = -\frac{PL^2}{8} + \frac{PL^2}{4} = \frac{PL^2}{8}$$

Deflection at $x = L/2$ will be same by Equations *(ii)* and *(v)*,

$$\frac{PL^2}{8}\frac{L}{2} + C_2 = -\frac{PL^3}{48} + \frac{PL^3}{16} - \frac{PL^3}{12} \quad \text{(Substituting value o}$$

$$\text{or, } C_2 = -\frac{5PL^3}{48}$$

Substituting the values of constants C_1 and C_2 in Equation *(ii)*,

For $0 < x < L/2$ $\qquad EIy = \frac{PL^2}{8}x - \frac{5PL^3}{48}$

Therefore, the required equations of elastic curve,

For $0 < x < L/2$ $\qquad EIy = \frac{PL^2}{8}x - \frac{5PL^3}{48}$ *Answer*

For $L/2 < x < L$ and $EIy = -\frac{Px^3}{6} + \frac{PLx^2}{4} - \frac{PL^3}{12}$ *Answer*

Maximum deflection occurs at the free end, therefore, substituting $x = 0$ in Equ *(vi)*, the expression of the maximum deflection becomes,

$$y_{max} = -\frac{5PL^3}{48EI} \text{ Answer}$$

Problem P5.7:

A cantilever beam of length L is subjected to a couple M_o as shown in Figure P

Using double integration method, determine the equations of elastic curve of the b and an expression of maximum deflection.

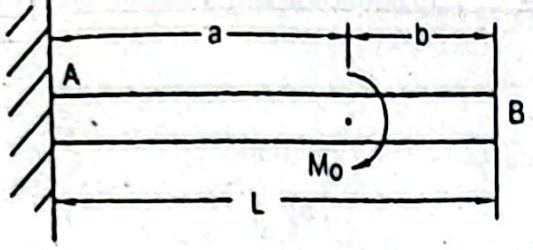

Figure P5.7

en Data:

igth of beam $= L$

iple $= M_0$

Find:

quations of elastic curve

xpression of maximum deflection, y_{max}

lution:

e body diagram of the entire beam and the elastic curve of the beam in the deflected ndition are shown in the figures below.

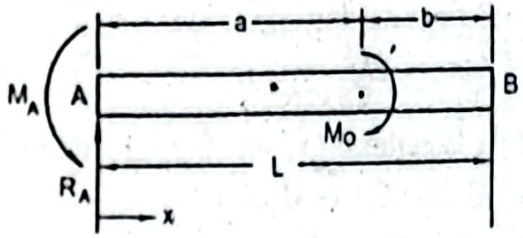

Free body diagram of entire beam

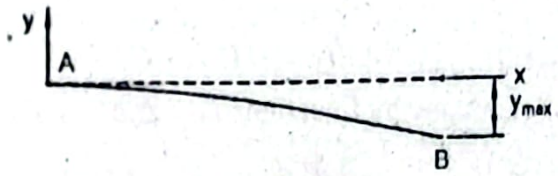

Elastic curve of deflected beam

static equilibrium condition, $+\uparrow \sum F_y = 0: \quad R_A = 0$

$+\circlearrowleft \sum M_A = 0;$

or, $M_A - M_0 = 0$ or, $M_A = M_0$

ending moment, for $0 < x < a$ $\quad M_x = -M_A = -M_0$

/e have an equation of elastic curve of a deflected beam,

$$EI\frac{d^2y}{dx^2} = M$$

herefore, $$EI\frac{d^2y}{dx^2} = -M_0$$

ntegrating we have, $$EI\frac{dy}{dx} = -M_0x + C_1 \qquad (i)$$

Jsing boundary condition at $x = 0$, $\frac{dy}{dx} = 0$ we find,

Constant, $C_1 = 0$

Substituting the value of $C_1 = 0$ in Equation(i),

$$EI\frac{dy}{dx} = -M_0 x$$

Again integrating, $$EIy = -\frac{M_0 x^2}{2} + C_2$$

Using boundary condition at $x = 0,\ y = 0$ we find,

Constant, $C_2 = 0$

Substituting this value in Equation(ii),

$$EIy = -\frac{M_0 x^2}{2}$$

Bending moment, for $a < x < L$ $M_x = 0$

Therefore, $$EI\frac{d^2 y}{dx^2} = 0$$

Integrating, $$EI\frac{dy}{dx} = C_3$$

At $x = a$, the slope is same by Equations (i) and (iv), therefore,

$$C_3 = -M_0 a$$

Substituting this value in Equation (iv),

$$EI\frac{dy}{dx} = -M_0 a$$

Again integrating, $$EIy = -M_0 ax + C_4$$

At $x = a$, the deflection is same by Equations (ii) and(v), therefore,

$$-\frac{M_0 a^2}{2} = -M_0 a^2 + C_4$$

$$\text{or, } C_4 = \frac{M_0 a^2}{2}$$

Substituting this value in Equation(v),

$$EIy = -M_0 ax + \frac{M_0 a^2}{2}$$

Therefore, the required equations of elastic curve of the beam are,

For $0 < x < a$ $$EIy = -\frac{M_0 x^2}{2}$$ *Answer*

For $a < x < L$ and $$EIy = -M_0 ax + \frac{M_0 a^2}{2}$$ *Answer*

Deflection is maximum at the free end, therefore, substituting $x = L$ and $y =$ Equation (vi) we find,

$$EIy_{max} = -M_0 aL + \frac{M_0 a^2}{2}$$

$$y_{max} = -\frac{M_0 a}{EI}\left(L - \frac{a}{2}\right) \text{ Answer}$$

oblem P5.8:

simply supported beam of length L carries a uniformly distributed load of w over its ire length and a concentrated load of P at the mid point as shown in Figure P5.8. ing double integration method, find the equation of elastic curve of the beam and an pression of maximum deflection.

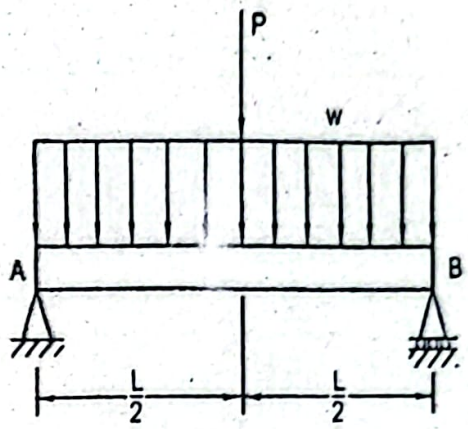

Figure P5.8

iven Data:

ength of beam $= L$

niformly distributed load $= w$

oncentrated load $= P$

o Find:

Equation of elastic curve

Expression of maximum deflection, y_{max}

olution:

ree body diagram of the entire beam and the elastic curve of the beam in the deflected ondition are shown in the figures below.

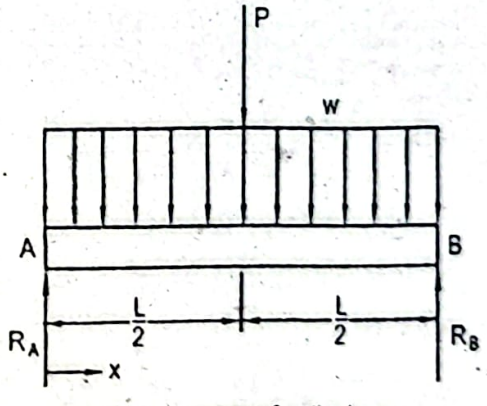

Free body diagram of entire beam

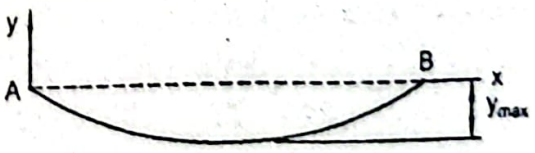

Elastic curve of deflected beam

In static equilibrium condition,

$$+\uparrow \sum F_y = 0$$

$$\text{or, } R_A + R_B - wL - P = 0$$

$$\text{or, } R_A + R_B = wL + P$$

For symmetric loading, $R_A = R_B = \frac{wL}{2} + \frac{P}{2}$

Bending moment,

For $0 < x < L/2$ $M_x = R_A x - \frac{wx^2}{2}$

$$M_x = \left(\frac{wL}{2} + \frac{P}{2}\right)x - \frac{wx^2}{.2}$$

We have an equation of elastic curve of a deflected beam,

$$EI\frac{d^2y}{dx^2} = M$$

Therefore, $EI\frac{d^2y}{dx^2} = \left(\frac{wL}{2} + \frac{P}{2}\right)x - \frac{wx^2}{2}$

Integrating we have, $EI\frac{dy}{dx} = \left(\frac{wl}{2} + \frac{P}{2}\right)\frac{x^2}{2} - \frac{wx^3}{6} + C_1$

Using boundary condition at $x = \frac{L}{2}$, $\frac{dy}{dx} = 0$ we find,

$$0 = \left(\frac{wL}{2} + \frac{P}{2}\right)\frac{L^2}{8} - \frac{wL^3}{48} + C_1$$

$$\text{or, } C_1 = -\frac{wL^3}{24} - \frac{PL^2}{16}$$

Substituting this value in Equation (i),

$$EI\frac{dy}{dx} = \left(\frac{wL}{2} + \frac{P}{2}\right)\frac{x^2}{2} - \frac{wx^3}{6} - \frac{wL^3}{24} - \frac{PL^2}{16}$$

Again integrating, $Ely = \left(\frac{wL}{2} + \frac{P}{2}\right)\frac{x^3}{6} - \frac{wx4}{24} - \frac{wL^3}{24}x - \frac{PL^2}{16}x + C_2$

Using boundary condition at $x = 0,\ y = 0$ we find,

Constant, $C_2 = 0$

Substituting this value in Equation (ii),

$$Ely = \left(\frac{wL}{2} + \frac{P}{2}\right)\frac{x^3}{6} - \frac{wx^4}{24} - \frac{wL^3}{24}x - \frac{PL^2}{16}x$$

Therefore, the required equation of the elastic curve,

$$Ely = -\frac{wx^4}{24} + \frac{wx^3L}{12} - \frac{wL^3}{24}x + \frac{Px^3}{12} - \frac{PL^2x}{16}$$ *Answer*

ce the deflection is maximum at the mid point, substituting $x = L/2$ and $y = y_{max}$ in
ation *(iii)*, the expression of the maximum deflection becomes,

$$EIy_{max} = -\frac{wL^4}{384} + \frac{wL^4}{96} - \frac{wL^4}{48} + \frac{PL^3}{96} - \frac{PL^3}{32}$$

$$\text{or, } y_{max} = -\frac{1}{EI}\left[\frac{5wL^4}{384} + \frac{PL^3}{48}\right] \textit{ Answer}$$

blem P5.9:

ng double integration method, find an expression of maximum deflection for a simply ported beam AB loaded by a couple M_0 as shown in Figure P5.9.

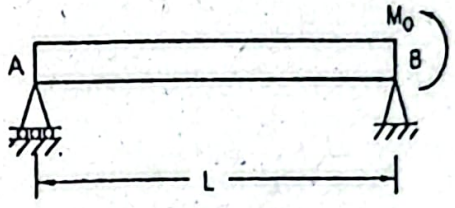

Figure P5.9

ven Data:

ngth of beam $= L$

uple $= M_0$

Find:

xpression of maximum deflection, y_{max}

lution:

ee body diagram of the entire beam, bending moment diagram and the elastic curve of beam in the deflected condition are shown in the figures below.

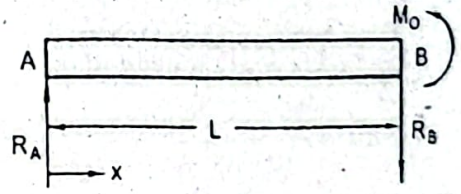

Free body diagram of entire beam

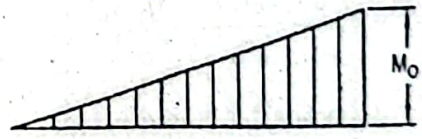

Bending moment diagram

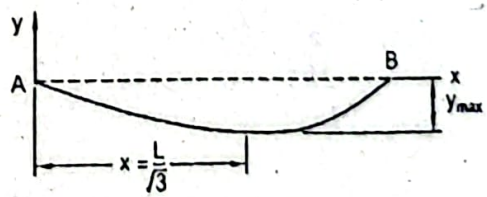

Elastic curve of deflected beam

n static equilibrium condition,

$$+\circlearrowleft \sum M_A = 0$$

$$M_0 - R_B \times L = 0$$

$$\text{or, } R_B = \frac{M_0}{L}$$

$$+\uparrow \sum F_y = 0;$$

$$R_A - R_B = 0$$

$$\text{or, } R_A = R_B = \frac{M_0}{L}$$

Bending moment,

For $0 < x < L$ $$M_x = R_A x = \frac{M_0}{L} x$$

We have an equation of elastic curve of a deflected beam,

$$EI \frac{d^2y}{dx^2} = M$$

Therefore, $$EI \frac{d^2y}{dx^2} = \frac{M_0}{L} x$$

Integrating we have, $$EI \frac{dy}{dx} = \frac{M_0 x^2}{2L} + C_1$$

Again integrating, $$EIy = -\frac{M_0 x^3}{6L} + C_1 x + C_2$$

Using boundary condition at $x = 0,\ y = 0$ we find,

Constant, $$C_2 = 0$$

And at $x = L,\ y = 0$ constant, $$C_1 = -\frac{M_0 L}{6}$$

Substituting these values of constants C_1 and C_2 in Equation (ii),

$$EIy = \frac{M_0 x^3}{6L} - \frac{M_0 L}{6} x \qquad (i$$

Substituting the value of C_1 in Equation (i) we find,

$$EI \frac{dy}{dx} = \frac{M_0 x^2}{2L} - \frac{M_0 L}{6} \qquad (i$$

To locate the point of maximum deflection substituting slope $\frac{dy}{dx} = 0$ in Equation (i we find,

$$0 = \frac{M_0 x^2}{2L} - \frac{M_0 L}{6}$$

$$\text{or, } x = \frac{L}{\sqrt{3}}$$

Now substituting this value of x in Equation (iii) one obtains,

$$EIy_{max} = \frac{M_0 L^2}{18\sqrt{3}} - \frac{M_0 L^2}{6\sqrt{3}} = -\frac{\sqrt{3} M_0 L^2}{27}$$

$$y_{max} = -\frac{\sqrt{3}M_0L^2}{27EI} \quad \textit{Answer}$$

oblem P5.10:

ing double integration method, find the equations of elastic curve and maximum flection in between two supports of an overhanging beam subjected to a concentrated id of P at its free end as shown in Figure P5.10.

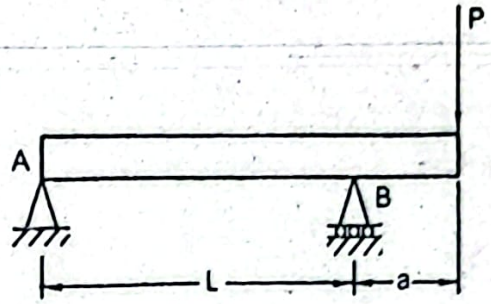

Figure P5.10

ven Data:

ncentrated load $= P$

Find:

quation of elastic curve

Maximum deflection, y_{max}

lution:

ee body diagram of the entire beam and the elastic curve of the beam in the deflected ndition are shown in the figures below.

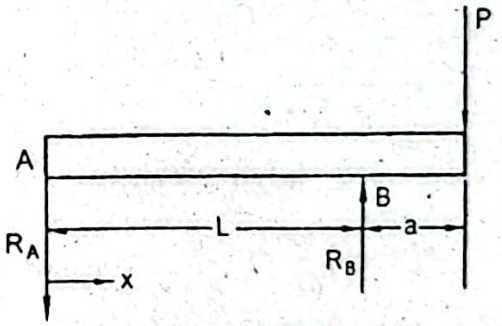

Free body diagram of entire beam

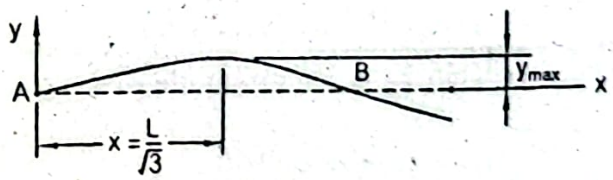

Elastic curve of deflected beam

static equilibrium condition, $+\uparrow \sum F_y = 0$:

$$\text{or, } -R_A + R_B - P = 0$$

$$\text{or, } -R_A + R_B = P$$

$$+\circlearrowleft \sum M_A = 0;$$

$$R_B \times L - P(L+a) = 0$$

$$\text{or, } R_B = \frac{P(L+a)}{L}$$

Therefore, $$R_A = R_B - P$$

$$\text{or, } R_A = \frac{P(L+a)}{L} - P = \frac{Pa}{L}$$

Bending moment, $$M_x = -R_A x = -\frac{Pa}{L}x$$

We have an equation of elastic curve of a deflected beam,

$$EI\frac{d^2y}{dx^2} = M$$

Therefore, $$EI\frac{d^2y}{dx^2} = -\frac{Pa}{L}x$$

Integrating we have, $$EI\frac{dy}{dx} = -\frac{Pa}{2L}x^2 + C_1$$

Again integrating, $$EIy = -\frac{Pax^3}{6L} + +C_1x + C_2$$

Using boundary condition at $x = 0,\ y = 0$ we find,

Constant, $$C_2 = 0$$

Again using boundary condition at $x = L,\ y = 0$ one obtains,

$$0 = -\frac{paL^2}{6} + C_1L$$

$$\text{or, } C_1 = \frac{PaL}{6}$$

Substituting these values in Equation(ii), the required equation of the elastic curve,

$$EIy = -\frac{Pax^3}{6L} + \frac{PaL}{6}x \quad \textit{Answer}$$

Substituting the value of constant C_1 in Equation (i),

$$EI\frac{dy}{dx} = -\frac{Pax^2}{2L} + \frac{PaL}{6}$$

Now to locate the point of maximum deflection substituting $\frac{dy}{dx} = 0$ we find,

$$0 = -\frac{Pax^2}{2L} + \frac{PaL}{6}$$

$$\text{or, } x = \frac{L}{\sqrt{3}}$$

Substituting this value of x in Equation (iii) we find,

$$EIy_{max} = -\frac{PaL^3}{6L3\sqrt{3}} + \frac{PaL}{6}\frac{L}{\sqrt{3}}$$

$$\text{or, } y_{max} = -\frac{\sqrt{3}PaL^2}{27EI} \quad \textit{Answer}$$

oblem P5.11:

sing double integration method, find an expression of maximum deflection for a simply pported beam of length L subjected to a non-central concentrated load P as shown in gure P5.11.

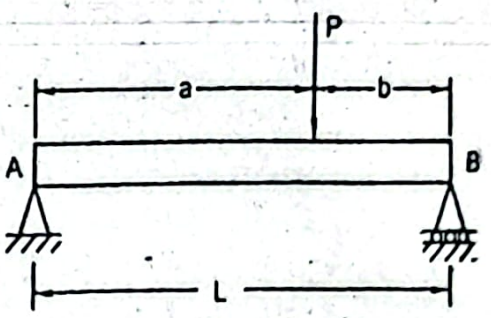

Figure P5.11

iven Data:

ength of beam $= L$

oncentrated load $= P$

Find:

Expression of maximum deflection, y_{max}

lution:

ee body diagram of the entire beam and the elastic curve of the beam in the deflected ndition are shown in the figures below.

static equilibrium condition,

$$+\circlearrowleft \sum M_A = 0;$$

$$\text{or, } R_B L = -Pa = 0 \quad \text{or, } R_B = \frac{Pa}{L}$$

gain,

$$+\circlearrowleft \sum M_B = 0:$$

$$\text{or, } -R_A + Pb = 0 \quad \text{or, } R_A = \frac{Pb}{L}$$

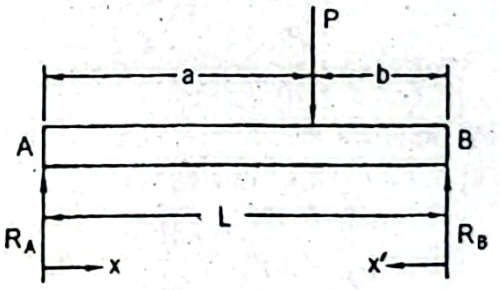

Free body diagram of entire beam

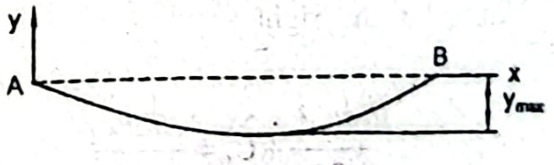

Elastic curve of deflected beam

Bending moment at the left side,

For $0 < x < a$ $\qquad M_x = R_A x = \frac{Pb}{L} x$

Bending moment at the right side,

For $0 < x' < b$ $\qquad M_{x'} = R_B x' = \frac{Pa}{L} x'$

We have an equation of elastic curve of a deflected beam,

$$EI \frac{d^2y}{dx^2} = M$$

Therefore, we obtain, $\qquad EI \frac{d^2y}{dx^2} = \frac{Pb}{L} x$

$$EI \frac{d^2y}{dx'^2} = \frac{Pa}{L} x'$$

Integrating Equations (i) and (ii), $\quad EI \frac{dy}{dx} = \frac{Pbx^2}{2L} + C_1$

and, $\quad EI \frac{dy}{dx'} = \frac{Pbx'^2}{2L} + C_2$

Again integrating Equations (iii) and (iv),

$$EIy = \frac{Pbx^3}{6L} + + C_1 x + C_3$$

and $\quad EIy = \frac{Pax'^3}{6L} + C_2 x' + C_4$

Using boundary condition at $x = 0,\ y = 0$ in Equation (v),

Constant, $\qquad C_3 = 0$

and at $x' = 0,\ y = 0$ in Equation (vi),

Constant, $\qquad C_4 = 0$

Substituting the values of constants C_3 and C_4 in Equations (v) and (vi) respecti

$$EIy = \frac{Pbx^3}{6L} + C_1 x$$

and $\quad EIy = \frac{Pax'^3}{6L} + C_2 x'$

Since the deflection of the left segment at $x = a$ is equal to the deflection at th segment at $x' = b$, therefore, from Equations (vii) and $(viii)$,

$$\frac{Pba^3}{6L} + C_1 a = \frac{Pab^3}{6L} + C_2 b$$

Since at the point of loading the slope of the left segment is equal in magnitu opposite in sign to the slope of the right segment, therefore, from Equations and (iv),

$$\frac{Pba^2}{2L} + C_1 = -\frac{Pab^2}{2L} - C_2$$

Note: It happens because coordinates x and x' have been chosen from the opposite ends.

Now from Equations (ix) and (x), $C_1 = -\frac{Pab}{6L}(L+b)$

Substituting this value in Equation (vii),

$$EIy = \frac{Pbx^3}{6L} - \frac{Pab}{6L}(L+b)$$

$$= \frac{Pbx}{6L}[x^2 - a(a+b)] \qquad (xi)$$

Substituting the value of C_1 in Equation (iii),

$$EI\frac{dy}{dx} = \frac{Pbx^2}{2L} - \frac{Pab}{6L}(L+b) \qquad (xii)$$

Deflection will be maximum at the point where $\frac{dy}{dx} = 0$, therefore, from Equation (xii),

$$x = \sqrt{\frac{1}{3}a(L+b)} = \frac{1}{3}\sqrt{3a(L+b)} \qquad (xiii)$$

Maximum deflection is obtained by substituting the value of x in Equation (xi),

$$y_{max} = -\frac{Pab(L+b)\sqrt{3a(L+b)}}{27EIL} \quad \textit{Answer}$$

Problem P5.12:

A cantilever beam of length L carries a uniformly distributed load of w over its entire length and a concentrated load of P at its free end as shown in Figure P5.12. Using double integration method, find an expression of maximum deflection.

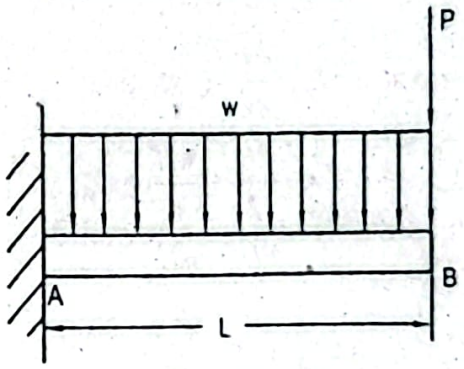

Figure P5.12

Given Data:

Length of beam $= L$

Uniformly distributed load $= w$

Concentrated load $= P$

To Find:

- Expression of maximum deflection, y_{max}

Solution:

Free body diagram of the entire beam and the elastic curve of the beam in the deflected condition are shown in the figures below.

Bending moment, $$M_x = -Px - \frac{wx^2}{2}$$

We have an equation of elastic curve of a deflected beam,

$$EI\frac{d^2y}{dx^2} = M$$

Therefore, $$EI\frac{d^2y}{dx^2} = -Px - \frac{wx^2}{2}$$

Integrating, $$EI\frac{dy}{dx} = -\frac{Px^2}{2} - \frac{wx^3}{6} + C_1$$

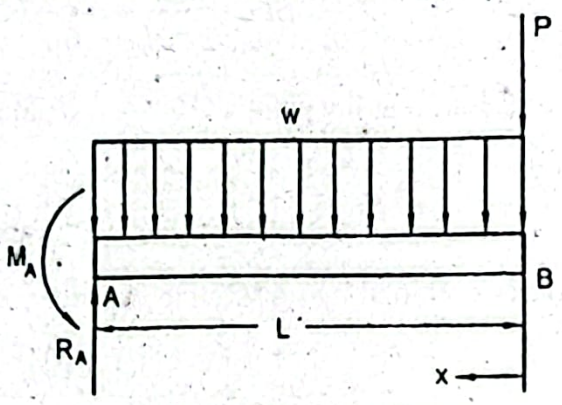

Free body diagram of entire beam

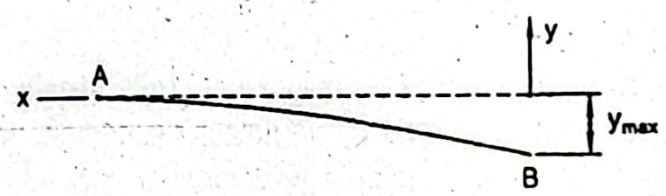

Elastic curve of deflected beam

Using boundary condition at $x = L$, $\frac{dy}{dx} = 0$ we find,

$$0 = -\frac{PL^2}{2} - \frac{wL^3}{6} + C_1$$

$$\text{or, } C_1 = \frac{PL^2}{2} + \frac{wL^3}{6}$$

Substituting this value in Equation(i),

$$EI\frac{dy}{dx} = -\frac{Px^2}{2} - \frac{wx^3}{6} + \frac{PL^2}{2} + \frac{wL^3}{6}$$

Again integrating, $$Ely = -\frac{Px^3}{6} - \frac{wx^4}{24} + \frac{PL^2}{2}x + \frac{wL^3}{6}x + C_2$$

Using boundary condition at $x = L$, $y = 0$ one obtains,

$$0 = -\frac{PL^3}{6} - \frac{wL^4}{24} + \frac{PL^3}{2} + \frac{wL^4}{6} + C_2$$

$$\text{or, } C_2 = -\frac{PL^3}{3} - \frac{wL^4}{8}$$

Substituting this value in Equation (ii),

$$EIy = -\frac{Px^3}{6} - \frac{wx^4}{24} + \frac{PL^2}{2}x + \frac{wL^3}{6}x - \frac{PL^3}{3} - \frac{wL^4}{8} \quad (iii)$$

Now to find the expression of maximum deflection which occurs at the free end, that is, at $x = 0$, we obtain from Equation (iii),

$$EIy_{max} = -\frac{PL^3}{3} - \frac{wL^4}{8}$$

$$\text{or, } y_{max} = -\frac{1}{EI}\left[\frac{PL^3}{3} + \frac{wL^4}{8}\right] \textit{Answer}$$

Problem P5.13:

Using double integration method find an expression of maximum deflection of a cantilever beam of length L subjected to a uniformly distributed load of w over half of its length from its free end as shown in Figure P5.13.

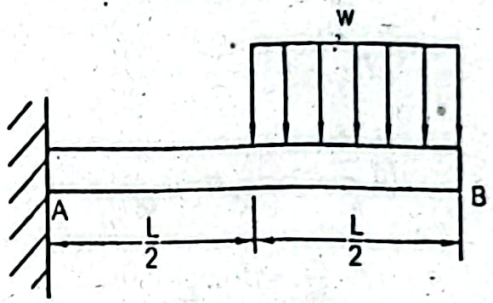

Figure P5.13

Given Data:

Length of beam = L

Uniformly distributed load = w

To Find:

- Expression of maximum deflection, y_{max}

Solution:

Free body diagram of the entire beam and the elastic curve of the beam in the deflected condition are shown in the figures below.

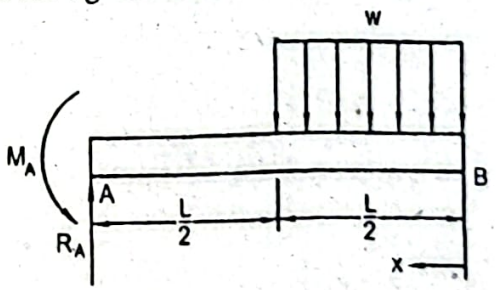

Free body diagram of entire beam

Elastic curve of deflected beam

Bending moment,

For $0 < x < \frac{L}{2}$ $\qquad M_x = -\frac{wx^2}{2}$

We have an equation of elastic curve of a deflected beam,

$$EI\frac{d^2y}{dx^2} = M$$

Therefore, $\qquad EI\frac{d^2y}{dx^2} = -\frac{wx^2}{2}$

Integrating, $\qquad EI\frac{dy}{dx} = -\frac{wx^3}{6} + C_1$

Bending moment,

For $L/2 < x < L$ $\qquad M_x = -\frac{wL}{2}\left(x - \frac{L}{4}\right)$

$$= -\frac{wLx}{2} + \frac{wL^2}{8}$$

Therefore, $\qquad EI\frac{d^2y}{dx^2} = -\frac{wLx}{2} + \frac{wL^2}{8}$

Integrating, $\qquad EI\frac{dy}{dx} = -\frac{wLx^2}{4} + \frac{wL^2}{8}x + C_2$

Using boundary condition at $x = L$, $\frac{dy}{dx} = 0$ one finds,

$$0 = -\frac{wL^3}{4} + \frac{wL^3}{8}x + C_2$$

$$\text{or, } C_2 = \frac{wL^3}{4} - \frac{wL^3}{8} = \frac{wL^3}{8}$$

Substituting this value of C_2 in Equation (ii),

$$EI\frac{dy}{dx} = -\frac{wLx^2}{4} + \frac{wL^2}{8}x + \frac{wL^3}{8}$$

Again integrating, $\qquad EIy = -\frac{wLx^3}{12} + \frac{wL^2}{16}x^2 + \frac{wL^3}{8}x + C_3$

Using boundary condition at $x = L, y = 0$ we find,

$$0 = -\frac{wL^4}{12} + \frac{wL^4}{16} + \frac{wL^4}{8} + C_3$$

$$\text{or, } C_3 = -\frac{5wL^4}{48}$$

Substituting this value of C_3 in Equation (iv),

$$EIy = -\frac{wLx^3}{12} + \frac{wL^2}{16}x^2 + \frac{wL^3x}{8} - \frac{5wL^4}{48}$$

From Equation (i) the slope at $x=\frac{L}{2}$,

$$EI\frac{dy}{dx}=-\frac{wL^3}{48}+C_1$$

From Equation (iii) the slope at $x=\frac{L}{2}$,

$$EI\frac{dy}{dx}=-\frac{wL^3}{16}+\frac{wL^3}{16}+\frac{wl^3}{8}=\frac{wL^3}{8}$$

At $x=\frac{L}{2}$, the slope by these Equations will be equal, therefore,

$$-\frac{wL^3}{48}+C_1=\frac{wL^3}{8}$$

$$\text{or, } C_1=\frac{wL^3}{8}+\frac{wL^3}{48}=\frac{7wL^3}{48}$$

Substituting this value in Equation (i),

$$EI\frac{dy}{dx}=-\frac{wx^3}{6}+\frac{7wL^3}{48}$$

Integrating,

$$Ely=-\frac{wx^4}{24}+\frac{7wL^3x}{48}+C_4 \qquad (vi)$$

At $x=\frac{L}{2}$,

$$Ely=-\frac{wL^4}{384}+\frac{7wL^4}{96}+C_4$$

From Equation (v) at $x=\frac{L}{2}$, $Ely=-\frac{wL^4}{96}+\frac{wL^4}{64}+\frac{wL^4}{16}-\frac{5wL^4}{48}=-\frac{7wL^4}{192}$

Since the deflection at $x=\frac{L}{2}$ by these two equations is same, therefore,

$$C_4-\frac{wL^4}{384}+\frac{7wL^4}{96}=-\frac{7wL^4}{192}$$

$$\text{or, } C_4=-\frac{7wL^4}{192}+\frac{wL^4}{384}-\frac{7wL^4}{96}$$

$$\text{or, } C_4=-\frac{41wL^4}{384}$$

Substituting this value of C_4 in Equation(vi),

$$Ely=-\frac{wx^4}{24}+\frac{7wL^3x}{48}-\frac{41wL^4}{384}$$

Since at the free end of the beam the deflection is maximum, therefore substituting $x=0$ we find,

$$Ely=-\frac{41wL^4}{384}$$

or, $y_{max} = -\frac{}{384EI}$ *Answer*

Problem P5.14:

Using double integration method find the equations of elastic curve of the overhang beam carrying two equal concentrated loads P at the free ends as shown in Figure P5.

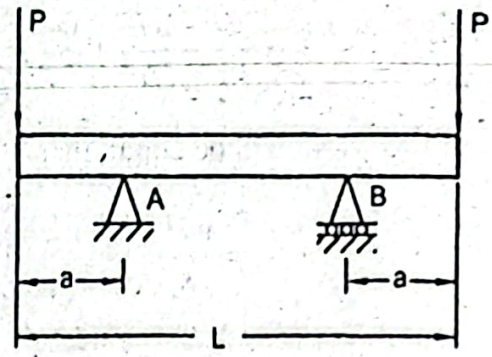

Figure P5.14

Given Data:

Length of beam = L

Concentrated load = P

To Find:

- Equations of elastic curve

Solution:

Free body diagram of the entire beam and the elastic curve of the beam in the defle condition are shown in the figures below.

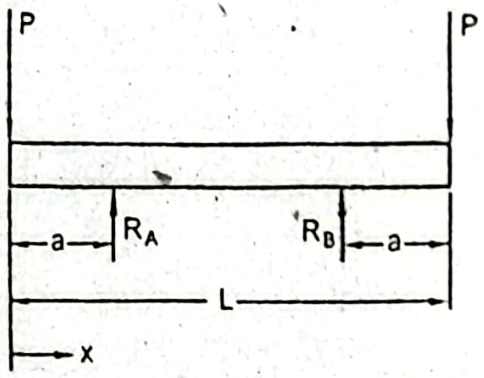

Free body diagram of entire beam

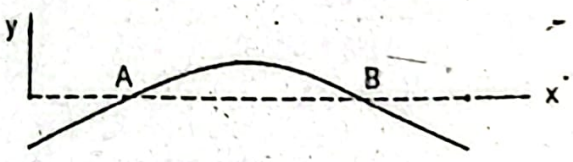

Elastic curve of deflected beam

In static equilibrium condition,

$$+\uparrow \sum F_y = 0;$$

$$\text{or, } R_A + R_B - P - P = 0$$

$$\text{or, } R_A + R_B = 2P$$

For symmetric loading, $R_A = R_B = P$

Bending moment,

For $0 < x < a$ $\quad M_x = -Px$

We have an equation of elastic curve of a deflected beam,

$$EI\frac{d^2y}{dx^2} = M$$

Therefore, $$EI\frac{d^2y}{dx^2} = -Px$$

Integrating we find, $$EI\frac{dy}{dx} = -\frac{P}{2}x^2 + C_1 \qquad (i)$$

Again integrating, $$EIy = -\frac{Px^3}{6} + C_1x + C_2 \qquad (ii)$$

Bending moment,

For $a < x < (L-a)$ $\quad M_x = -Px + P(x-a) = -Pa$

That is, $$EI\frac{d^2y}{dx^2} = -Pa$$

Integrating, $$EI\frac{dy}{dx} = -Pax + C_3 \qquad (iii)$$

Using boundary condition at $x = L/2$, $\frac{dy}{dx} = 0$ one obtains,

$$0 = -\frac{PaL}{2} + C_3$$

$$C_3 = \frac{PaL}{2}$$

Substituting this value of C_3 in Equation (iii),

$$EI\frac{dy}{dx} = -Pax + \frac{PaL}{2} \qquad (iv)$$

Since the slope at $x = a$ will be same by two Equations (i) and (iv), therefore,

$$-Pa^2 + \frac{PaL}{2} = -\frac{Pa^2}{2} + C_1$$

$$\text{or, } C_1 = \frac{PaL}{2} - \frac{Pa^2}{2}$$

Substituting this value of C_1 in Equation (ii) we find,

$$EIy = -\frac{Px^3}{6} + \left(\frac{PaL}{2} - \frac{Pa^2}{2}\right)x + C_2 \qquad (v)$$

Now using boundary condition at $x = a$, $y = 0$ one obtains,

$$0 = -\frac{Pa^3}{6} + \left(\frac{Pa^2L}{2} - \frac{Pa^3}{2}\right) + C_2$$

$$\text{or, } C_2 = \frac{2Pa^3}{3} - \frac{Pa^2L}{2}$$

Substituting this value of C_2 in Equation (v),

$$Ely = -\frac{Px^3}{6} + \left(\frac{PaL}{2} - \frac{Pa^2}{2}\right)x + \frac{2Pa^3}{3} - \frac{Pa^2L}{2} \quad (vi)$$

Integrating Equation (iv), $Ely = -\frac{Pax^2}{2} + \frac{PaL}{2}x + C_1$ (vii)

Using boundary condition at $x = a$, $y = 0$ one finds,

$$0 = -\frac{Pa^3}{2} + \frac{Pa^2L}{2} + C_1$$

$$\text{or, } C_1 = \frac{Pa^3}{2} - \frac{Pa^2L}{2}$$

Substituting the value of constant C_1 in Equation (vii),

$$Ely = -\frac{Pax^2}{2} + \frac{PaL}{2}x + \frac{Pa^3}{2} - \frac{Pa^2L}{2} \quad (viii)$$

Therefore, the required equations of elastic curves are,

For $0 < x < a$ $\quad Ely = -\frac{Px^3}{6} + \left(\frac{PaL}{2} - \frac{Pa^2}{2}\right)x + \frac{2Pa^3}{3} - \frac{Pa^2L}{2}$ ***Answer***

For $a < x < (L-a)$ and $Ely = -\frac{Pax^2}{6} + \frac{paL}{2}x + \frac{Pa^3}{2} - \frac{Pa^2L}{2}$ ***Answer***

Problem P5.15:

A simply supported beam carries uniformly distributed loads of w symmetrically place from its ends as shown in Figure P5.15. Using double integration method find a expression of maximum deflection.

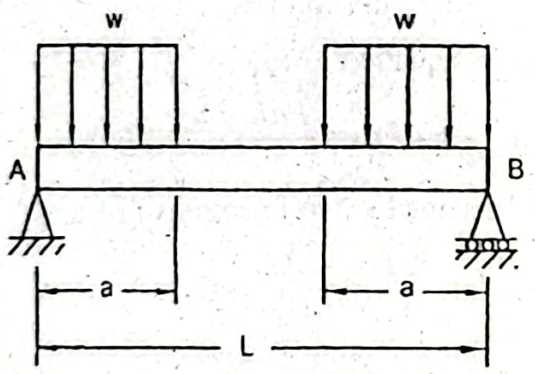

Figure P5.15

Given Data:

Length of beam $= L$

Uniformly distributed load $= w$

To Find:

- Expression of maximum deflection, y_{max}

Solution:

Free body diagram of the entire beam and the elastic curve of the beam in the deflected condition are shown in the figures below.

For symmetric loading, $R_A = R_B = wa$

Bending moment,

For $0 < x < a$ $$M_x = R_A x - \frac{wx^2}{2} = \left(wax - \frac{wx^2}{2} \right)$$

We have an equation of elastic curve of a deflected beam,

$$EI\frac{d^2y}{dx^2} = M$$

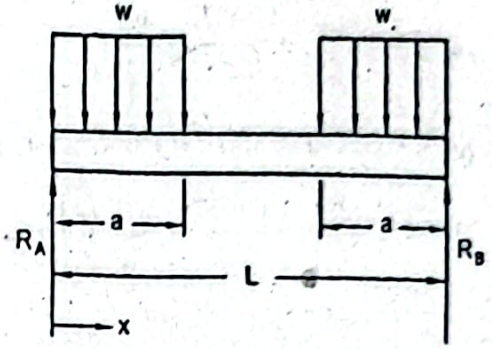

Free body diagram of entire beam

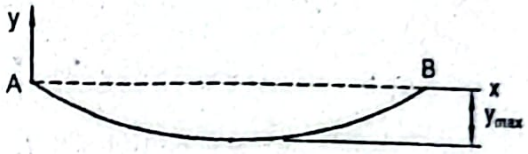

Elastic curve of deflected beam

Therefore, $$EI\frac{d^2y}{dx^2} = wax - \frac{wx^2}{2}$$

Integrating we find, $$EI\frac{dy}{dx} = \frac{wa}{2}x^2 - \frac{wx^3}{6} + C_1 \qquad (i)$$

Again integrating, $$EIy = \frac{wax^3}{6} - \frac{wx^4}{24} + C_1x + C_2 \qquad (ii)$$

Bending moment,

For $a < x < (L-a)$ $$M_x = R_A x - wa\left(x - \frac{a}{2}\right)$$

$$= wax - wax + \frac{wa^2}{2} = \frac{wa^2}{2}$$

Therefore, $$EI\frac{d^2y}{dx^2} = \frac{wa^2}{2}$$

Integrating, $$EI\frac{dy}{dx} = \frac{wa^2}{2}x + C_3 \qquad (iii)$$

Again integrating, $$EIy = \frac{wa^2}{4}x^2 + C_3x + C_4 \qquad (iv)$$

Using boundary condition at $x = 0,\ y = 0$ in Equation (ii), $C_2 = 0$

Using boundary condition at $x = L/2,\ \frac{dy}{dx} = 0$ in Equation (iii),

$$0 = \frac{wa^2L}{4} + C_3$$

$$\text{or, } C_3 = -\frac{wa^2L}{4}$$

At $x = a$, the slope of the beam will be same by Equations (i) and (iii), therefore,

$$\frac{wa^3}{2} - \frac{wa^3}{6} + C_1 = \frac{wa^3}{2} - \frac{wa^2L}{4} \quad \text{(Putting value of C}$$

$$\text{or, } C_1 = \frac{wa^3}{2} - \frac{wa^2L}{4} - \frac{wa^3}{2} + \frac{wa^3}{6}$$

$$\text{or, } C_1 = \frac{wa^3}{6} - \frac{wa^2L}{4}$$

At $x = a$, the deflection will be same by Equations (ii) and (iv), therefore,

$$\frac{wa^4}{6} - \frac{wa^4}{24} + \left(\frac{wa^3}{6} - \frac{wa^2L}{4}\right)a = \frac{wa^4}{4} - \frac{wa^2L}{4} + C_4$$

$$\text{or, } C_4 = \frac{wa^4}{4} - \frac{wa^4}{24} + \frac{wa^4}{6} - \frac{wa^3L}{4} - \frac{wa^4}{4} + \frac{wa^3L}{4}$$

$$\text{or, } C_4 = \frac{wa^4}{24}$$

Substituting the values of constants C_3 and C_4 in Equation (iv),

$$EIy = \frac{wa^2}{4}x^2 - \frac{wa^2L}{4}x + \frac{wa^4}{24}$$

Maximum deflection occurs at the mid point, that is, at $x = L/2$,

Therefore,
$$EIy = \frac{wa^2}{16}L^2 - \frac{wa^2L^2}{8} + \frac{wa^4}{24}$$

$$\text{or, } y = \frac{1}{EI}\left[\frac{wa^4}{24} - \frac{wa^2L^2}{16}\right]$$

$$\text{or, } y_{max} = \frac{wa^4}{24EI} - \frac{wa^2L^2}{16EI} \quad \textit{Answer}$$

Problem P5.16:

A simply supported beam of length L carries a triangular distribution of load wi maximum value of w_0 as shown in Figure P5.16. Using double integration metho derive an equation of elastic curve of the beam.

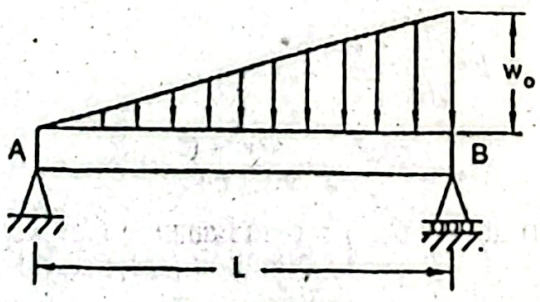

Figure P5.16

Given Data:

Length of beam $= L$

Load = Triangular distribution with maximum value of w_0

To Find:

- Equation of elastic curve

Solution:

Free body diagram of the entire beam and the elastic curve of the beam in the deflected condition are shown in the figures below.

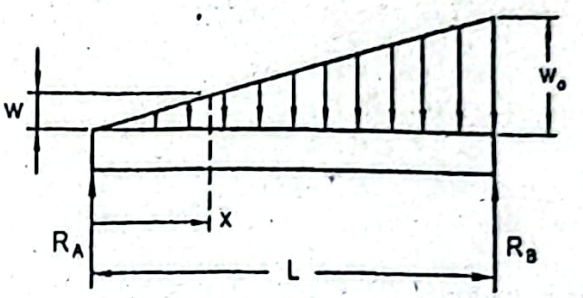

Free body diagram of entire beam

Elastic curve of deflected beam

In static equilibrium condition,

$$+\uparrow \sum F_y = 0;$$

$$\text{or, } R_A + R_B - \frac{1}{2} w_0 L = 0$$

$$+\circlearrowleft \sum M_A = 0;$$

$$\text{or, } R_B \times L - \frac{1}{2} w_0 L \times \frac{2}{3} L = 0$$

$$\text{or, } R_B = \frac{w_0 L}{3}$$

Therefore, $$R_A = \frac{w_0 L}{2} - R_B = \frac{w_0 L}{2} - \frac{w_0 L}{3} = \frac{w_0 L}{6}$$

Bending moment, $$M_x = R_A x - \frac{1}{2} wx \times \frac{x}{3}$$

$$= \frac{w_0 L x}{6} - \frac{w x^2}{6}$$

We have from the similar triangles,

$$\frac{w}{x} = \frac{w_0}{L}$$

$$\text{or, } w = \frac{w_0 x}{L}$$

Substituting this value, $M_x = \frac{w_0 Lx}{6} - \frac{w_0 x}{6L}$

We have an equation of elastic curve of a deflected beam,

$$EI\frac{d^2y}{dx^2} = M$$

Therefore, $EI\frac{d^2y}{dx^2} = \frac{w_0 Lx}{6} - \frac{w_0 x^3}{6L}$

Integrating we have, $EI\frac{dy}{dx} = \frac{w_0 L}{12}x^2 - \frac{w_0 x^4}{24L} + C_1$

Again integrating, $EIy = \frac{w_0 Lx^3}{36} - \frac{w_0 x^5}{120L} + C_1 x + C_2$

Using boundary condition at $x = 0,\ y = 0$,

Constant, $C_2 = 0$

Substituting this value in Equation (ii),

$$EIy = \frac{w_0 Lx^3}{36} - \frac{w_0 x^5}{120L} + C_1 x$$

Using boundary condition at $x = L,\ y = 0$ one finds,

$$0 = \frac{wL^4}{36} - \frac{w_0 L^4}{120} + C_1 L$$

$$\text{or, } C_1 = -\frac{7w_0 L^3}{360}$$

Substituting this value of constant in Equation (iii),

$$EIy = \frac{w_0 Lx^3}{36} - \frac{w_0}{120L}x^5 - \frac{7w_0 L^3 x}{360}$$

$$\text{or, } EIy = -\frac{w_0 x^5}{120L} + \frac{w_0 Lx^3}{36} - \frac{7w_0 L^3 x}{360}$$ *Answer*

Problem P5.17:

A simply supported beam of length L is subjected to a couple M_o as shown in Fig P5.17. Using double integration method, derive the equations of elastic curve of the be and an expression of deflection at the point of application of the couple.

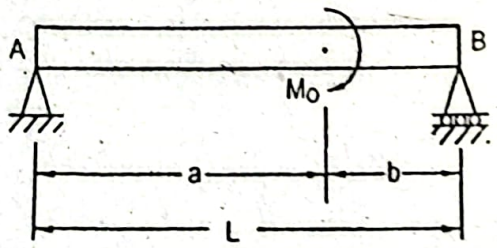

Figure P5.17

Given Data:

Length of beam $= L$

Couple $= M_0$

To Find:

- Equations of elastic curve
- Expression of deflection at point of application of couple

Solution:

Free body diagram of the entire beam and the elastic curve of the beam in the deflected condition are shown in the figures below.

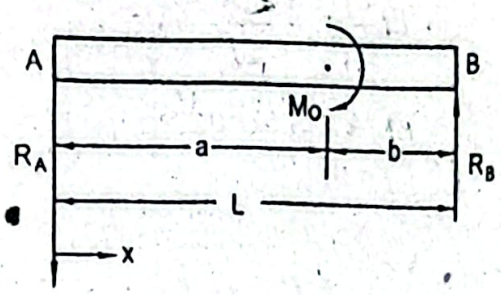

Free body diagram of entire beam

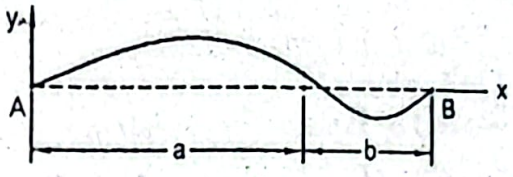

Elastic curve of deflected beam

In static equilibrium condition,

$$+\circlearrowleft \sum M_A = 0:$$

or, $R_B \times L - M_0 = 0$

or, $R_B = \frac{M_0}{L}$

$$+\uparrow \sum F_y = 0;$$

or, $-R_A + R_B = 0$

Therefore, $R_A = R_B = \frac{M_0}{L}$

Bending moment,

For $0 < x < a$ $M_x = -R_A x = -\frac{M_0 x}{L}$

We have an equation of elastic curve of a deflected beam,

$$EI\frac{d^2y}{dx^2} = M$$

Therefore, $EI\frac{d^2y}{dx^2} = -\frac{M_0 x}{L}$

Integrating we have, $EI\frac{dy}{dx} = -\frac{M_0}{2L}x^2 + C_1$ (i)

Again integrating, $EIy = -\frac{M_0 x^3}{6L} + C_1 x + C_2$ (ii)

Bending moment,

For a

$$\text{or, } M_x = -\frac{M_0 x}{L} + M_0$$

Therefore, $$EI\frac{d^2y}{dx^2} = -\frac{M_0 x}{L} + M_0$$

Integrating, $$EI\frac{dy}{dx} = -\frac{M_0 x^2}{2L} + M_0 x + C_3$$

Again integrating, $$Ely = -\frac{M_0 x^3}{6L} + \frac{M_0 x^2}{2} + C_3 x + C_4$$

Using boundary condition at $x = 0,\ y = 0$ in Equation (ii),

$$C_2 = 0$$

Using boundary condition at $x = L,\ y = 0$ in Equation (iv),

$$0 = -\frac{M_0 L^2}{6} + \frac{M_0 L^2}{2} + C_3 L + C_4$$

$$\text{or, } C_3 L + C_4 = -\frac{M_0 L^2}{3}$$

At $x = 0$, the slope will be same by Equations (i) and (iii), therefore,

$$-\frac{M_0 a^2}{2L} + C_1 = -\frac{M_0 a^2}{2L} + M_0 a + C_3$$

$$\text{or, } C_1 - C_3 = M_0 a$$

At $x = a$, the deflection will be same by Equations (ii) and (iv), therefore,

$$-\frac{M_0 a^3}{6L} + C_1 a = -\frac{M_0 a^3}{6L} + \frac{M_0 a^2}{2} + C_3 a + C_4$$

$$\text{or, } C_1 a - C_3 a - C_4 = \frac{M_0 a^2}{2}$$

$$\text{or, } a(C_1 - C_3) - C_4 = \frac{M_0 a^2}{2} \qquad (v$$

From Equations (vi) and (vii), $M_0 a^2 - C_4 = \frac{M_0 a^2}{2}$

$$\text{or, } C_4 = \frac{M_0 a^2}{2}$$

Substituting the value of C_4 in Equation (v),

$$C_3 L + \frac{M_0 a^2}{2} = -\frac{M_0 L^2}{3}$$

$$\text{or, } C_3 = -\frac{M_0 L}{3} - \frac{M_0 a^2}{2L}$$

Substituting this value of C_3 in Equation (vi),

$$C_1 + \frac{M_0 L}{3} + \frac{M_0 a^2}{2L} = M_0 a$$

$$\text{or, } C_1 = M_0 a - \frac{M_0 L}{3} - \frac{M_0 a^2}{2L}$$

Substituting the values of constants in Equations *(ii)* and *(iv)*, the required equations of elastic curve become,

For $0 < x < a$ $$EIy = -\frac{M_0 x^3}{6L} + M_0 a x - \frac{M_0 L x}{3} - \frac{M_0 a^2 x}{2L}$$ *Answer (viii)*

For $a < x < L$ $$EIy = -\frac{M_0 x^3}{6L} + \frac{M_0 x^2}{2} - \frac{M_0 L x}{3} - \frac{M_0 a^2 x}{2L} + \frac{M_0 a^2}{2}$$ *Answer (ix)*

Now to find the deflection at the point of application of the couple, substituting $x = a$ in Equation *(viii)*,

$$EIy = -\frac{M_0 a^3}{6L} + M_0 a^2 - \frac{M_0 L a}{3} - \frac{M_0 a^3}{2L}$$

$$\text{or, } EIy = \frac{M_0 a}{3L}\left(-L^2 + 3La - 2a^2\right)$$

$$\text{or, } y = \frac{M_0 a}{3EIL}\left(-L^2 + 3La - 2a^2\right)$$ *Answer*

Problem P5.18:

A simply supported beam of length L carries a uniformly distributed load of w over half of its length as shown in Figure P5.18. Determine an expression of deflection at the mid span using double integration method.

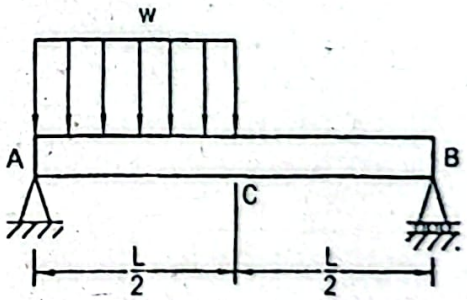

Figure P5.18

Given Data:

Length of beam $= L$

Uniformly distributed load $= w$

To Find:

- Expression of deflection at mid span, y_c

Solution:

Free body diagram of the entire beam and the elastic curve of the beam in the deflected condition are shown in the figures below.

In static equilibrium condition,

$$+\uparrow \sum F_y = 0;$$

or, $R_A + R_B = \frac{wL}{2}$

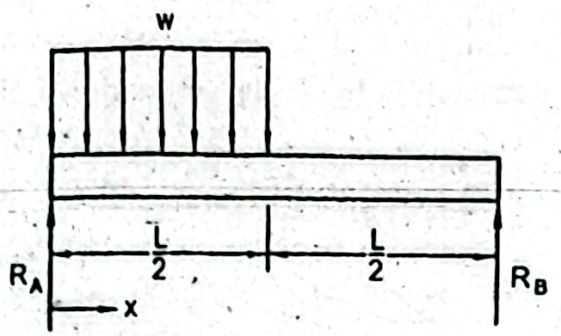

Free body diagram of entire beam

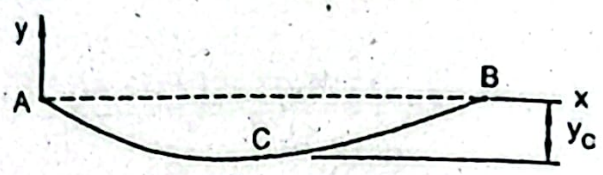

Elastic curve of deflected beam

$$+\circlearrowleft \sum M_A = 0;$$

or, $R_B \times L - \frac{1}{2} wL \times \frac{L}{4} = 0$

or, $R_B = \frac{wL}{8}$

Therefore, $R_A = \frac{wL}{2} - R_B = \frac{wL}{2} - \frac{wL}{8} = \frac{3wL}{8}$

Bending moment,

For $0 < x < \frac{L}{2}$ $M_x = R_A x - \frac{1}{2} wx^2$

$= \frac{3wLx}{8} - \frac{wx^2}{2}$

We have an equation of elastic curve of a deflected beam,

$$EI \frac{d^2y}{dx^2} = M$$

Therefore, $EI \frac{d^2y}{dx^2} = \frac{3wLx}{8} - \frac{wx^2}{2}$

Integrating we have, $EI \frac{dy}{dx} = \frac{3wL}{16} x^2 - \frac{wx^3}{6} + C_1$

Again integrating, $EIy = \frac{3wLx^3}{48} - \frac{wx^4}{24} + C_1 x + C_2$

Using boundary condition at $x = 0,\ y = 0$,

Constant, $C_2 = 0$

nding moment,

r $\frac{L}{2} < x < L$

$$M_x = R_A x - \frac{wL}{2}\left(x - \frac{L}{4}\right)$$

$$= \frac{3wLx}{8} - \frac{wLx}{2} + \frac{wL^2}{8}$$

$$= -\frac{wLx}{8} + \frac{wL^2}{8}$$

erefore,

$$EI\frac{d^2y}{dx^2} = -\frac{wLx}{8} + \frac{wL^2}{8}$$

tegrating

$$EI\frac{dy}{dx} = -\frac{wLx^2}{16} + \frac{wL^2x}{8} + C_3 \qquad (iii)$$

gain integrating,

$$EIy = -\frac{wLx^3}{48} + \frac{wL^2x^2}{16} + C_3x + C_4 \qquad (iv)$$

sing boundary condition at $x = L,\ y = 0$,

$$0 = -\frac{wL^4}{48} + \frac{wL^4}{16} + C_3L + C_4$$

$$\text{or, } 0 = -\frac{wL^4}{24} + C_3L + C_4 \qquad (v)$$

t $x = \frac{L}{2}$, the slope is same by Equations (i) and (iii), therefore,

$$\frac{3wL^3}{64} - \frac{wL^3}{48} + C_1 = -\frac{wL^3}{64} + \frac{wL^3}{16} + C_3$$

$$\text{or, } C_1 - C_3 = \frac{wL^3}{48} \qquad (vi)$$

At $x = \frac{L}{2}$, the deflection is same by Equations (ii) and (iv), therefore,

$$\frac{3wL^4}{384} - \frac{wL^4}{384} + C_1\frac{L}{2} = -\frac{wL^4}{384} + \frac{wL^4}{64} + C_3\frac{L}{2} + C_4$$

$$\text{or, } \frac{L}{2}(C_1 - C_3) = \frac{wL^4}{128} = C_4 \qquad (vii)$$

Substituting the value from Equation (vi),

$$\frac{wL^4}{96} - \frac{wL^4}{128} = C_4$$

$$\text{or, } C_4 = \frac{wL^4}{384}$$

Substituting this value of C_4 in Equation (v),

$$-\frac{wL^4}{24} = C_3L + \frac{wL^4}{384}$$

$$\text{or, } C_3 = -\frac{\quad}{384}$$

Substituting the values of C_3 and C_4 in Equation *(iv)*,

$$Ely = -\frac{wLx^3}{48} + \frac{wL^2x^2}{16} - \frac{17wL^3x}{384} + \frac{wL^4}{384}$$

Now to find the deflection at the mid span, substituting $x = L/2$ in Equation *(viii)*

$$Ely_c = -\frac{wL^4}{384} + \frac{wL^4}{64} - \frac{17wL^4}{768} + \frac{wL^4}{384}$$

$$\text{or, } Ely_c = -\frac{5wL^4}{768}$$

$$\text{or, } y_c = -\frac{5wL^4}{768EI} \quad \textit{Answer}$$

Problem P5.19:

A cantilever beam of length L is subjected to a triangular distribution of load maximum value of w_0 as shown in Figure P5.19. Find an equation of elastic curve o beam and an expression of maximum deflection using double integration method.

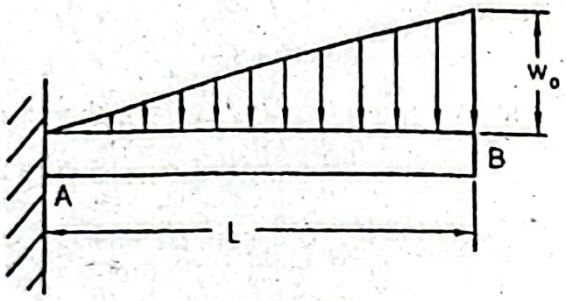

Figure P5.19

Given Data:

Length of beam = L

Load = Triangular distribution with maximum value of w_0

To Find:

- Equation of elastic curve of beam
- Expression of maximum deflection

Solution:

Free body diagram of the entire beam and the elastic curve of the beam in the deflec condition are shown in the figures below.

In static equilibrium condition,

$$+\uparrow \sum F_y = 0:$$

$$\text{or, } R_A - \frac{1}{2}w_0 L = 0$$

$$\text{or, } R_A = \frac{1}{2}w_0 L$$

$$+\circlearrowleft \sum M_A = 0;$$

$$\text{or, } M_A - \frac{1}{2} w_0 L \times \frac{2}{3} L = 0$$

$$\text{or, } M_A = \frac{w_0 L^2}{3}$$

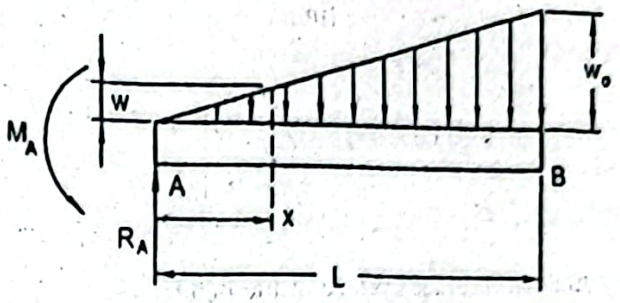

Free body diagram of entire beam

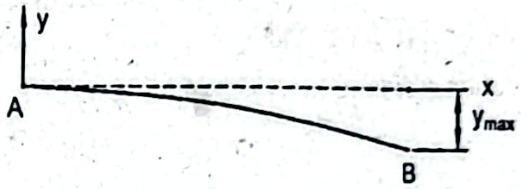

Elastic curve of deflected beam

Bending moment, $$M_x = R_A x - \frac{1}{2} wx \times \frac{x}{3} - M_A$$

$$\text{or, } M_x = \frac{w_0 L x}{2} - \frac{w x^2}{6} - \frac{w_0 L^2}{3}$$

But we have from the similar triangles,

$$\frac{w}{x} = \frac{w_0}{L}$$

$$\text{or, } w = \frac{x}{L} w_0$$

Substituting, $$M_x = \frac{w_0 L x}{2} - \frac{w_0 x^3}{6L} - \frac{w_0 L^2}{3}$$

We have an equation of elastic curve of a deflected beam,

$$EI \frac{d^2 y}{dx^2} = M$$

Therefore, $$EI \frac{d^2 y}{dx^2} = \frac{w_0 L x}{2} - \frac{w_0 x^3}{6L} - \frac{w_0 L^2}{3}$$

Integrating we find, $$EI \frac{dy}{dx} = \frac{w_0 L x^2}{4} - \frac{w_0 x^4}{24L} - \frac{w_0 L^2}{3} x + C_1 \qquad (i)$$

Using boundary condition at $x = 0$, $\frac{dy}{dx} = 0$,

Constant, $$C_1 = 0$$

Substituting this value of C_1 in Equation (i),

$$EI\frac{dy}{dx} = \frac{w_0 L x^2}{4} - \frac{w_0 x^4}{24L} - \frac{w_0 L^2}{3}x$$

Again integrating, $$Ely = \frac{w_0 L x^3}{12} - \frac{w_0 x^5}{120L} - \frac{w_0 L^2 x^2}{6} + C_2$$

Using boundary condition $x = 0,\ y = 0$ we find,

Constant, $C_2 = 0$

Substituting this value of C_2 in Equation (ii) we find,

$$Ely = \frac{w_0 L x^3}{12} - \frac{w_0 x^5}{120L} - \frac{w_0 L^2 x^2}{6}$$

That is, the required equation of elastic curve of the beam,

$$Ely = -\frac{w_0 x^5}{120L} + \frac{w_0 L x^3}{12} - \frac{w_0 L^2 x^2}{6} \quad \textit{Answer}$$

Maximum deflection occurs at the free end of the beam; therefore, substituting $x = L$ the free end in Equation (iii) we find,

$$Ely_{max} = -\frac{w_0 L^4}{120} + \frac{w_0 L^4}{12} - \frac{w_0 L^4}{6}$$

$$\text{or, } y_{max} = -\frac{11 w_0 L^4}{120EI} \quad \textit{Answer}$$

Problem P5.20:

A simply supported beam of length L carries triangular distributed loads with maxim value of w_0 as shown in Figure P5.20. Using double integration method, find expression of maximum deflection

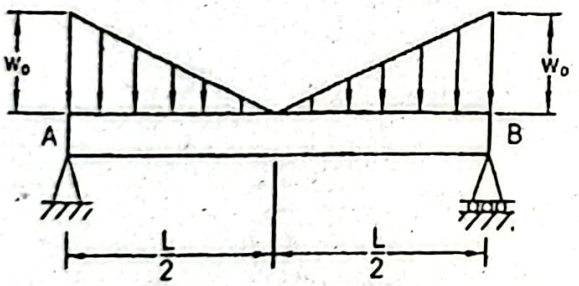

Figure P5.20

Given Data:

Length of beam $= L$

Load = Triangular distribution with maximum value of w_0

To Find:

- Expression of maximum deflection

Solution:

Free body diagram of the entire beam and the elastic curve of the beam in the deflected condition are shown in the figures below.

In static equilibrium condition,

$$+\uparrow \sum F_y = 0;$$

$$\text{or, } R_A + R_B - \frac{1}{2} w_0 \frac{L}{2} - \frac{1}{2} w_0 \frac{L}{2} = 0$$

$$\text{or, } R_A + R_B = \frac{1}{2} w_0 L$$

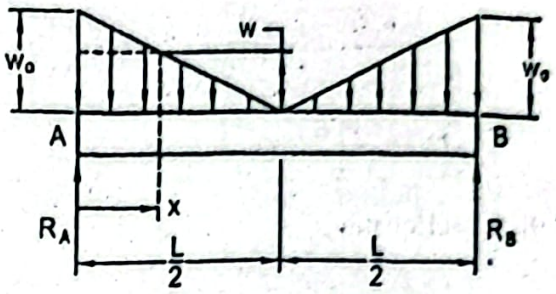

Free body diagram of entire beam

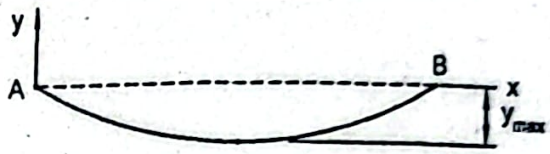

Elastic curve of deflected beam

For symmetric loading, $R_A = R_B = \frac{w_0 L}{4}$

Bending moment, $M_x = R_A x - wx \times \frac{x}{2} - \frac{1}{2}(w_0 - w) x \frac{2}{3} x$

$$\text{or, } M_x = \frac{w_0 L x}{4} - \frac{w x^2}{2} - \frac{x^2}{3}(w_0 - w)$$

$$\text{or, } M_x = \frac{w_0 L x}{4} - \frac{w_0 x^2}{3} - \frac{1}{6} w x^2 \qquad (i)$$

But we have from the similar triangles,

$$\frac{w}{\left(\frac{L}{2} - x\right)} = \frac{w_0}{\frac{L}{2}}$$

$$\text{or, } w = \left(\frac{L}{2} - x\right) \frac{2 w_0}{L} = w_0 \left(1 - \frac{2x}{L}\right)$$

Substituting this value of w in Equation (i),

For $0 < L < \frac{L}{2}$ $$M_x = \frac{w_0 L x}{4} - \frac{w_0 x^2}{3} - \frac{w_0}{6}\left(1 - \frac{2x}{L}\right) x^2$$

$$\text{or, } M_x = \frac{w_0 L x}{4} - \frac{w_0 x^2}{2} + \frac{w_0 x^3}{3L}$$

We have an equation of elastic curve of a deflected beam,

$$EI \frac{d^2 y}{dx^2} = M$$

Therefore, $$EI \frac{d^2 y}{dx^2} = \frac{w_0 L x}{4} - \frac{w_0 x^2}{2} + \frac{w_0 x^3}{3L}$$

Integrating we find, $$EI\frac{dy}{dx}=\frac{w_0Lx^2}{8}-\frac{w_0x^3}{6}+\frac{w_0x^4}{12L}+C_1$$

Using boundary condition at $x=L/2$, $\frac{dy}{dx}=0$ in Equation *(ii)*,

$$0=\frac{w_0L^3}{32}-\frac{w_0L^3}{48}+\frac{w_0L^3}{192}+C_1$$

$$\text{or, } C_1=-\frac{w_0L^3}{64}$$

Substituting this value of C_1 in Equation *(ii)*,

$$EI\frac{dy}{dx}=\frac{w_0Lx^2}{8}-\frac{w_0x^3}{6}-+\frac{w_0x^4}{12L}-\frac{w_0L^3}{64}$$

Again integrating, $$Ely=\frac{w_0Lx^3}{24}-\frac{w_0x^4}{24}+\frac{w_0x^5}{60L}-\frac{w_0L^3x}{64}+C_2$$

Using boundary condition $x=0$, $y=0$,

Constant, $$C_2=0$$

Substituting this value of C_2 in Equation *(iii)*,

$$Ely=\frac{w_0Lx^3}{24}-\frac{w_0x^4}{24}+\frac{w_0x^5}{60L}-\frac{w_0L^3x}{64}$$

Maximum deflection occurs at the mid point of the beam.
Therefore, substituting $x=L/2$ in Equation *(iv)* we find,

$$Ely_{max}=\frac{w_0L^4}{192}-\frac{w_0L^4}{384}+\frac{w_0L^4}{1920}-\frac{w_0L^4}{128}$$

$$\text{or, } y_{max}=-\frac{3w_0L^4}{640}\ \textit{Answer}$$

Problem P5.21:

A simply supported beam of length L is subjected to two equal couples symmetrically placed as shown in Figure P5.21. Find the equations of elastic curve of beam and an expression of deflection at the mid point of the beam using double integration method.

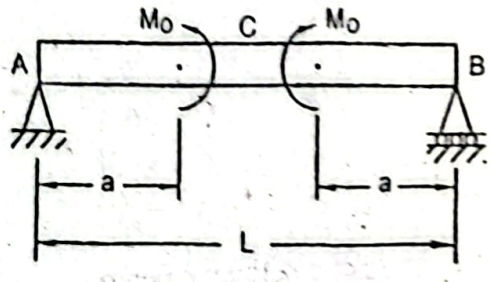

Figure P5.21

Given Data:
Length of beam = L
Couple = M_0

Find:

Equations of elastic curve

Expression of deflection at mid point of beam

olution:

ee body diagram of the entire beam and the elastic curve of the beam in the deflected ondition are shown in the figures below.

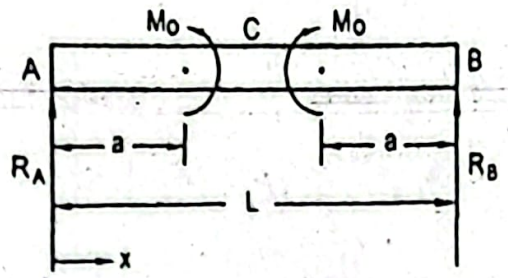

Free body diagram of entire beam

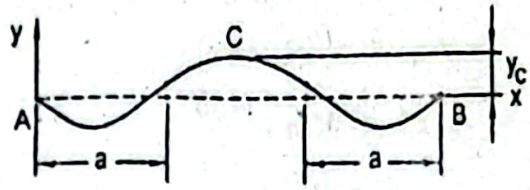

Elastic curve of deflected beam

n static equilibrium condition,

$$+\uparrow \sum F_y = 0;$$

or, $R_A + R_B = 0$

$$+\circlearrowleft \sum M_A = 0;$$

or, $R_B \times L - M_0 + M_0 = 0$

or, $R_B = 0$

herefore, $R_A = 0$

ending moment,

or $0 < x < a$ $M_x = 0$

Ve have an equation of elastic curve of a deflected beam,

$$EI\frac{d^2y}{dx^2} = M$$

herefore, $$EI\frac{d^2y}{dx^2} = 0$$

ntegrating we have, $$EI\frac{dy}{dx} = C_1 \quad (i)$$

gain integrating, $$EIy = C_1x + C_2 \quad (ii)$$

ending moment,

or $a < x < (L-a)$ $M_x = -M_0$

herefore, $$EI\frac{d^2y}{dx^2} = -M_0$$

Integrating we have, $EI\frac{dy}{dx} = -M_0 x + C_3$

Again integrating, $Ely = -\frac{M_0 x^2}{2} + C_3 x + C_4$

Using boundary condition at $x = 0,\ y = 0$ in Equation *(ii)*,

Constant, $C_2 = 0$

Using boundary condition at $x = L/2,\ \frac{dy}{dx} = 0$ in Equation *(iii)* we find,

$$0 = -\frac{M_0 L}{2} + C_3$$

$$\text{or, } C_3 = \frac{M_0 L}{2}$$

Since the slope is same at $x = a$, by Equations *(i)* and *(iii)*, therefore,

$$C_1 = -M_0 a + C_3$$

$$\text{or, } C_1 = -M_0 a + \frac{M_0 L}{2}$$

Since the deflection at $x = a$ is same by Equations *(ii)* and *(iv)*, therefore,

$$C_1 a = -\frac{M_0 a^2}{2} + C_3 a + C_4$$

Substituting the values of constants C_1 and C_3 we find,

$$\left(-M_0 a + \frac{M_0 L}{2}\right)a = -\frac{M_0 a^2}{2} + \frac{M_0 La}{2} + C_4$$

$$\text{or, } C_4 = -\frac{M_0 a^2}{2}$$

Substituting the values of constants in Equation *(ii)* and *(iv)*, the equations of elastic curve become,

For $0 < x < a$ $\qquad Ely = \left(-M_0 a + \frac{M_0 L}{2}\right)x$

$$\text{or, } Ely = \frac{M_0}{2}(L - 2a)x \quad \textit{Answer}$$

For $a < x < (L - a)$ $\qquad Ely = -\frac{M_0 x^2}{2} + \frac{M_0 L}{2}x - \frac{M_0 a^2}{2}$

$$\text{or, } Ely = -\frac{M_0}{2}\left(x^2 - Lx + a^2\right) \textit{ Answer}$$

Now substituting $x = L/2$ in Equation *(vi)* the expression of deflection at the mid point C of the beam,

$$y_c = -\frac{M_0}{2EI}\left(\frac{L^2}{4} - \frac{L^2}{2} + a^2\right) = \frac{M_0}{8EI}\left(L^2 - 4a^2\right) \quad \textit{Answer}$$

Problem P5.22:

An overhanging beam of length L carries a uniformly distributed load of w over its entire length as shown in Figure P5.22. Using double integration method, find the expressions of deflection at its mid point and at the end.

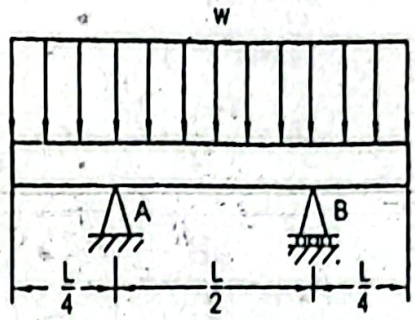

Figure P5.22

Given Data:

Length of beam $= L$

Uniformly distributed load $= w$

To Find:

Deflection at mid point, y_C

Deflection at end, y_D

Solution:

Free body diagram of the entire beam and the elastic curve of the beam in the deflected condition are shown in the figures below.

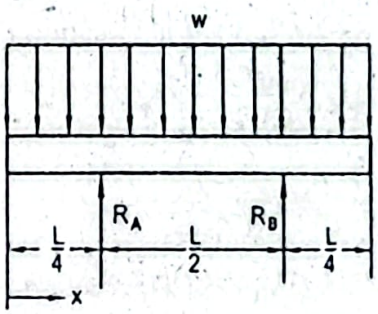

Free body diagram of entire beam

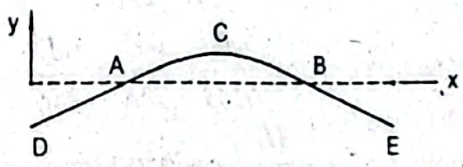

Elastic curve of deflected beam

For symmetric loading, $R_A = R_B = \dfrac{wL}{2}$

Bending moment,

For $0 < x < L/4$ $\quad M_x = -\dfrac{wx^2}{2}$

We have an equation of elastic curve of a deflected beam,

$$EI\frac{d^2y}{dx^2} = M$$

Therefore, $$EI\frac{d^2y}{dx^2} = -\frac{wx^2}{2}$$

Integrating we find, $$EI\frac{dy}{dx} = -\frac{wx^3}{6} + C_1$$

Again integrating, $$EIy = -\frac{wx^4}{24} + C_1x + C_2$$

Bending moment,

For $L/4 < x < \frac{3}{4}L$ $$M_x = -\frac{wx^2}{2} + R_A\left(x - \frac{L}{4}\right)$$

$$= -\frac{wx^2}{2} + \frac{wL}{2}\left(x - \frac{L}{4}\right)$$

$$= -\frac{wx^2}{2} + \frac{wLx}{2} - \frac{wL^2}{8}$$

Therefore, $$EI\frac{d^2y}{dx^2} = -\frac{wx^2}{2} + \frac{wLx}{2} - \frac{wL^2}{8}$$

Integrating we find, $$EI\frac{dy}{dx} = -\frac{wx^3}{6} + \frac{wLx^2}{4} - \frac{wL^2}{8}x + C_3$$

Again integrating, $$EIy = -\frac{wx^4}{24} + \frac{wLx^3}{12} - \frac{wL^2x^2}{16} + C_3x + C_4$$

Using boundary condition at $x = L/4$, $y = 0$ in Equation (ii) we find,

$$0 = -\frac{wL^4}{6144} + \frac{C_1L}{4} + C_2$$

$$\text{or, } \frac{C_1L}{4} + C_2 = \frac{wL^4}{6144}$$

Using boundary condition at $x = L/4$, $y = 0$ in Equation (iv),

$$0 = -\frac{wL^4}{6144} + \frac{wL^4}{768} - \frac{wL^4}{256} + C_3\frac{L}{4} + C_4$$

$$\text{or, } \frac{C_3L}{4} + C_4 = \frac{wL^4}{6144} - \frac{wL^4}{768} + \frac{wL^4}{256} = \frac{17wL^4}{6144}$$

Again using boundary condition at $x = \frac{3L}{4}$, $y = 0$ in Equation (iv),

$$0 = -\frac{81wL^4}{6144} + \frac{27wL^4}{768} - \frac{9wL^4}{256} + 3C_3\frac{L}{4} + C_4,$$

$$\text{or, } \frac{3C_3L}{4} + C_4 = \frac{81wL^4}{6144} - \frac{27wL^4}{768} + \frac{9wL^4}{256} = \frac{81wL^4}{6144}$$

Now solving from Equations (vi) and (vii)

$$C_3 = \frac{wL^3}{48} \text{ and } C_4 = -\frac{5wL^4}{2048}$$

Since at $x = L/4$, the slope by Equations (i) and (iii) will be same, therefore,

$$\frac{}{384} + C_1 = -\frac{}{384} + \frac{wL^2}{64} - \frac{wL^3}{32} + C_3$$

$$\text{or, } C_1 - C_3 = -\frac{wL^3}{64} \qquad (viii)$$

bstituting the value of C_3 in Equation *(viii)*,

$$C_1 = \frac{wL^3}{192}$$

w substituting the value of C_1 in Equation *(v)*,

$$C_2 = -\frac{7wL^4}{6144}$$

bstituting the values of C_1 and C_2 in Equation *(ii)* the equation of elastic curve is nd as,

r $0 < x < \frac{L}{4}$ $$EIy = -\frac{wx^4}{24} + \frac{wL^3}{192}x - \frac{7wL^4}{6144} \qquad (ix)$$

bstituting the values of C_3 and C_4 in Equation *(iv)* the equation of elastic curve is tained as,

r $\frac{L}{4} < x < \frac{3L}{4}$ $$EIy = -\frac{wx^4}{24} + \frac{wLx^3}{12} - \frac{wL^2x^2}{16} + \frac{wL^3}{48}x - \frac{5wL^4}{2048} \qquad (x)$$

bstituting $x = \frac{L}{2}$ in the above equation the deflection at the mid point of the beam is und as,

$$y_c = \frac{wL^4}{6144EI} \quad \textit{Answer}$$

ubstituting $x = 0$ in Equation *(ix)* the end deflection y_D becomes,

$$y_D = -\frac{7wL^4}{6144EI} \quad \textit{Answer}$$

roblem P5.23:

simply supported beam of length L carries a triangular distribution of load with naximum value of w_0 over half of its length as shown in Figure P5.23. Using double ntegration method, find the equations of elastic curve and an expression of deflection at nid point of the beam.

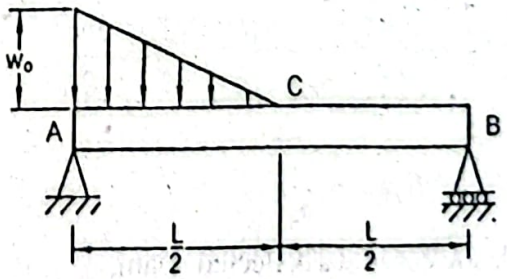

Figure P5.23

Given Data:

Length of beam $= L$

Load = Triangular distribution with maximum value of w_0

To Find:

- Equations of elastic curve
- Expression of deflection at mid point, y_c

Solution:

Free body diagram of the entire beam and the elastic curve of the beam in the de condition are shown in the figures below.

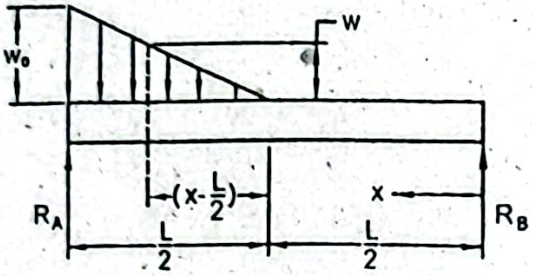

Free body diagram of entire beam

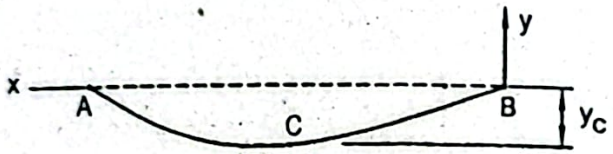

Elastic curve of deflected beam

In static equilibrium condition,

$$+\uparrow \sum F_y = 0;$$

$$\text{or, } R_A + R_B - \frac{1}{2} w_0 \frac{L}{2} = 0$$

$$\text{or, } R_A + R_B = \frac{w_0 L}{4}$$

$$+\circlearrowleft \sum M_A = 0;$$

$$\text{or, } R_B \times L - \frac{1}{2} w_0 \frac{L}{2} \times \frac{1}{3} \frac{L}{2} = 0$$

$$\text{or, } R_B = \frac{w_0 L}{24}$$

Therefore, $$R_A = \frac{w_0 L}{4} - R_B = \frac{w_0 L}{4} - \frac{w_0 L}{24} = \frac{5 w_0 L}{24}$$

Bending moment,

For $0 < x < \frac{L}{2}$ $$M_x = R_B x = \frac{w_0 L}{24} x$$

We have an equation of elastic curve of a deflected beam,

$$EI\frac{d^2y}{dx^2} = M$$

herefore, $$EI\frac{d^2y}{dx^2} = \frac{w_0 Lx}{24}$$

tegrating, $$EI\frac{dy}{dx} = \frac{w_0 Lx^2}{48} + C_1 \qquad (i)$$

gain integrating, $$EIy = \frac{w_0 Lx^3}{144} + C_1 x + C_2 \qquad (ii)$$

nding moment,

r $\frac{L}{2} < x < L$ $$M_x = R_B x - \frac{w}{2}\left(x - \frac{L}{2}\right)\frac{1}{3}\left(x - \frac{L}{2}\right)$$

$$= \frac{w_0 Lx}{24} - \frac{w}{6}\left(x - \frac{L}{2}\right)^2$$

om the similar triangles, $$\frac{w}{x - \frac{L}{2}} = \frac{w_0}{\frac{L}{2}}$$

or, $$w = \frac{2w_0}{L}\left(x - \frac{L}{2}\right)$$

bstituting the value of w we find the bending moment,

r $\frac{L}{2} < x < L$ $$M_x = \frac{w_0 Lx}{24} - \frac{w_0}{3L}\left(x - \frac{L}{2}\right)^3$$

$$= \frac{w_0 Lx}{24} - \frac{w_0}{3L}\left(x^3 - \frac{3x^2 L}{2} + \frac{3xL^2}{4} - \frac{L^3}{8}\right)$$

$$= \frac{w_0 Lx}{24} - \frac{w_0 x^3}{3L} + \frac{w_0 x^2}{2} - \frac{w_0 Lx}{4} + \frac{w_0 L^2}{24}$$

$$= -\frac{w_0 x^3}{3L} + \frac{w_0 x^2}{2} - \frac{5w_0 Lx}{24} + \frac{w_0 L^2}{24}$$

herefore, $$EI\frac{d^2y}{dx^2} = -\frac{w_0 x^3}{3L} + \frac{w_0 x^2}{2} - \frac{5w_0 Lx}{24} + \frac{w_0 L^2}{24}$$

tegrating we find, $$EI\frac{dy}{dx} = -\frac{w_0 x^4}{12L} + \frac{w_0 x^3}{6} - \frac{5w_0 Lx^2}{48} + \frac{w_0 L^2 x}{24} + C_3 \qquad (iii)$$

gain integrating, $$EIy = -\frac{w_0 x^5}{60L} + \frac{w_0 x^4}{24} - \frac{5w_0 Lx^3}{144} + \frac{w_0 L^2 x^2}{48} + C_3 x + C_4 \qquad (iv)$$

ing boundary condition at $x = 0,\ y = 0$, in Equation (ii),

$$C_2 = 0$$

ing boundary condition at $x = L,\ y = 0$ in Equation (iv) we find,

$$0 = -\frac{w_0 L^4}{60} + \frac{w_0 L^4}{24} - \frac{5w_0 L^4}{144} + \frac{w_0 L^4}{48} + C_3 L + C_4$$

$$\text{or, } C_3L + C_4 = -\frac{w_0L^4}{40}$$

Since the slope is same at $x = L/2$ by Equations (i) and (iii), therefore,

$$\frac{w_0L^3}{192} + C_1 = -\frac{w_0L^3}{192} + \frac{w_0L^3}{48} - \frac{5w_0L^3}{192} + \frac{w_0L^3}{48} + C_3$$

$$\text{or, } C_1 - C_3 = \frac{w_0L^3}{192}$$

Since the Deflection at $x = L/2$ is same by Equations (ii) and (iv), therefore,

$$\frac{w_0L^4}{115L} + \frac{C_1L}{2} = -\frac{w_0L^4}{1920} + \frac{w_0L^4}{384} - \frac{5w_0L^4}{1152} + \frac{w_0L^4}{192} + \frac{C_3L}{2} + C$$

$$\text{or, } \frac{L}{2}(C_1 - C_3) - C_4 = \frac{w_0L^4}{480}$$

From Equations (vi) and (vii) we find,

$$\frac{L}{2}\frac{w_0L^3}{192} - C_4 = \frac{w_0L^4}{480}$$

$$\text{or, } C_4 = \frac{w_0L^4}{1920}$$

Substituting this value of C_4 in Equation (v),

$$C_3 = -\frac{67w_0L^3}{5760}$$

Substituting this value in Equation (vi),

$$C_1 = \frac{w_0L^3}{192} - \frac{67w_0L^3}{5760} = -\frac{37w_0L^3}{5760}$$

Substituting the values of C_1 and C_2 in Equation (ii), the equation of elastic c becomes,

For $0 < x < L/2$ $$EIy = \frac{w_0Lx^3}{144} - \frac{37w_0L^3}{5760}x \quad \textit{Answer}$$ (v

Substituting the values of constants C_3 and C_4 in Equation (iv), the equation of ela curve is,

For $L/2 < x < L$ $$EIy = -\frac{w_0x^5}{60L} + \frac{w_0x^4}{24} - \frac{5w_0Lx^3}{144} + \frac{w_0L^2x^2}{48} - \frac{67w_0L^3x}{5760} + \frac{w_0L^4}{1920}$$ *Ans.* (i

Substituting $x = L/2$ in Equation $(viii)$, the expression of deflection at the mid point the beam,

$$EIy_c = \frac{w_0L^4}{1152} - \frac{37w_0L^4}{11520}$$

$$\text{or, } y_c = -\frac{27w_0L^4}{11520EI}$$

$$= -\frac{3w_0L^4}{1280EI} \quad \textit{Answer}$$

Problem P5.24:

A cantilever beam of length L supports a triangular distributed load over half of its half length and a uniformly distributed load w_o over the rest half of its length as shown in Figure P5.24. Using double integration method, find the equations of elastic curve and an expression of free end deflection.

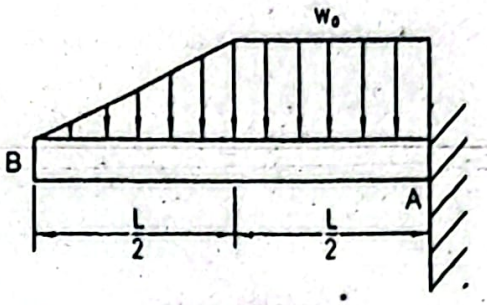

Figure P5.24

Given Data:

Length of beam $= L$

Load = Triangular and uniformly distributed

To Find:

- Equations of elastic curve
- Expression of free end deflection, y_B

Solution:

Free body diagram of the entire beam and the elastic curve of the beam in the deflected condition are shown in the figures below.

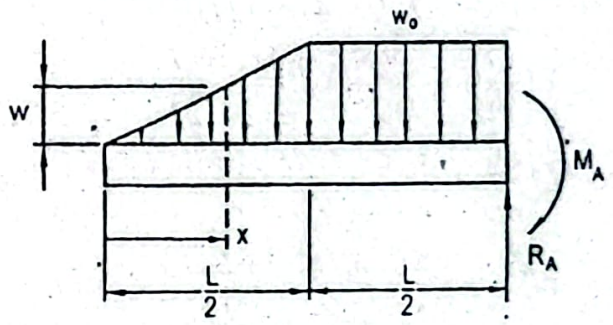

Free body diagram of entire beam

Elastic curve of deflected beam

Bending moment,

For $0 < x < \frac{L}{2}$ $\qquad M_x = -\frac{1}{2} wx \frac{x}{3} = -\frac{wx^2}{6}$

But we have from the similar triangles,

$$\frac{w}{x} = \frac{w_0}{L/2}$$

$$\text{or, } w = \frac{2w_0 x}{L}$$

Substituting, $$M_x = -\frac{w_0 x^3}{3L}$$

We have an equation of elastic curve of a deflected beam,

$$EI\frac{d^2y}{dx^2} = -\frac{w_0 x^3}{3L}$$

Integrating we find, $$EI\frac{dy}{dx} = -\frac{w_0 x^4}{12L} + C_1$$

Again integrating, $$EIy = -\frac{w_0 x^5}{60L} + C_1 x + C_2$$

Bending moment,

For $\frac{L}{2} < x < L$ $$M_x = -\frac{w_0}{2}\left(x - \frac{L}{2}\right)^2 - \frac{w_0 L}{4}\left(x - \frac{2}{3}\frac{L}{2}\right)$$

$$= -\frac{w_0}{2}\left(x^2 - Lx + \frac{L^2}{4}\right) - \frac{w_0 L}{4}\left(x - \frac{L}{3}\right)$$

$$= -\frac{w_0 x^2}{2} + \frac{w_0 Lx}{2} - \frac{w_0 L^2}{8} - \frac{w_0 Lx}{4} + \frac{w_0 L^2}{12}$$

$$= -\frac{w_0 x^2}{2} + \frac{w_0 Lx}{4} - \frac{w_0 L^2}{24}$$

Therefore, $$EI\frac{d^2y}{dx^2} = -\frac{w_0 x^2}{2} + \frac{w_0 Lx}{4} - \frac{w_0 L^2}{24}$$

Integrating we find, $$EI\frac{dy}{dx} = -\frac{w_0 x^3}{6} + \frac{w_0 Lx^2}{8} - \frac{w_0 L^2 x}{24} + \frac{w_0 L^2 x}{24} + C_3$$

Again integrating, $$EIy = -\frac{w_0 x^4}{24} + \frac{w_0 Lx^3}{24} - \frac{w_0 L^2 x^2}{48} + C_3 x + C_4$$

Using boundary condition at $x = L$, $\frac{dy}{dx} = 0$ in Equation *(iii)* we find,

$$0 = -\frac{w_0 L^3}{6} + \frac{w_0 L^3}{8} - \frac{w_0 L^3}{24} + C_3$$

$$\text{or, } C_3 = \frac{w_0 L^3}{12}$$

Using boundary condition at $x = L$, $y = 0$ in Equation *(iv)*,

$$0 = -\frac{w_0 L^4}{24} + \frac{w_0 L4}{24} - \frac{w_0 L^4}{48} + C_3 L + C_4$$

$$\text{or, } C_3 L + C_4 = \frac{w_0 L^4}{48}$$

Substituting the value of C_3 and solving $C_4 = -\frac{w_0 L^4}{16}$

Since the slope ... equations (i) and (iii), therefore,

$$-\frac{w_0L^3}{192}+C_1=-\frac{w_0L^3}{48}+\frac{w_0L^3}{32}-\frac{w_0L^3}{48}+C_3$$

Substituting the value of C_3 we find,

$$\text{or, } C_1=-\frac{w_0L^3}{48}+\frac{w_0L^3}{32}-\frac{w_0L^3}{48}+\frac{w_0L^3}{192}+\frac{w_0L^3}{12}$$

$$\text{or, } C_1=\frac{5w_0L^3}{64}$$

Since the deflection at $x = L/2$ is same by Equations (ii) and (iv), therefore,

$$-\frac{w_0L^4}{1920}+\frac{5w_0L^4}{128}+C_2=-\frac{w_0L^4}{384}+\frac{w_0L^4}{192}-\frac{w_0L^4}{192}+\frac{w_0L^4}{24}-\frac{w_0L^4}{16}$$

$$\text{or, } C_2=-\frac{119w_0L^4}{1920}$$

Substituting the values of constants C_1 and C_2 in Equation (ii) and substituting the values of C_3 and C_4 in Equation (iv), the required equations of elastic curve become,

For $0 < x < L/2$ $\quad EIy=-\frac{w_0x^5}{60L}+\frac{5w_0L^3x}{64}-\frac{119w_0L^4}{1920}$ **Answer** (v)

For $L/2 < x < L$ $\quad EIy=-\frac{w_0x^4}{24}+\frac{w_0Lx^3}{24}-\frac{w_0L^2x^2}{48}+\frac{w_0L^3}{12}x-\frac{w_0L^4}{16}$ **Answer** (vi)

Substituting $x = 0$ in Equation (v), the expression of deflection at the free end,

$$EIy_B=\frac{119w_0L^4}{-1920}$$

$$\text{or, } y_B=-\frac{119w_0L^4}{1920EI} \text{ Answer}$$

Problem P5.25:

A simply supported beam of length L carries a triangular distributed load over half of its length and a uniformly distributed load over the rest half of its length as shown in Figure P5.25. Determine the equations of elastic curve and an expression of deflection at the mid point of the beam using double integration method.

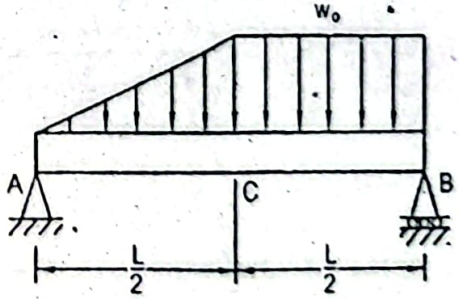

Figure P5.25

Given Data:

Length of beam = L

Load = Triangular and uniformly distributed

To Find:

- Equations of elastic curve of beam
- Expression of deflection at mid point, y_c

Solution:

Free body diagram of the entire beam and the elastic curve of the beam in the deflected condition are shown in the figures below.

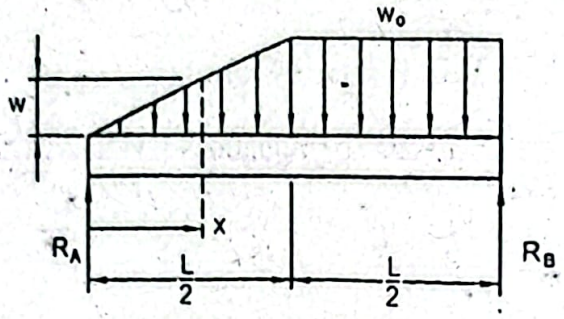

Free body diagram of entire beam

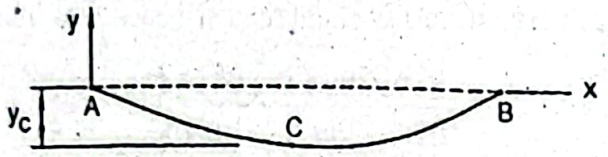

Elastic curve of deflected beam

In static equilibrium condition,

$$+\uparrow \sum F_y = 0;$$

$$\text{or, } R_A + R_B - \frac{1}{2} w_0 \frac{L}{2} - \frac{w_0 L}{2} = 0$$

$$\text{or, } R_A + R_B = \frac{3w_0 L}{4}$$

$$+\circlearrowleft \sum M_A = 0;$$

$$\text{or, } R_B \times L - \frac{w_0 L}{2} \frac{3L}{2} - \frac{w_0 L}{4} \frac{2}{3} \frac{L}{2} = 0$$

$$\text{or, } R_B = \frac{11 w_0 L}{24}$$

Therefore, $$R_A = \frac{3w_0 L}{4} - R_B = \frac{3w_0 L}{4} - \frac{11 w_0 L}{24} = \frac{7 w_0 L}{24}$$

Bending moment,

For $0 < x < \frac{L}{2}$ $$M_x = R_A x - \frac{1}{2} w x \frac{1}{3} x$$

$$= \frac{7 w_0 L x}{24} - \frac{w x^2}{6}$$

We have from the similar triangles,

$$\frac{w}{x} = \frac{w_0}{L/2}$$

or, $w = \frac{w_0}{L}$

Substituting the value values of R_A and w we find the bending moment,

$$M_x = \frac{7w_0Lx}{24} - \frac{w_0x^3}{3L}$$

We have an equation of elastic curve of a deflected beam,

$$EI\frac{d^2y}{dx^2} = M$$

Therefore, $$EI\frac{d^2y}{dx^2} = \frac{7w_0Lx}{24} - \frac{w_0x^3}{3L}$$

Integrating, $$EI\frac{dy}{dx} = \frac{7w_0Lx^2}{48} - \frac{w_0x^4}{12L} + C_1 \qquad (i)$$

Again integrating, $$EIy = \frac{7w_0Lx^3}{144} - \frac{w_0x^5}{60L} + C_1x + C_2 \qquad (ii)$$

Bending moment,

For $\frac{L}{2} < x < L$ $$M_x = R_Ax - \frac{w_0L}{4}\left(x - \frac{2}{3}\frac{L}{2}\right) - \frac{w_0}{2}\left(x - \frac{L}{2}\right)\left(x - \frac{L}{2}\right)$$

$$= \frac{7w_0lx}{24} - \frac{w_0Lx}{4} + \frac{w_0L^2}{12} - \frac{w_0x^2}{2} + \frac{w_0Lx}{2} - \frac{w_0L^2}{8}$$

$$= -\frac{w_0x^2}{2} + \frac{13w_0Lx}{24} - \frac{w_0L^2}{24}$$

Therefore, $$EI\frac{d^2y}{dx^2} = -\frac{w_0x^2}{2} + \frac{13w_0Lx}{24} - \frac{w_0L^2}{24}$$

Integrating we have, $$EI\frac{dy}{dx} = -\frac{w_0x^3}{6} + \frac{13w_0Lx^2}{48} - \frac{w_0L^2}{24}x + C_3 \qquad (iii)$$

Again integrating, $$EIy = -\frac{w_0x^4}{24} + \frac{13w_0Lx^3}{144} - \frac{w_0L^2x^2}{48} + C_3x + C_4 \qquad (iv)$$

Using boundary condition at $x = 0,\ y = 0$ in Equation (ii),

$$C_2 = 0$$

Using boundary condition at $x = L,\ y = 0$ in Equation (iv) we have,

$$0 = -\frac{w_0L^4}{24} + \frac{13w_0L^4}{144} - \frac{w_0L^4}{48} + C_3L + C_4$$

or, $$C_3L + C_4 = -\frac{w_0L^4}{36} \qquad (v)$$

Since the slope is same at $x = L/2$, by Equations (i) and (iii), therefore,

$$\frac{7w_0L^3}{192} - \frac{w_0L^3}{192} + C_1 = -\frac{w_0L^3}{48} + \frac{13w_0L^3}{192} - \frac{w_0L^3}{48} + C_3$$

or, $$C_1 - C_3 = \frac{w_0L^3}{192} \qquad (vi)$$

At $x = L/2$ the deflection is same by Equations (ii) and (iv), therefore,

$$\frac{7w_0L^4}{115L} - \frac{w_0L^4}{1920} + \frac{C_1L}{2} = -\frac{w_0L^4}{384} + \frac{13w_0L^4}{1152} - \frac{w_0L^4}{192} + \frac{C_3L}{2} + C_4$$

$$\text{or, } \frac{L}{2}(C_1 - C_3) - C_4 = \frac{w_0L^4}{480}$$

From Equations (vi) and (vii), we have

$$C_4 = -\frac{w_0L^4}{1920}$$

Substituting this value C_4 in Equation (v) and solving,

$$C_3 = -\frac{157w_0L^3}{5760}$$

Substituting this value of C_3 in Equation (vi),

$$C_1 = -\frac{187w_0L^3}{5760}$$

Substituting the values of C_1 and C_2 in Equation (ii), the equation of elastic c becomes,

For $0 < x < L/2$ $$Ely = \frac{7w_0Lx^3}{144} - \frac{w_0x^5}{60L} - \frac{187w_0L^3}{5760}x \quad \textit{Answer}$$

Substituting the values of constants C_3 and C_4 in Equation (iv), the equation of el curve becomes,

For $L/2 < x < L$ $$Ely = -\frac{w_0x^4}{24} + \frac{13w_0Lx^3}{144} - \frac{w_0L^2x^2}{48} - \frac{157w_0L^3x}{5760} - \frac{w_0L^4}{1920} \quad \textit{Answer}$$

Now substituting $x = L/2$ in Equation $(viii)$ the expression of deflection at the point becomes,

$$Ely_c = -\frac{123w_0L^4}{11520}$$

$$\text{or, } y_c = -\frac{123w_0L^4}{11520EI} \quad \textit{Answer}$$

Problem P5.26:

Using area moment method derive the expressions of maximum deflection and the slope of a cantilever beam of length L subjected to a concentrated load at its free en shown in Figure P5.26.

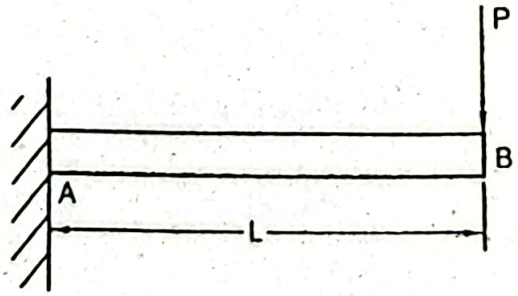

Figure P5.26

Given Data:

Length of beam $= L$

Concentrated load $= P$

To Find:

- Expression of maximum deflection, y_{max}
- Expression of end slope, θ

Solution:

Free body diagram of the entire beam, elastic curve of the beam in the deflected condition and the bending moment diagram are shown in the figures below.

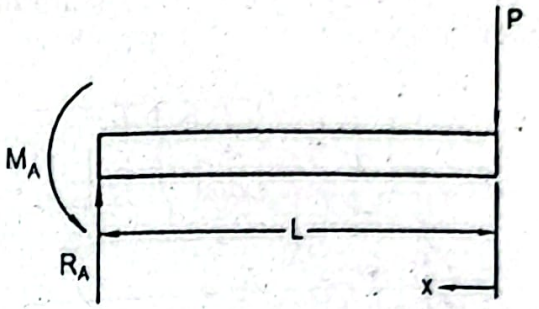

Free body diagram of entire beam

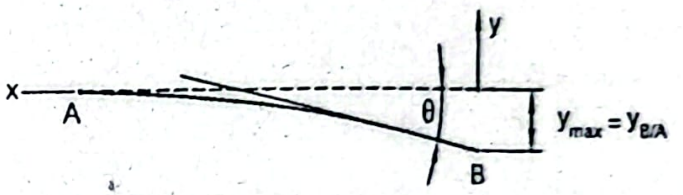

Elastic curve of deflected beam

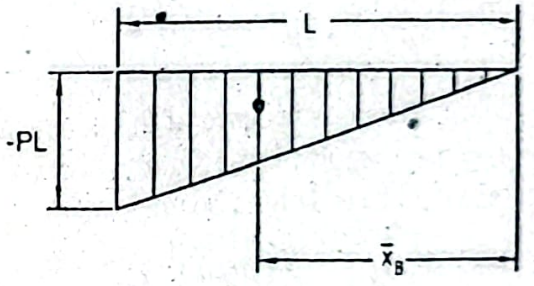

Bending moment diagram

Maximum deflection occurs at the free end of the beam.

We have an equation of deflection, $y_{B/A} = \frac{1}{EI}(area)_{BA}\,\bar{x}_B$

But we have, $(area)_{BA} = \frac{1}{2} \times (-PL)L = -\frac{PL^2}{2}$

and, $\bar{x}_B = \frac{2}{3}L$

Therefore, $y_{B/A} = y_{max} = \frac{1}{EI}\left(-\frac{PL^2}{2}\right) \times \frac{2}{3}L$

$= -\frac{PL^3}{3EI}$ *Answer*

Note: Negative sign indicates the final position of B is below the tangent drawn at A.

We have the equation of slope, $\theta_{AB} = \frac{1}{EI}(area)_{AB}$

or, $\theta = \frac{1}{EI}\left(-\frac{PL^2}{2}\right) = -\frac{PL^2}{2EI}$ *Answer*

Problem P5.27:

Using area moment method derive the expressions of maximum deflection and the slope of a cantilever beam of length L subjected to a uniformly distributed load w its entire length as shown in Figure P5.27.

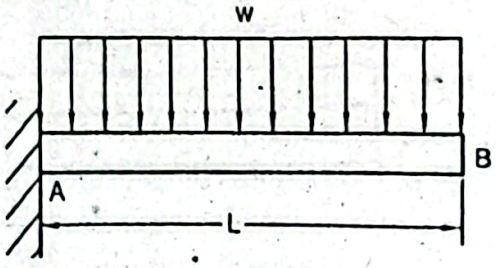

Figure P5.27

Given Data:

Length of beam $= L$

Uniformly distributed load $= w$

To Find:

- Expression of maximum deflection, y_{max}
- Expression of end slope, θ

Solution:

Free body diagram of the entire beam, elastic curve of the beam in the deflected condi and the bending moment diagram are shown in the figures below.

Maximum deflection occurs at the free end of the beam.

We have an equation of deflection, $y_{B/A} = \frac{1}{EI}(area)_{BA}\,\bar{x}_B$

Bending moment,

For $0 < x < L$ $\quad M_x = -\frac{wx^2}{2}$

We have, $\quad (area)_{BA} = \int M_x dx = -\int_0^L \frac{wx^2}{2} dx$

$$= -\left[\frac{w}{2}\frac{x^3}{3}\right]_0^L = -\frac{wL^3}{6}$$

We know, $\quad \int x dA = (area)_{BA}.\bar{x}_B$

But, $\quad \int x dA = \int_0^L x\left(-\frac{wx^2}{2}\right)dx = -\int_0^L \frac{wx^3}{2} dx$

$$= -\left[\frac{wx^4}{8}\right]_0^L = -\frac{wL^4}{8}$$

Therefore, $y_{max} = \frac{1}{EI}(area)_{BA}.\bar{x}_B = \frac{1}{EI}\left(-\frac{wL^3}{8}\right)$

$$= -\frac{wL^4}{8EI} \text{ Answer}$$

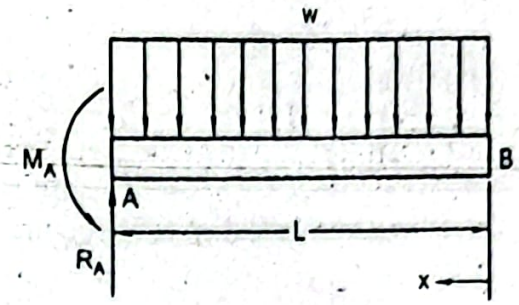

Free body diagram of entire beam

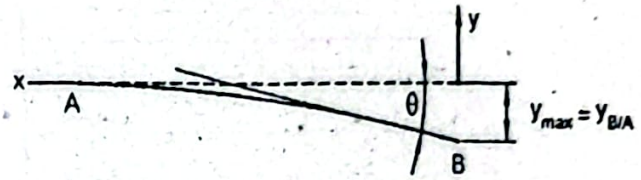

Elastic curve of deflected beam

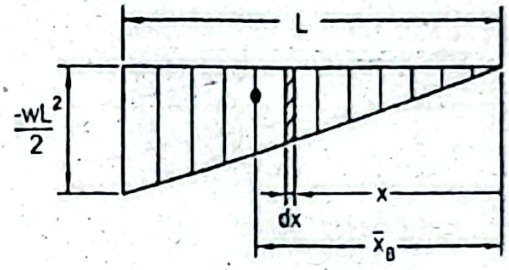

Bending moment diagram

lote: Negative sign indicates that the value is below the tangent drawn at A.

Ve have the equation for slope, $\theta_{AB} = \theta = \frac{1}{EI}(area)_{AB}$

$$= \frac{1}{EI}\left(-\frac{wL^3}{6}\right)$$

$$= -\frac{wL^3}{6EI} \text{ Answer}$$

roblem P5.28:

Using area moment method find an expression of maximum deflection of a cantilever eam of length L subjected to three equal concentrated loads P, one at the free end, one $L/3$ from the free end and one at $2L/3$ from the free end as shown in Figure P5.28.

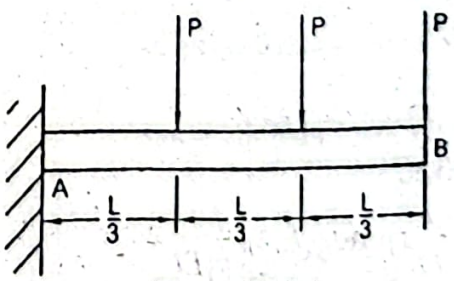

Figure P5.28

Given Data:

Length of beam $= L$

Equal concentrated load $= P$

To Find:

- Expression of maximum deflection, y_{max}

Solution:

Free body diagram of the entire beam, elastic curve of the beam in the deflected cond and the bending moment diagram by parts are shown in the figures below.

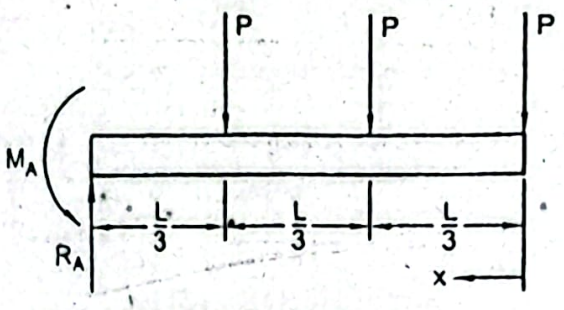

Free body diagram of entire beam

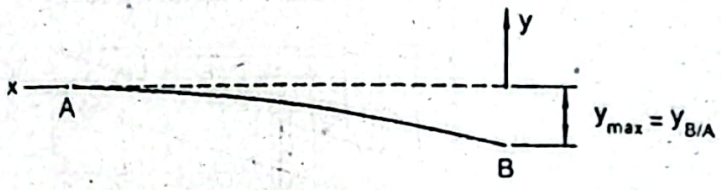

Elastic curve of deflected beam

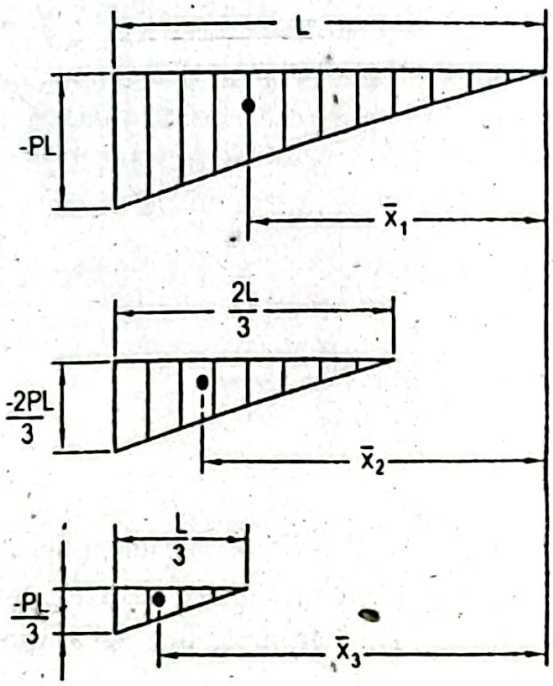

Bending moment diagram by parts

Maximum deflection occurs at the free end of the beam.

We have an equation of deflection,

$$y_{B/A} = \frac{1}{EI}(area)_{BA}\bar{x}_B = \frac{1}{EI}\Sigma Ax$$

$$\text{or, } y_{B/A} = \frac{1}{EI}\left[A_{m_1}\bar{x}_1 + A_{m_2}\bar{x}_2 + A_{m_3}\bar{x}_3\right]$$

$$= \frac{1}{EI}\left[\frac{1}{2}(-PL)L\times\frac{2}{3}L + \frac{1}{2}\left(-\frac{2}{3}PL\right)\times\frac{2}{3}L\times\left(\frac{L}{3}+\frac{2}{3}\times\frac{2L}{3}\right)\right]$$

$$+\frac{1}{2}\left(-\frac{PL}{3}\right)\times\frac{L}{3}\times\left(\frac{2L}{3}+\frac{2}{3}\frac{L}{3}\right)$$

$$= -\frac{1}{EI}\left[\frac{PL^3}{3}+\frac{14PL^3}{81}+\frac{4PL^3}{81}\right]$$

$$= -\frac{5PL^3}{9EI}$$

That is, $$y_{max} = -\frac{5PL^3}{9EI}$$ *Answer*

Problem P5.29:

Using area moment method find an expression of maximum deflection of a simply supported beam of length L subjected to two equal concentrated symmetric loads P as shown in Figure P5.29. Also determine the deflection at a distance of $L/3$ from either the right or the left support.

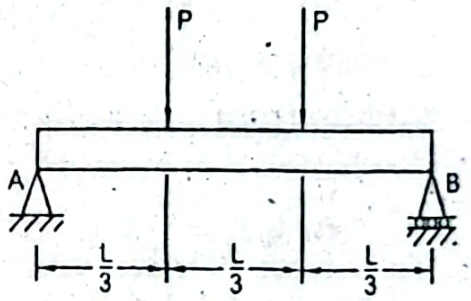

Figure P5.29

Given Data:

Length of beam $= L$

Equal concentrated load $= P$

To Find:

Expression of maximum deflection, y_{max}

Deflection at a distance of $L/3$ from either left or right support

Solution:

Free body diagram of the entire beam, elastic curve of the beam in the deflected condition and the bending moment diagram are shown in the figures below.

From static equilibrium condition,

$$+\uparrow \sum F_y = 0;$$

$$\text{or, } R_A + R_B - P - P = 0$$

$$\text{or, } R_A + R_B = 2P$$

For the symmetric loading,

$$R_A = R_B = P$$

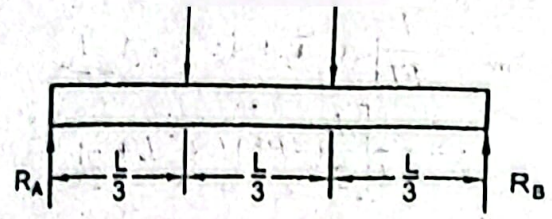

Free body diagram of entire beam

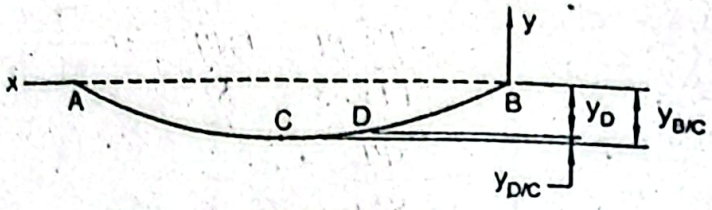

Elastic curve of deflected beam

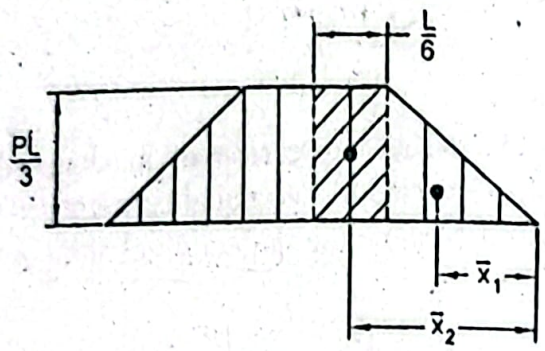

Bending moment diagram

Maximum deflection occurs at the mid point of the beam.
We have an equation of deflection,

$$y_{B/C} = \frac{1}{EI}(area)_{BC}\,\bar{x}_B = \frac{1}{EI}\sum Ax$$

$$\text{or, } y_{B/C} = \frac{1}{EI}\left[A_{m_1}\bar{x}_1 + A_{m_2}\bar{x}_2\right]$$

$$= \frac{1}{EI}\left[\frac{1}{2}\frac{PL}{3}\times\frac{L}{3}\left(\frac{2}{3}\frac{L}{3}\right)+\frac{PL}{3}\frac{L}{6}\left(\frac{L}{3}+\frac{L}{12}\right)\right]$$

$$= \frac{23PL^3}{648EI}$$

Note: Positive sign indicates that the value is above the tangent drawn at C.

Therefore, $$y_{max} = -y_{B/C} = \frac{23PL^3}{648EI}$$ *Answer*

We have, $$y_{D/C} = \frac{1}{EI}(area)_{DC}\,\bar{x}_D$$

$$= \frac{1}{EI}\left[\frac{PL}{3}\frac{L}{6}\frac{L}{12}\right] = \frac{PL^3}{216EI}$$

Therefore, the deflection at a distance of $L/3$ from the right support,

$$y_D = -[y_{B/C} - y_{D/C}] = -\left[\frac{23PL^3}{648EI} - \frac{PL^3}{216EI}\right] = -\frac{5}{162}\frac{PL^3}{EI}$$ *Answer*

Problem P5.30:

Using area moment method derive an expression for the end deflection of a cantilever beam carrying a triangular distribution of load with maximum value of w_0 at the fixed end as shown in Figure P5.30.

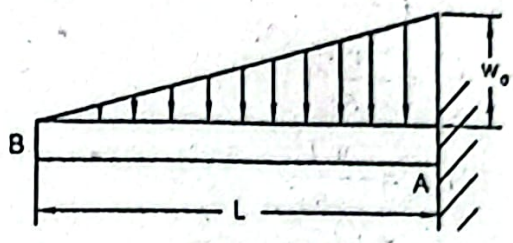

Figure P5.30

Given Data:

Length of beam $= L$

Load = Triangular distribution with maximum value of w_0

To Find:

End deflection, y_{max}

Solution:

Free body diagram of the entire beam, elastic curve of the beam in the deflected condition and the bending moment diagram are shown in the figures below.

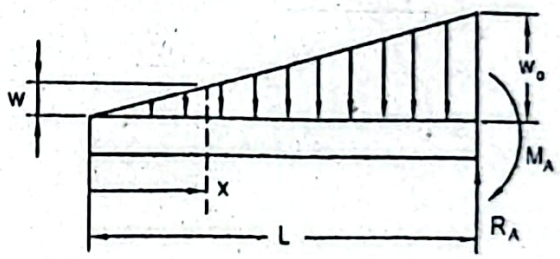

Free body diagram of entire beam

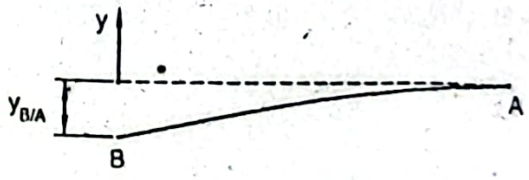

Elastic curve of deflected beam

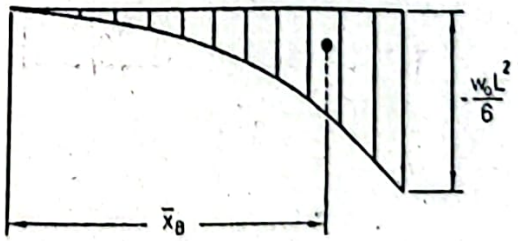

Bending moment diagram

For $0 < x < L$ $\quad M_x = -\frac{1}{2} wx \frac{x}{3} = -\frac{\quad}{6}$

We have from the similar triangles,

$$\frac{w}{x} = \frac{w_0}{L}$$

$$\text{or, } w = \frac{x}{L} w_0$$

Substituting the value of w, $M_x = -\frac{w_0 x^3}{6L}$

At $x = L$, $\quad M_{max} = -\frac{w_0 L^2}{6}$

We have, $\quad y_{B/A} = \frac{1}{EI} (area)_{BA} \bar{x}_B$

$$(area)_{BA} \bar{x}_B = \int x dA$$

But, $\quad \int_0^L x dA = \int_0^L x M_x dx = -\int_0^L x \left(-\frac{w_0 x^3}{6L} \right) dx$

$$= -\frac{w_0}{6L} \left[\frac{x^5}{5} \right]_0^L = -\frac{w_0 L^4}{30}$$

Therefore, $\quad y_{B/A} = \frac{1}{EI} (area)_{BA} \bar{x}_B$

$$= \frac{1}{EI} \left(-\frac{w_0 L^4}{30} \right) = -\frac{w_0 L^4}{30EI}$$

That is, the end deflection, $y_{max} = -\frac{w_0 L^4}{30EI}$ *Answer*

Problem P5.31:

Using area moment method find an expression of the end deflection of an overhang beam carrying two equal concentrated loads P at the free ends as shown in Figure P5.

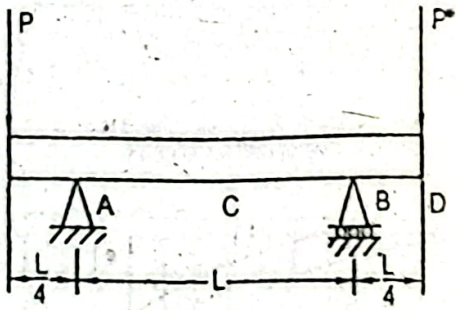

Figure P5.31

Given Data:

Length of beam $= \frac{3}{2} L$

Concentrated load $= P$

To Find:

- Expression of end deflection, y_P

Solution:

Free body diagram of the entire beam, elastic curve of the beam in the deflected condition and the bending moment diagram are shown in the figures below.

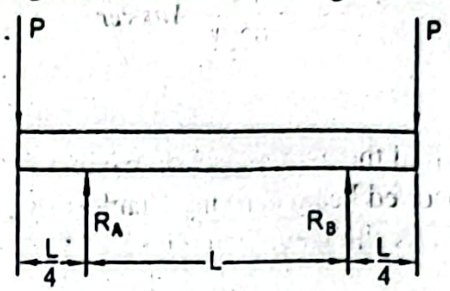

Free body diagram of entire beam

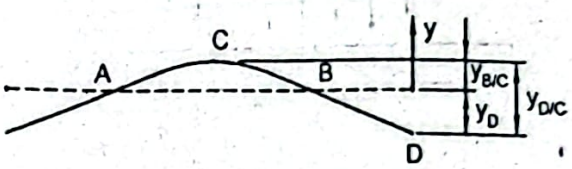

Elastic curve of deflected beam

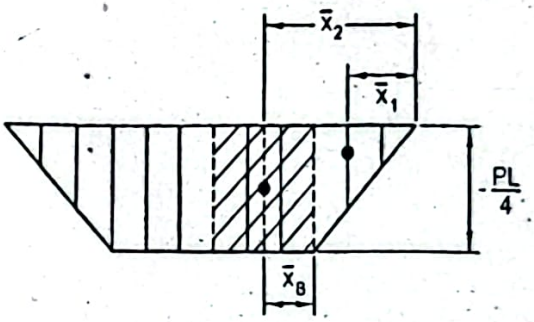

Bending moment diagram

static equilibrium condition, for the symmetric loading,

$$R_A = R_B = P$$

e have,

$$y_{B/C} = \frac{1}{EI}(area)_{BC}.\bar{x}_B$$

$$= \frac{1}{EI}\left[\left(-\frac{PL}{4}\right)\frac{L}{2}\frac{L}{4}\right] = -\frac{PL^3}{32EI}$$

also have,

$$y_{D/C} = \frac{1}{EI}(area)_{DC}.\bar{x}_D = \frac{1}{EI}\sum Ax$$

$$= \frac{1}{EI}\left[A_{m_1}\bar{x}_1 + A_{m_2}\bar{x}_2\right]$$

$$= \frac{1}{EI}\left[\frac{1}{2}\left(-\frac{PL}{4}\right)\frac{L}{4}\frac{2}{3}\frac{L}{4}\right] + \left(-\frac{PL}{4}\right)\frac{L}{2}\left(\frac{L}{4}+\frac{L}{4}\right)$$

Therefore, the end deflection, $y_D = y_{D/C} - y_{B/C}$

$$= -\frac{13PL^3}{192EI} + \frac{PL^3}{32EI}$$

$$= -\frac{7PL^3}{192EI} \quad \textit{Answer}$$

Problem P5.32:

Using area moment method find the expressions of maximum deflection and the slop the support for a simply supported beam carrying a uniformly distributed load of w half of its length at the middle as shown in Figure P5.32.

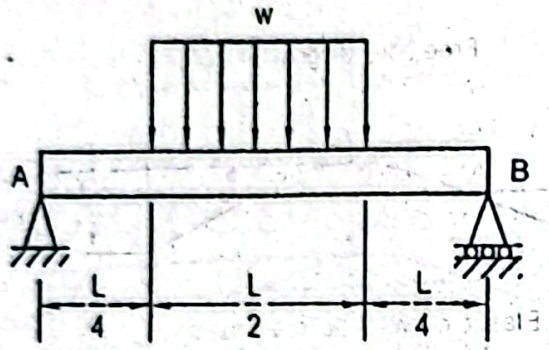

Figure P5.32

Given Data:

Length of beam = L

Uniformly distributed load = w

To Find:

- Expression of maximum deflection, y_{max}
- Slope at support, θ_A

Solution:

Free body diagram of the entire beam, elastic curve of the beam in the deflected conditio and the bending moment diagram are shown in the figures below.

In static equilibrium condition,

$$+\uparrow \sum F_y = 0;$$

$$\text{or, } R_A + R_B - \frac{wL}{2} = 0$$

$$\text{or, } R_A + R_B = \frac{wL}{2}$$

For the symmetric loading, $R_A = R_B = \frac{wL}{4}$

Bending moment for the reaction only,

$$M_x = R_A x = \frac{wL}{4} x$$

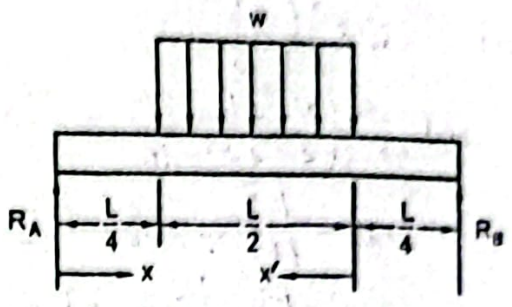

Free body diagram of entire beam

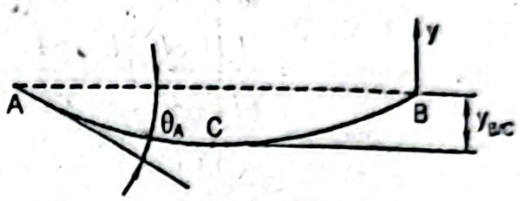

Elastic curve of deflected beam

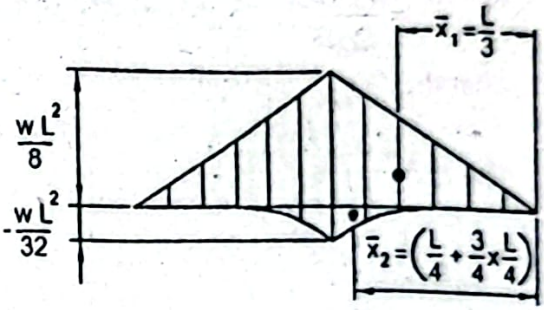

Bending moment diagram

Now at $x = \frac{L}{2}$, $\quad M_{x=L/2} = \frac{wL^2}{8}$

Bending moment for the distributed load,

$$M_x = -\frac{w}{2}\left(x - \frac{L}{4}\right)^2$$

At $x = \frac{L}{2}$, $\quad M_{x=L/2} = -\frac{w}{2}\left(\frac{L}{2} - \frac{L}{4}\right)^2$

$$= -\frac{wL^2}{32}$$

Maximum deflection occurs at the mid point of the beam.

To find the moment areas, $\quad A_{m_1} = \frac{1}{2}\frac{wL^2}{8}\frac{L}{2} = \frac{wL^3}{32}$

We have, $\quad M_{x'} = -\frac{wx'^2}{2}$

Therefore, $\quad A_{m_2} = \int Mx'dx' = -\frac{w}{2}\left[\frac{x'^3}{3}\right]_0^{L/4}$

$$= -\frac{w}{6}\frac{L^3}{64} = -\frac{wL^3}{384}$$

Location of the

$$\text{and, } \bar{x}_2 = \left(\frac{L}{4} + \frac{3}{4}\frac{L}{4}\right) = \frac{7L}{16}$$

We have, $$y_{B/C} = \frac{1}{EI}(area)_{BC}\,\bar{x}_B = \frac{1}{EI}\sum Ax$$

$$\text{or, } y_{B/C} = \frac{1}{EI}\left[A_{m_1}\bar{x}_1 + A_{m_2}\bar{x}_2\right]$$

$$= \frac{1}{EI}\left[\left(\frac{wL^3}{32}\right)\frac{L}{3} - \frac{wL^3}{384}\frac{7L}{16}\right]$$

$$= \frac{1}{EI}\left[\frac{wL^4}{96} - \frac{7wL^4}{6144}\right]$$

$$= \frac{19wL^4}{2048}$$

Note: Positive sign indicates that the value is above the tangent drawn at C.

Therefore, $$y_{max} = -\frac{19wL^4}{2048}$$ *Answer*

Slope at the support A, $$\theta_{AC} = \frac{(area)_{AC}}{EI}$$

$$= \frac{A_{m_1} + A_{m_2}}{EI}$$

$$= \frac{1}{EI}\left[\frac{wL^3}{32} - \frac{wL^3}{384}\right]$$

$$= \frac{wL^3}{384EI}$$

That is, the slope at support A, $\theta_A = -\frac{wL^3}{384EI}$ *Answer*

Problem P5.33:

A cantilever beam of length L is subjected to a concentrated load of P and a couple M_0 at its free end as shown in Figure P5.33. Using area moment method, find the expressions of maximum deflection and the end slope.

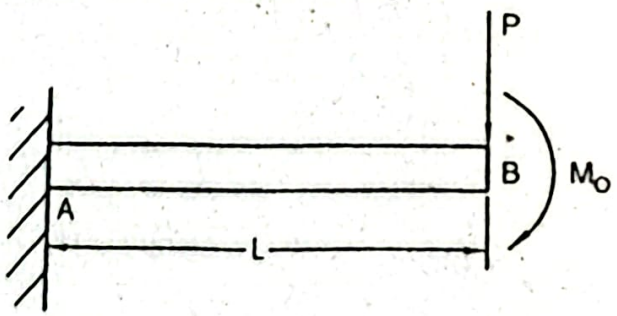

Figure P5.33

Given Data:

Length of beam = L

Concentrated load = P

Couple = M_o

To Find:

- Expression of maximum deflection, y_{max}
- End slope, θ_B

Solution:

Free body diagram of the entire beam, elastic curve of the beam in the deflected condition and the bending moment diagram by parts are shown in the figures below.

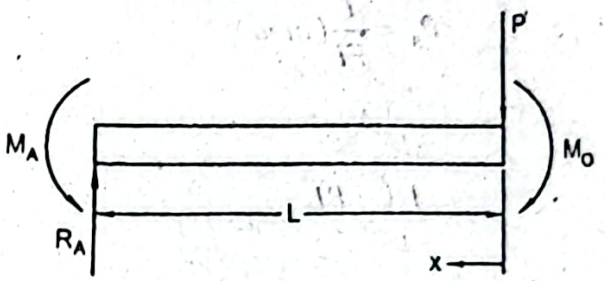

Free body diagram of entire beam

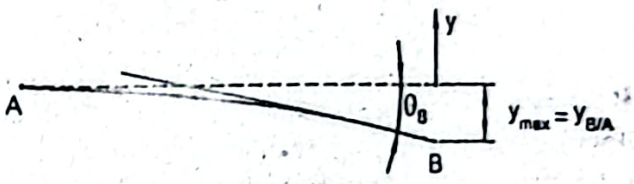

Elastic curve of deflected beam

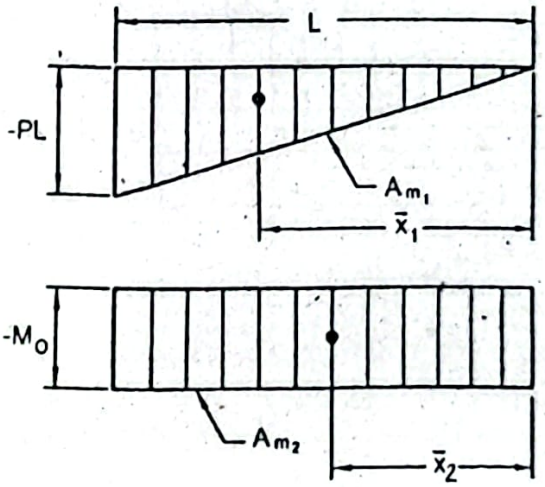

Bending moment diagram by parts

Maximum deflection occurs at the free end of the beam.

We have an equation of deflection,

$$y_{B/A} = \frac{1}{EI}(area)_{BA}\,\bar{x}_B = \frac{1}{EI}\sum Ax$$

$$= \frac{1}{EI}\left[A_{m_1}\bar{x}_1 + A_{m_2}\bar{x}_2\right]$$

We have the moment

$$\text{and, } A_{m_2} = -M_0 L$$

Location of the centroid, $\bar{x}_1 = \frac{2}{3}L$ and $\bar{x}_2 = \frac{L}{2}$

Substituting these values, $y_{B/A} = \frac{1}{EI}\left[-\frac{PL^2}{2}\frac{2L}{3} - M_0 L\frac{L}{2}\right]$

$$\text{or, } y_{max} = -\frac{1}{EI}\left(\frac{PL^3}{3} + \frac{M_0 L^2}{2}\right) \textit{Answer}$$

We have for the end slope, $\theta_{AB} = \theta_B = \frac{1}{EI}(area)_{AB}$

$$= \frac{1}{EI}\left(A_{m_1} + A_{m_2}\right)$$

$$= \frac{1}{EI}\left(-\frac{PL^2}{2} - M_0 L\right)$$

$$= -\frac{1}{EI}\left(\frac{PL^2}{2} + M_0 L\right) \textit{Answer}$$

Problem P5.34:

Using area moment method find an expression of maximum deflection of a cantile beam of length L subjected to a uniformly distributed load of w over half of its len from the free end as shown in Figure P5.34.

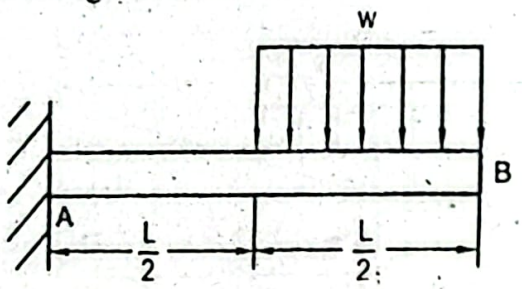

Figure P5.34

Given Data:

Length of beam = L

Uniformly distributed load = w

To Find:

- Maximum deflection, y_{max}

Solution:

Free body diagram of the entire beam, elastic curve of the beam in the deflected condition and the bending moment diagram are shown in the figures below.

Bending moment,

For $0 < x < L/2$ $\qquad M_x = -\frac{wx^2}{2}$

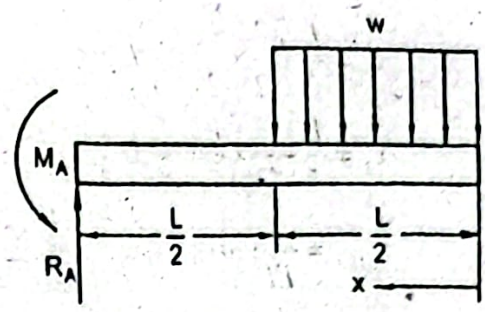

Free body diagram of entire beam

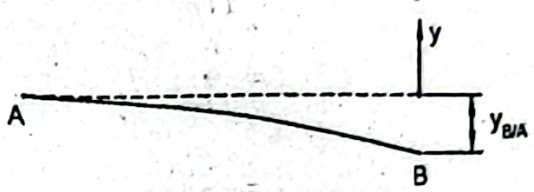

Elastic curve of deflected beam

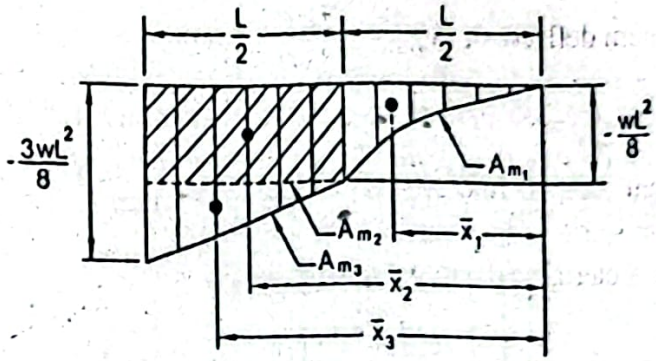

Bending moment diagram

At $x = \frac{L}{2}$, $\quad M_{x=L/2} = -\frac{wL^2}{8}$

Bending moment,

For $L/2 < x < L$ $\quad M_x = -\frac{wL}{2}\left(x - \frac{L}{4}\right)$

At $x = L$, $\quad M_{x=L} = -\frac{wL}{2}\left(L - \frac{L}{4}\right) = -\frac{3wL^2}{8}$

Maximum deflection occurs at the free end of the beam.

To find the moment areas, $\quad A_{m_1} = \int_0^{L/2} M_x dx = -\frac{w}{2}\int_0^{L/2} x^2 dx = -\left[\frac{wx^3}{6}\right]_0^{L/2} = -\frac{wL^3}{48}$

$$A_{m_2} = -\frac{wL^2}{8} \times \frac{L}{2} = -\frac{wL^3}{16}$$

$$A_{m_3} = -\frac{1}{2} \times \left(\frac{3wL^2}{8} - \frac{wL^2}{8}\right) \times \frac{L}{2} = -\frac{wL^3}{16}$$

Location of the centroid, $\quad \bar{x}_1 = \frac{3}{4}\left(\frac{L}{2}\right) = \frac{3}{8}L$

$$\bar{x}_2 = \frac{L}{2} + \frac{1}{2} \times \frac{L}{2} = \frac{3}{4} L$$

$$\bar{x}_3 = \frac{L}{2} + \frac{2}{3} \times \frac{L}{2} = \frac{5}{6} L$$

We have,
$$y_{B/A} = \frac{1}{EI} (area)_{BA} \bar{x}_B = \frac{1}{EI} \sum Ax$$

$$= \frac{1}{EI} \left[A_{m_1} \bar{x}_1 + A_{m_2} \bar{x}_2 + A_{m_3} \bar{x}_3 \right]$$

$$= \frac{1}{EI} \left[-\frac{wL^3}{48} \times \frac{3L}{8} - \frac{wL^3}{16} \times \frac{3L}{4} - \frac{wL^3}{16} \times \frac{5L}{6} \right]$$

$$= -\frac{41wL^4}{384EI}$$

That is, the maximum deflection, $y_{max} = -\frac{41wL^4}{384EI}$ *Answer*

Problem P5.35:

Using area moment method find an expression of maximum deflection of a cantilever beam carrying a uniformly distributed load of w from its supporting end as shown in Figure P5.35. Also determine the maximum deflection when $a = L/2$.

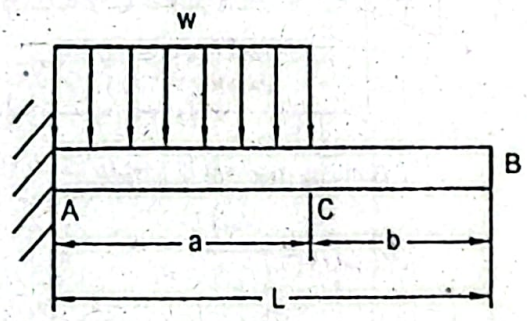

Figure P5.35

Given Data:

Length of beam $= (a+b)$

Uniformly distributed load $= w$

To Find:

- Maximum deflection, y_{max}
- Maximum deflection, y_{max} when $a = L/2$

Solution:

Free body diagram of the entire beam, elastic curve of the beam in the deflected condition and the bending moment diagram are shown in the figures below.

Bending moment, $M_x = -\frac{wx^2}{2}$

At $x = a$, $M_{x=a} = -\frac{wa^2}{8}$

We have, $$y_{C/A} = \frac{1}{EI}(area)_{CA}\,\bar{x}_C$$

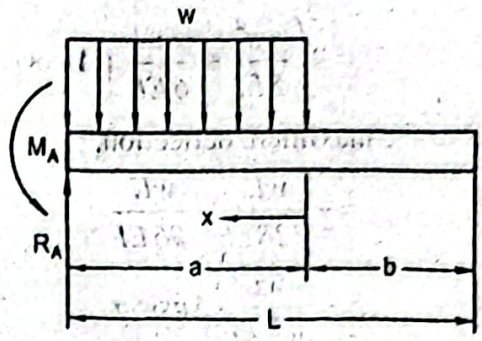

Free body diagram of entire beam

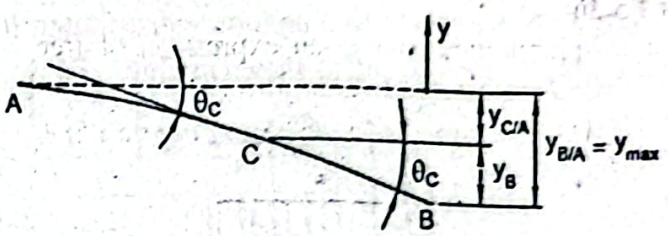

Elastic curve of deflected beam

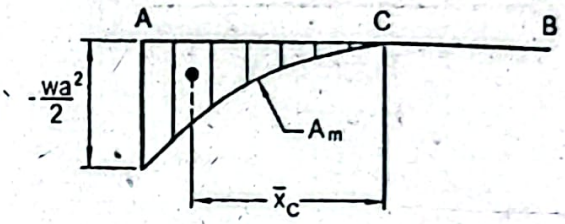

Bending moment diagram

But we know, $$(area)_{CA} = \int_0^a M_x\,dx = -\int_0^a \frac{wx^2}{2}dx = -\frac{w}{2}\int_0^a x^2\,dx$$

$$= -\frac{w}{2}\left[\frac{x^3}{3}\right]_0^a = -\frac{wa^3}{6}$$

Maximum deflection occurs at the free end of the beam.

Location of the centroid, $$\bar{x}_C = \frac{3}{4}a$$

Therefore, $$y_{C/A} = \frac{1}{EI}\left[-\frac{wa^3}{6}\times\frac{3}{4}a\right] = -\frac{wa^4}{8EI}$$

We also have for the slope, $$\theta_C = \theta_{AC} = \frac{1}{EI}(area)_{AC} = \frac{1}{EI}\left[-\frac{wa^3}{6}\right]$$

$$= -\frac{wa^3}{6EI}$$

We know, $$y_B = \theta_C \times b = -\frac{wa^3 b}{6EI}$$

Therefore, $$y_{B/A} = y_{max} = y_{C/A} + y_B = -\frac{wa^4}{8EI} - \frac{wa^3 b}{6EI}$$

$$= -\left(\frac{wa^4}{8EI} + \frac{wa^3 b}{6EI}\right) \text{ Answer}$$

When $a = L/2$ and $b = L/2$ the maximum deflection,

$$y_{max} = -\frac{wL^4}{128EI} - \frac{wL^4}{96EI}$$

$$= -\frac{7wL^4}{384EI} \text{ Answer}$$

Problem P5.36:

Using area moment method find an expression of free end deflection for a canti beam of length L subjected to a uniformly distributed load of w over half of its le and a couple M_0 at its free end as shown in Figure P5.36.

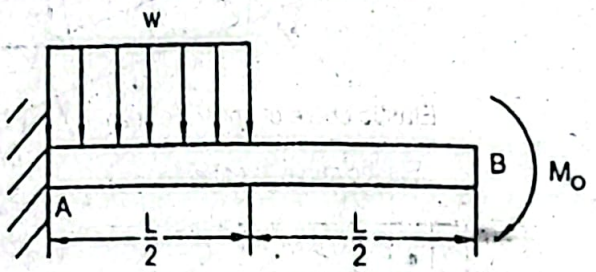

Figure P5.36

Given Data:

Length of beam $= L$

Uniformly distributed load $= w$

Couple $= M_0$

To Find:

- Expression of free end deflection, y_B

Solution:

Free body diagram of the entire beam, elastic curve of the beam in the deflected conditi and the bending moment diagram by parts are shown in the figures below.

Bending moment,

For $0 < x < L/2$ $$M_x = -\frac{wx^2}{2}$$

Moment areas, $$A_{m_1} = \int_0^{L/2} M_x dx = -\frac{w}{2}\int_0^{L/2} x^2 dx = -\frac{w}{2}\left[\frac{x^3}{3}\right]_0^{L/2}$$

or, $$A_{m_1} = -\frac{wL^3}{48}$$

and, $$A_{m_2} = -M_0 \times L$$

Deflection, $$y_{B/A} = \frac{1}{EI}(area)_{BA}\,\bar{x}_B$$

$$= \frac{1}{EI}\left[A_{m_1}\bar{x}_1 + A_{m_2}\bar{x}_2\right]$$

$$= \frac{1}{EI}\left[-\frac{w_0 L^3}{48} \times \left(\frac{L}{2} + \frac{3}{4}\frac{L}{2}\right) - M_0 \times L \times \frac{L}{2}\right]$$

$$= -\frac{7wL^4}{384EI} - \frac{M_0 L^2}{2EI}$$

That is, the expression of the free end deflection,

$$y_B = -\frac{7wL^4}{384EI} - \frac{M_0 L^2}{2EI} \quad \textit{Answer}$$

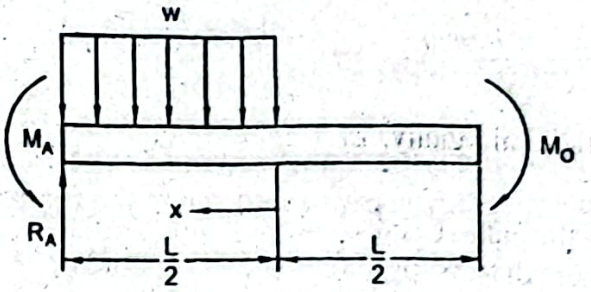

Free body diagram of entire beam

Elastic curve of deflected beam

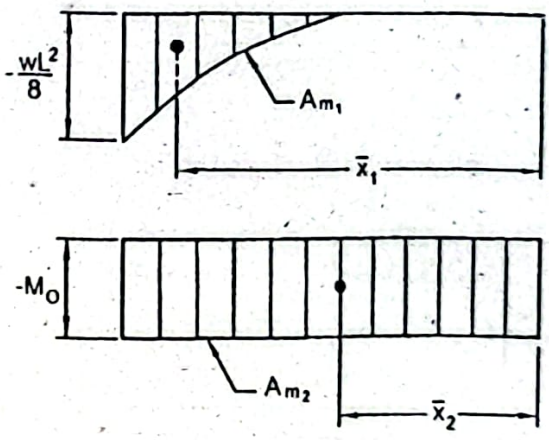

Bending moment diagram by parts

Problem P5.37:

A cantilever beam of length $4m$ carries a triangular distribution of load with maximum value $w_0 = 10kN/m$ and a concentrated load $P = 5kN$ at its free end as shown in Figure P5.37. Using area moment method, determine the minimum value of flexural rigidity if the maximum deflection is not to exceed $1.5mm$.

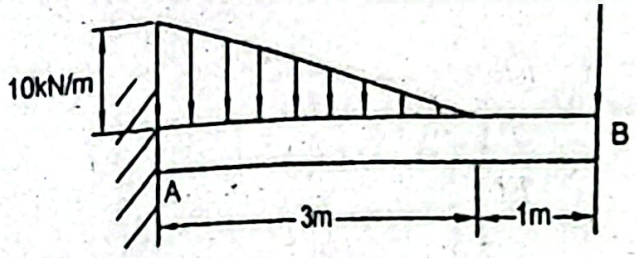

Figure P5.37

Given Data:

Length of beam $L = 4m$

Load = Triangular distribution with maximum value of $w_0 = 10kN/m$

Concentrated load, $P = 5kN$

Limiting deflection, $y_{max} = 1.5mm$

To Find:

- Minimum value of flexural rigidity, EI

Solution:

Free body diagram of the entire beam, elastic curve of the beam in the deflected condition and the bending moment diagram by parts are shown in the figures below.

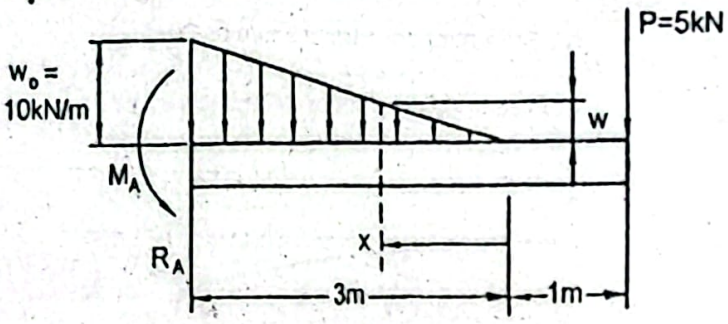

Free body diagram of entire beam

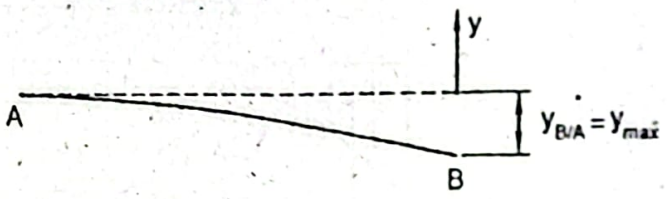

Elastic curve of deflected beam

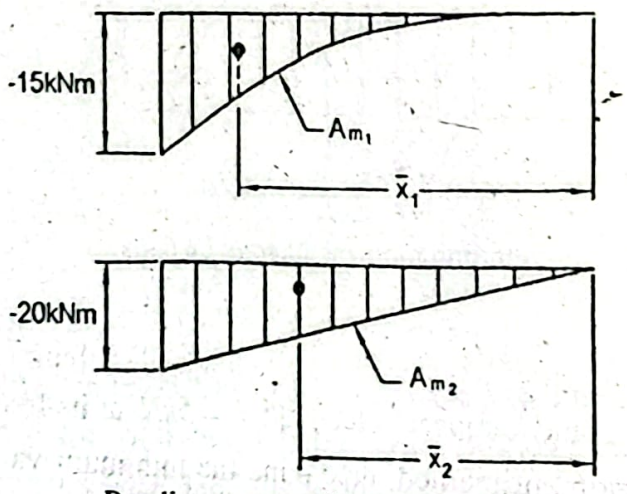

Bending moment diagram by parts

To find the moment areas, $M_x = -\frac{1}{2} wx \frac{x}{3} = -\frac{wx^2}{6}$

From similar the triangles, $\frac{w}{x} = \frac{w_0}{3}$

or, $w = \frac{w_0}{3} x = \frac{10 \times 10^3}{3} x = 3333.33x \ \frac{N}{m}$

Therefore, $M_x = -\frac{3333.33x^3}{6} = -555.56x^3 \ Nm$

$$A_{m_1} = \int_0^3 M_x dx = -555.56 \int_0^3 x^3 dx = -\left[555.56 \times \frac{x^4}{4}\right]_0^3$$

$$= -11.25 \times 10^3 \ Nm^2$$

$$A_{m_2} = -\frac{1}{2} \times 20 \times 10^3 \times 4 \ Nm^2 = -40 \times 10^3 \ Nm^2$$

Deflection, $y_{B/A} = \frac{1}{EI} (area)_{BA} \bar{x}_B$

or, $y_{max} = \frac{1}{EI}\left[A_{m_1} \bar{x}_1 + A_{m_2} \bar{x}_2\right]$

or, $-1.5 = \frac{10^3}{EI}\left[-11.25 \times 10^3 \times \left(1 + \frac{4}{5} \times 3\right) - 40 \times 10^3 \times \frac{2}{3} \times 4\right]$

or, $EI = 96.61 \times 10^6 \ Nm^2$

That is, the minimum value of flexural rigidity, $EI = 96.61 \times 10^6 \ Nm^2$ ***Answer***

Problem P5.38:

A cantilever beam of length $4m$ is subjected to a triangular distribution of load with maximum value $w_0 = 20kN/m$ and an end couple $M_0 = 5kNm$ as shown in Figure P5.38. Using area moment method, determine the deflection at the free end. Consider flexural rigidity $EI = 50 \times 10^6 \ Nm^2$.

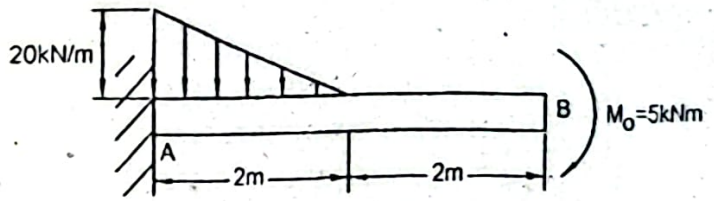

Figure P5.38

Given Data:

Length of beam, $L = 4m$

Load = Triangular distribution with maximum value $w_0 = 20kN/m$

Couple, $M_0 = 5kNm$

Flexural rigidity, $EI = 50 \times 10^6 \ Nm^2$

To Find:

Deflection at free end, y_B

Free body diagram of the entire beam, elastic curve ... the deflected condition and the bending moment diagram by parts are shown in the figures below.

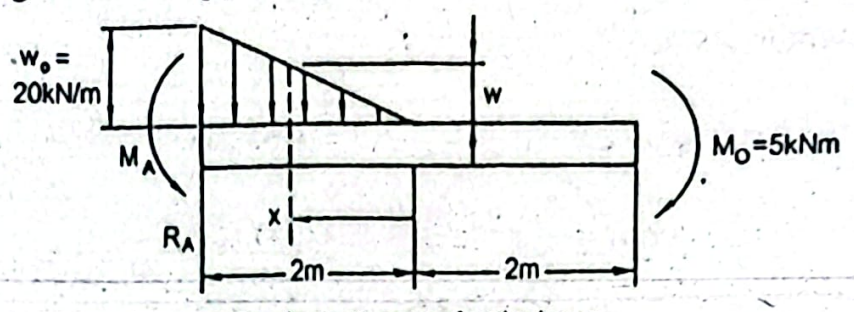

Free body diagram of entire beam

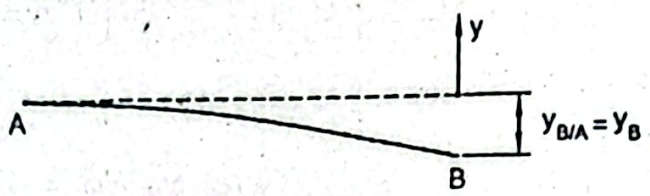

Elastic curve of deflected beam

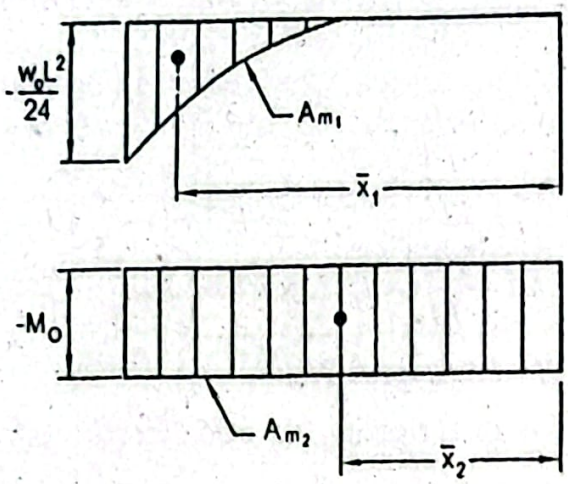

Bending moment diagram by parts

Moment area, $A_{m_1} = \int_0^{L/2} M_x dx$

Bending moment,

For $0 < x < L/2$ $\quad M_x = -\dfrac{wx^2}{6}$

From the similar triangles, $\dfrac{w}{x} = \dfrac{w_0}{L/2}$

or, $w = \dfrac{2w_0 x}{L}$

Therefore, $\quad M_x = -\dfrac{w_0 x^3}{3L}$

Now the moment areas, $\quad A_{m_1} = -\int_0^{L/2} \dfrac{w_0 x^3}{3L} dx = -\dfrac{w_0}{3L}\left[\dfrac{x^4}{4}\right]_0^{L/2}$

$$= -\frac{w_0 L^3}{192}$$

$$A_{m_2} = -M_0 L$$

Deflection,

$$y_{B/A} = \frac{1}{EI}(area)_{BA}\bar{x}_B$$

$$= \frac{1}{EI}\left[A_{m_1}\bar{x}_1 + A_{m_2}\bar{x}_2\right]$$

$$= \frac{1}{EI}\left[-\frac{w_0 L^3}{192}\left(\frac{L}{2}+\frac{4}{5}\times\frac{L}{2}\right) - M_0 \times L \times \frac{L}{2}\right]$$

$$= -\frac{9w_0 L^4}{1920EI} - \frac{M_0 L^2}{2EI}$$

Now substituting the values we obtain the required deflection at the free end of the beam,

$$y_B = y_{B/A} = -\left[\frac{9\times20\times10^3\times4^4}{1920\times50\times10^6} + \frac{5\times10^3\times4^2}{2\times50\times10^6}\right]\times10^3$$

$$= -1.28mm \text{ Answer}$$

Problem P5.39:

An overhanging beam carries uniformly distributed loads of w from its free end to the nearest support at its both ends as shown in Figure P5.39. Using area moment method, find the expressions of deflection and the slope at its end.

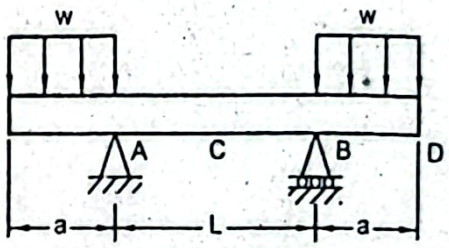

Figure P5.39

Given Data:

Uniformly distributed load = w

To Find:

- Expression of deflection, y_D
- Expression of slope at end, θ_D

Solution:

Free body diagram of the entire beam, elastic curve of the beam in the deflected condition and the bending moment diagram are shown in the figures below.

In static equilibrium condition,

$$+\uparrow \sum F_y = 0$$

$$\text{or, } R_A + R_B - wa - wa = 0$$

$$\text{or, } R_A + R_B = 2wa$$

For the symmetric loading, $R_A = R_B = wa$

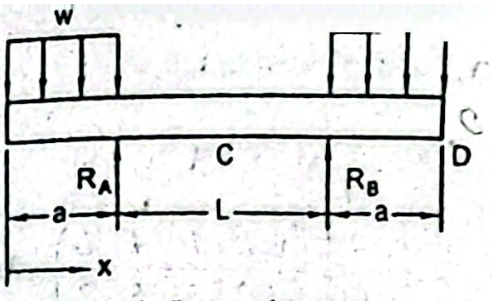

Free body diagram of entire beam

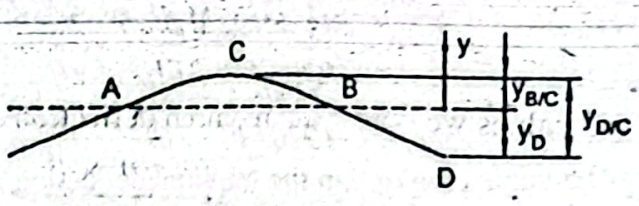

Elastic curve of deflected beam

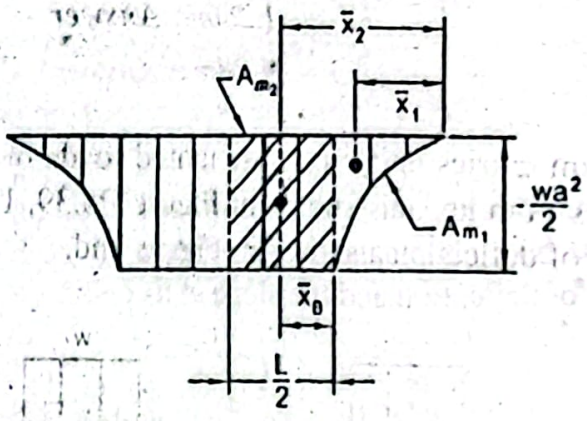

Bending moment diagram

Bending moment,

For $0 < x < a$ $\quad M_x = -\dfrac{wx^2}{2}$

At $x = a$, $\quad M_{x=a} = -\dfrac{wa^2}{2}$

Moment areas, $\quad A_{m_1} = -\int M_x dx = -\int_0^a \dfrac{wx^2}{2} = -\dfrac{w}{2}\left[\dfrac{x^3}{3}\right]_0^a = -\dfrac{wa^3}{6}$

and, $A_{m_2} = -\dfrac{wa^2}{2} \times \dfrac{L}{2} = -\dfrac{wa^2 L}{4}$

Location of the centroid, $\quad \bar{x}_1 = \dfrac{3}{4}a$ and $\bar{x}_2 = \left(a \pm \dfrac{L}{4}\right)$

Deflection, $\quad y_{D/C} = \dfrac{1}{EI}(area)_{DC}\,\bar{x}_D = \dfrac{1}{EI}\sum Ax$

$$= \frac{1}{EI}\left[A_{m_1}\bar{x}_1 + A_{m_2}\bar{x}_2\right]$$

$$= \frac{1}{EI}\left[\left(-\frac{wa^3}{6}\right)\frac{3}{4}a + \left(-\frac{wa^2 L}{4}\right)\left(a + \frac{L}{4}\right)\right]$$

$$y_{D/C} = -\frac{1}{EI}\left[\frac{wa^4}{8} + \frac{wa^3L}{4} + \frac{wa^2L^2}{16}\right]$$

Also deflection,

$$y_{B/C} = \frac{1}{EI}(area)_{BC}\,\bar{x}_B = \frac{1}{EI}\sum Ax$$

$$= \frac{1}{EI}\left[A_{m_2}\bar{x}_B\right]$$

$$= \frac{1}{EI}\left[-\frac{wa^2L}{4}\frac{L}{4}\right] \quad (\text{Here } \bar{x}_B = \frac{L}{4})$$

$$= -\frac{wa^2L^2}{16EI}$$

Therefore, the expression of the required deflection,

$$y_D = y_{D/C} - y_{B/C}$$

$$= -\frac{1}{EI}\left[\frac{wa^4}{8} + \frac{wa^3L}{4} + \frac{wa^2L^2}{16}\right] + \frac{wa^2L^2}{16EI}$$

$$= -\frac{1}{EI}\left[\frac{wa^4}{8} + \frac{wa^3L}{4}\right] = -\frac{wa^3}{8EI}(a+2L)$$ *Answer*

xpression of the slope at the end of the beam D,

$$\theta_D = \theta_{DC} = \frac{1}{EI}(area)_{DC}$$

$$= \frac{1}{EI}\left[A_{m_1} + A_{m_2}\right]$$

$$= \frac{1}{EI}\left[-\frac{wa^3}{6} - \frac{wa^2L}{4}\right] = -\frac{wa^2}{12EI}(2a+3L)$$ *Answer*

roblem P5.40:

simply supported beam carries uniformly distributed loads of w symmetrically from s ends as shown in Figure P5.40. Using area moment method, find an expression of laximum deflection.

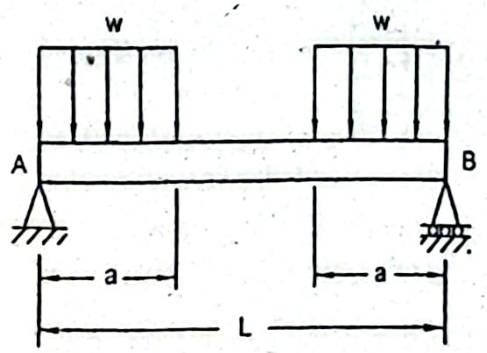

Figure P5.40

iven Data:

ength of beam $= L$

niformly distributed load $= w$

To Find:

- Expression of maximum deflection, y_{max}

Solution:

Free body diagram of the entire beam, elastic curve of the beam in the deflected c and the bending moment diagram are shown in the figures below.

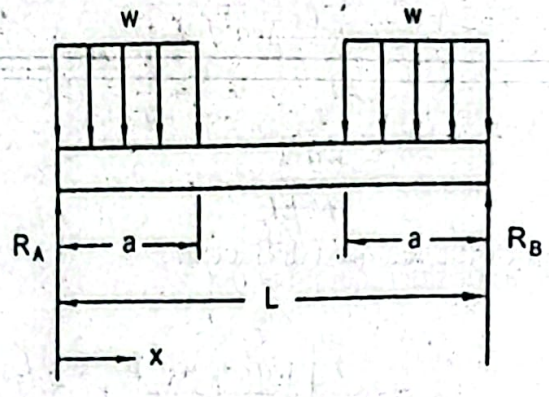

Free body diagram of entire beam

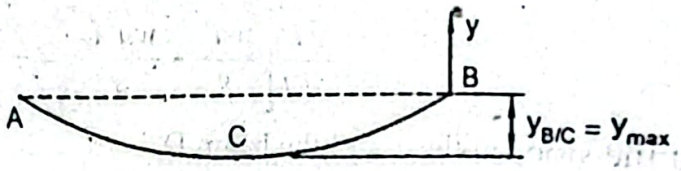

Elastic curve of deflected beam

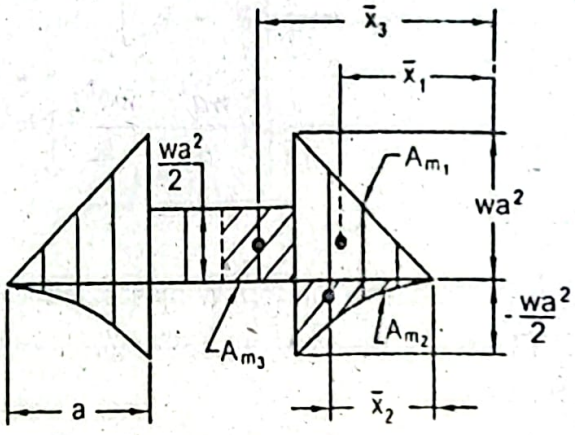

Bending moment diagram

For the symmetric loading, $R_A = R_B = wa$

Bending moment, $M_x = R_A x = wax$

Considering the reaction R_A only the bending moment,

At $x = a$, $M_{x=a} = wa^2$

Considering the distributed load only the bending moment,

For $0 < x < a$, $M_x = -\frac{wx^2}{2}$

At $x = a$, $M_{x=a} = -\frac{wa^2}{2}$

Bending moment,

For $a < x < (L-a)$ $\quad M_x = R_A x - wa\left(x - \frac{a}{2}\right)$

$$= wax - wax + \frac{wa^2}{2} = \frac{wa^2}{2}$$

Maximum deflection occurs at the mid point of the beam for the loading shown.

To find the moment areas, $A_{m_1} = \frac{1}{2} wa^2 a = \frac{wa^3}{2}$

$$A_{m_2} = -\int \frac{wx^2}{2} dx = -\left[\frac{wx^3}{6}\right]_a^a = -\frac{wa^3}{6}$$

$$A_{m_3} = \frac{wa^2}{2} \times \left(\frac{L}{2} - a\right) = \left(\frac{wa^2 L}{4} - \frac{wa^3}{2}\right)$$

Location of the centroid, $\bar{x}_1 = \frac{2}{3}a$

$$\bar{x}_2 = \frac{3}{4}a$$

$$\bar{x}_3 = a + \frac{1}{2}\left(\frac{L}{2} - a\right)$$

$$= a + \frac{L}{4} - \frac{a}{2} = \left(\frac{a}{2} + \frac{L}{4}\right)$$

Deflection, $y_{B/C} = \frac{1}{EI}(area)_{BC}\,\bar{x}_B = \frac{1}{EI}\sum Ax$

$$= \frac{1}{EI}\left[A_{m_1}\bar{x}_1 + A_{m_2}\bar{x}_2 + A_{m_3}\bar{x}_3\right]$$

$$= \frac{1}{EI}\left[\left(\frac{wa^3}{2}\right)\frac{2}{3}a - \left(\frac{wa^3}{6}\frac{3}{4}a\right) + \left(\frac{wa^2 L}{4} - \frac{wa^3}{2}\right)\left(\frac{a}{2} + \frac{L}{4}\right)\right]$$

$$= \frac{1}{EI}\left[\frac{wa^4}{3} - \frac{wa^4}{8} + \frac{wa^3 L}{8} + \frac{wa^2 L^2}{16} - \frac{wa^4}{4} - \frac{wa^3 L}{8}\right]$$

$$= \frac{1}{EI}\left[-\frac{wa^4}{24} + \frac{wa^2 L^2}{16}\right]$$

This deflection is above the tangent passing through C, therefore, the required expression of the maximum deflection,

$$y_{max} = -y_{B/C} = \frac{wa^4}{24EI} - \frac{wa^2 L^2}{16EI} \quad \textit{Answer}$$

Problem P5.41:

A simply supported beam of length L carries three equal concentrated loads of P as shown in Figure P5.41. Using area moment method, find an expression of maximum deflection. Also determine the value of the maximum deflection if $P = 25kN$, $L = 6m$, $E = 200GPa$ and the cross-sectional area $A = 125mm \times 250mm$.

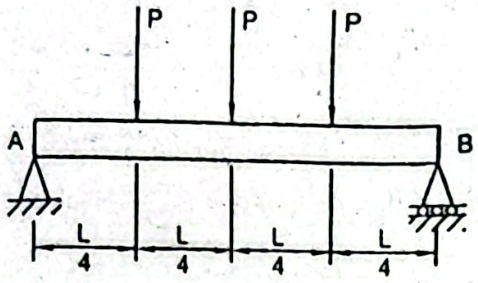

Figure P5.41

Given Data:

Length of beam, $L = 6m$

Width of beam, $b = 125mm$

Depth of beam, $h = 250mm$

Concentrated load, $P = 25kN$

Modulus of elasticity, $E = 200GPa$

To Find:

- Expression of maximum deflection, y_{max}
- Value of maximum deflection

Solution:

Free body diagram of the entire beam, elastic curve of the beam in the deflected conditic and the bending moment diagram are shown in the figures below.

For symmetric loading, $R_A = R_B = \frac{3P}{2}$

Bending moment,

For $0 < x < L/4$ $M_x = R_A x = \frac{3Px}{2}$

At $x = L/4$, $M_{x=L/4} = \frac{3PL}{8}$

Bending moment,

For $L/4 < x < L/2$ $M_x = R_A x - P\left(x - \frac{L}{4}\right)$

$$= \frac{3}{2}Px - Px + \frac{PL}{4} = \frac{Px}{2} + \frac{PL}{4}$$

At $x = \frac{L}{2}$, $M_{x=L/2} = \frac{PL}{4} + \frac{Pl}{4} = \frac{Pl}{2}$

Maximum deflection occurs at the mid point of the beam.

To find moment areas, $A_{m_1} = \frac{1}{2} \times \frac{3PL}{8} \times \frac{L}{4} = \frac{3PL^2}{64}$

$$A_{m_2} = \frac{3PL}{8} \times \frac{L}{4} = \frac{3PL^2}{32}$$

and $A_{m_3} = \frac{1}{2} \times \left(\frac{PL}{2} - \frac{3PL}{8}\right) \times \frac{L}{4} = \frac{1}{2} \times \frac{PL}{8} \times \frac{L}{4} = \frac{PL^2}{64}$

Location of the ...

$$\bar{x}_2 = \frac{L}{4} + \frac{1}{2} \times \frac{L}{4} = \frac{3L}{8}$$

$$\bar{x}_3 = \frac{L}{4} + \frac{2}{3} \times \frac{L}{4} = \frac{5L}{12}$$

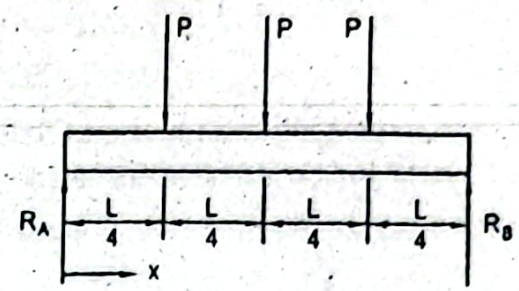

Free body diagram of entire beam

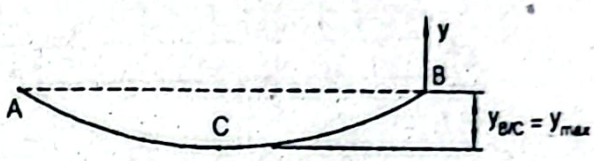

Elastic curve of deflected beam

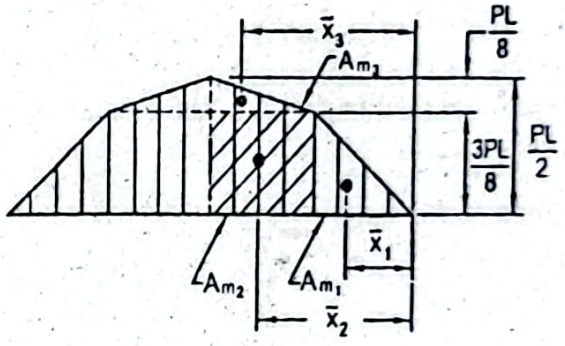

Bending moment diagram

eflection,

$$y_{B/C} = \frac{1}{EI}(area)_{BC}\,\bar{x}_B = \frac{1}{EI}\sum Ax$$

$$= \frac{1}{EI}\left[A_{m_1}\bar{x}_1 + A_{m_2}\bar{x}_2 + A_{m_3}\bar{x}_3\right]$$

$$= \frac{1}{EI}\left[\frac{3PL^2}{64}\frac{L}{6} + \frac{3PL^2}{32}\frac{3L}{8} + \frac{PL^2}{64}\frac{5L}{12}\right]$$

$$= \frac{1}{EI}\left[\frac{PL^3}{128} + \frac{9PL^3}{256} + \frac{5PL^3}{768}\right] = \frac{19PL^3}{384EI}$$

is deflection is above the tangent passing through C, therefore, the required expression the maximum deflection,

$$y_{max} = -y_{B/C} = -\frac{19PL^3}{384EI} \quad \textit{Answer}$$

Now substituting the values, $y_{max} = -\dfrac{19\times25\times10^3\times6^3}{384\times200\times10^9\times\left(\frac{1}{12}\times125\times250^3\right)\times10^{-12}}\times10$

$= -8.21mm$ *Answer*

Problem P5.42:

A simply supported beam carries a triangular distribution of load with maximum valu w_0 at the mid point as shown in Figure P5.42. Using area moment method, find expression of maximum deflection. Also determine the slope at the supporting end of beam.

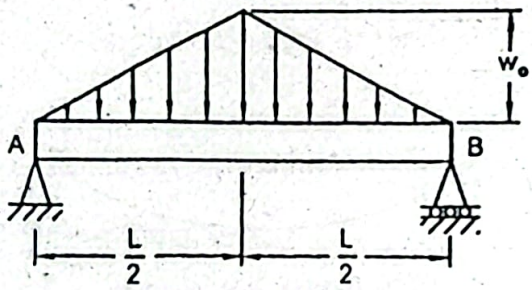

Figure P5.42

Given Data:

Length of beam $= L$

Load = Triangular distribution with maximum value of w_0

To Find:

- Expression of maximum deflection, y_{max}
- Slope at the end, θ_B

Solution:

Free body diagram of the entire beam, elastic curve of the beam in the deflected conditi and the bending moment diagram are shown in the figures below.

For the symmetric loading, $R_A = R_B = \dfrac{w_0 L}{4}$

Bending moment considering the reaction R_A only,

$$M_x = R_A x = \frac{w_0 L x}{4}$$

At $x = L/2$, $$M_{x=L/2} = \frac{w_0 L^2}{8}$$

Bending moment considering the triangular distribution of the load only,

$$M_x = -\frac{1}{2} w x \frac{x}{3} = -\frac{w x^2}{6}$$

We have from the similar triangles,

$$\frac{w}{x} = \frac{w_0}{L/2}$$

or, $w = \frac{2w_0 x}{2}$

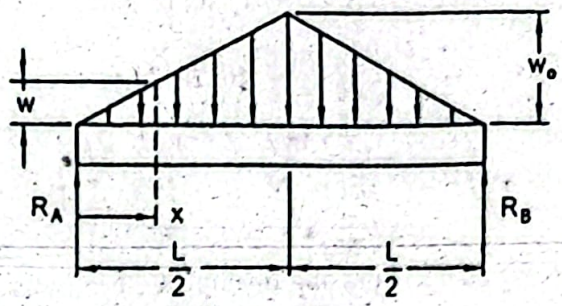

Free body diagram of entire beam

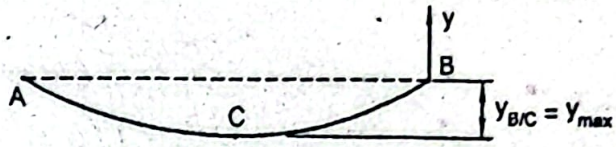

Elastic curve of deflected beam

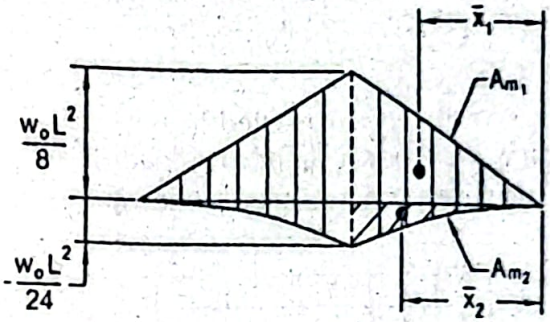

Bending moment diagram

Substituting the value of w we find the bending moment,

$$M_x = -\frac{w_0 x^3}{3L}$$

At $x = L/2$, $$M_{x=L/2} = -\frac{w_0 L^2}{24}$$

Maximum deflection occurs at the mid point of the beam.

To find the moment areas, $A_{m_1} = \frac{1}{2} \times \frac{w_0 L^2}{8} \times \frac{L}{2} = \frac{w_0 L^3}{32}$

and, $$A_{m_2} = \int_0^{L/2} M_x dx = -\int_0^{L/2} \frac{w_0}{3L} x^3 dx$$

$$= -\frac{w_0}{3L}\left[\frac{x^4}{4}\right]_0^{L/2} = -\frac{w_0 L^3}{192}$$

Location of the centroid, $\bar{x}_1 = \frac{2}{3}\frac{L}{2} = \frac{L}{3}$

and, $\bar{x}_2 = \frac{4}{5} \times \frac{L}{2} = \frac{2L}{5}$

Deflection, $$y_{B/C} = \frac{1}{EI}(area)_{BC}\,\bar{x}_B = \frac{1}{EI}\sum Ax$$

$$= \frac{1}{EI}\left[A_{m_1}\bar{x}_1 + A_{m_2}\bar{x}_2\right]$$

$$= \frac{1}{EI}\left[\frac{w_0L^3}{32}\frac{L}{3} - \frac{w_0L^3}{192}\frac{2L}{5}\right]$$

$$= \frac{w_0L^3}{120EI}$$

This deflection is above the tangent passing through C, therefore, the required exp of the maximum deflection,

$$y_{max} = -y_{B/C} = -\frac{w_0L^3}{120EI} \quad Answer$$

Now the end slope, $$\theta_B = \theta_{BC} = \frac{1}{EI}(area)_{BC} = \frac{1}{EI}\left[A_{m_1} + A_{m_2}\right]$$

$$= \left[\frac{w_0L^3}{32} - \frac{w_0L^3}{192}\right] = \frac{5w_0L^3}{192EI} \quad Answer$$

Problem P5.43:

An overhanging beam carries a uniformly distributed load of w over its entire leng shown in Figure P5.43. Determine an expression of deflection at its free end.

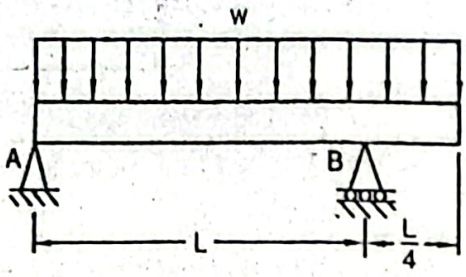

Figure P5.43

Given Data:

Length of beam $= \frac{5L}{4}$

Uniformly distributed load $= w$

To Find:

- Expression of deflection at free end

Solution:

Free body diagram of the entire beam, elastic curve of the beam in the deflected condit and the bending moment diagram are shown in the figures below.

In static equilibrium condition,

$$+\uparrow \sum F_y = 0$$

$$\text{or, } R_A + R_B = w\left(L + \frac{L}{4}\right) = \frac{5wL}{4}$$

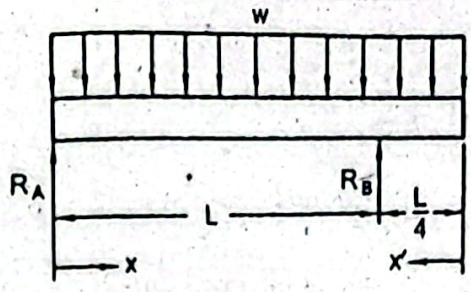

Free body diagram of entire beam

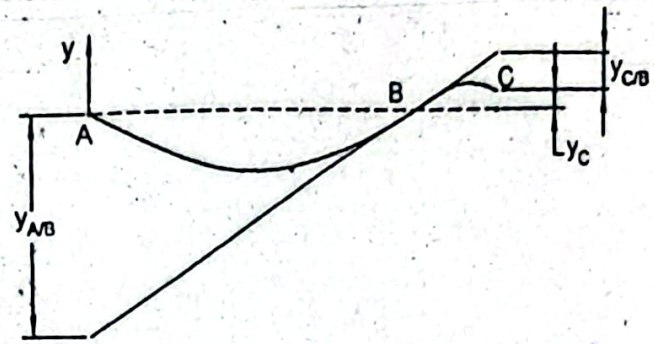

Elastic curve of deflected beam

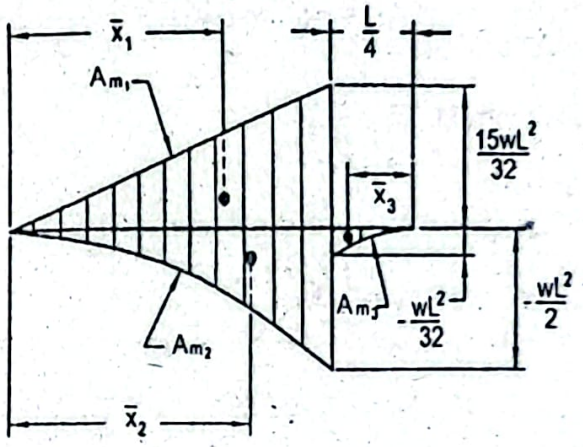

Bending moment diagram

$$+\circlearrowleft \sum M_A = 0$$

$$\text{or, } R_B \times L - \frac{5wL}{4} \times \frac{5L}{8} = 0$$

$$\text{or, } R_B = \frac{25wL}{32}$$

efore, $$R_A = \frac{5wL}{4} - R_B = \frac{5wL}{4} - \frac{25wL}{32} = \frac{15wL}{32}$$

ling moment considering only the reaction R_A from the left side,

$0 < x < a$ $$M_x = R_A x = \frac{15wLx}{32}$$

$= L$, $$M_{x=L} = \frac{15wL^2}{32}$$

ing moment considering only the distributed load from the left side,

$$M_x = -\frac{wx^2}{2}$$

At $x = L$, $$M_{x=L} = -\frac{wL^2}{2}$$

Bending moment with the distributed load from the right side,

$$M_{x'} = -\frac{wx'^2}{2}$$

At $x' = \frac{L}{4}$, $$M_{x'=L/4} = -\frac{wL^2}{32}$$

Moment areas, $$A_{m_1} = \frac{1}{2} \times \frac{15wL^2}{32} \times L = \frac{15wL^3}{64}$$

$$A_{m_2} = -\int_0^L M_x dx = -\int_0^L \frac{wx^2}{2} dx = -\frac{w}{2}\left[\frac{x^3}{3}\right]_0^L = -\frac{wL^3}{6}$$

$$A_{m_3} = -\int_0^{L/4} M_x dx' = -\int_0^{L/4} \frac{wx'^2}{2} dx' = -\frac{w}{2}\left[\frac{x'^3}{3}\right]_0^L = -\frac{wL^3}{384}$$

Location of the centroid, $\bar{x}_1 = \frac{2}{3}L$

$$\bar{x}_2 = \frac{3}{4}L$$

$$\bar{x}_3 = \frac{3}{4}\frac{L}{4} = \frac{3L}{16}$$

Deflection, $$y_{A/B} = \frac{1}{EI}(area)_{AB}\bar{x}_A = \frac{1}{EI}\sum Ax$$

$$= \frac{1}{EI}\left[A_{m_1}\bar{x}_1 + A_{m_2}\bar{x}_2\right]$$

$$= \frac{1}{EI}\left[\frac{15wL^3}{64}\frac{2}{3}L - \frac{wL^3}{6}\frac{3}{4}L\right] = \frac{wL^4}{32EI}$$

Also deflection, $$y_{C/B} = \frac{1}{EI}(area)_{CB}\bar{x}_C$$

$$= \frac{1}{EI}\left[Am_3\bar{x}_3\right]$$

$$= \frac{1}{EI}\left[-\frac{wL^3}{384}\frac{3L}{16}\right] = -\frac{wL^4}{2048EI}$$

We have from the similar triangles,

$$\frac{y_{A/B}}{L} = \frac{y_{C/B} + y_C}{L/4}$$

Now to find the required expression of deflection at the free end,

$$\text{or, } y_C = \frac{1}{4}|y_{AB}| - |y_{C/B}|$$

$$= \frac{1}{4}\left|\frac{wL^4}{32EI}\right| - \left|\frac{wL^4}{2048EI}\right| = \frac{15wL^4}{2048EI} \quad \textit{Answer}$$

Problem P5.44:

An overhanging beam carries a distributed load of $20kN/m$ and a concentrated load of $15kN$ as shown in Figure P5.44. Determine the free end deflection using area moment method for flexural rigidity $EI = 80\times10^4\,Nm^2$.

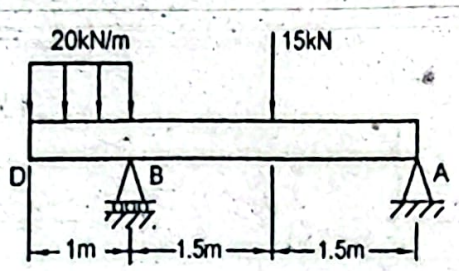

Figure P5.44

Given Data:

Length of beam, $L = 4m$

Uniformly distributed load, $w = 20kN/m$

Concentrated load, $P = 15kN$

Flexural rigidity, $EI = 80\times10^4\,Nm^2$

To Find:

- Deflection of free end, y_D

Solution:

Free body diagram of the entire beam, elastic curve of the beam in the deflected condition and the bending moment diagram are shown in the figures below.

In static equilibrium condition,

$$+\uparrow \sum F_y = 0$$

or, $R_A + R_B - w\times1.0 - P = 0$

or, $R_A + R_B = 20\times1 + 15 = 35$

$$+\circlearrowleft \sum M_A = 0$$

or, $-R_B\times3 + P\times1.5 + w\times1.0\times3.5 = 0$

or, $-R_B\times3 + 15\times1.5 + 20\times1.0\times3.5 = 0$

or, $R_B = 30.83kN$

Therefore, $R_A = 35 - R_B = (35 - 30.83)kN = 4.17kN$

To find the moment areas,

$$A_{m_1} = \frac{1}{2}\times12.51\times3 = 18.765kNm^2$$

$$A_{m_2} = -\frac{1}{2}\times22.5\times1.5 = -16.875kNm^2$$

$$A_{m_3} = -\int_0^1 \frac{wx^2}{2}dx = -\left[\frac{wx^3}{6}\right]_0^1 = -\frac{20\times1^3}{6} = -3.33kNm^2$$

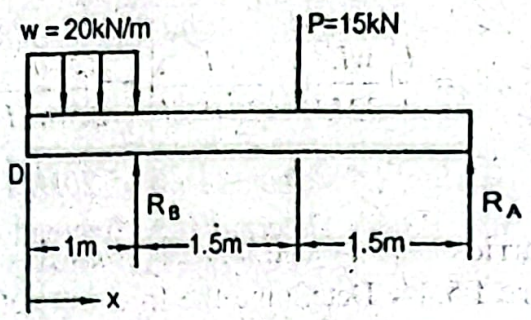

Free body diagram of entire beam

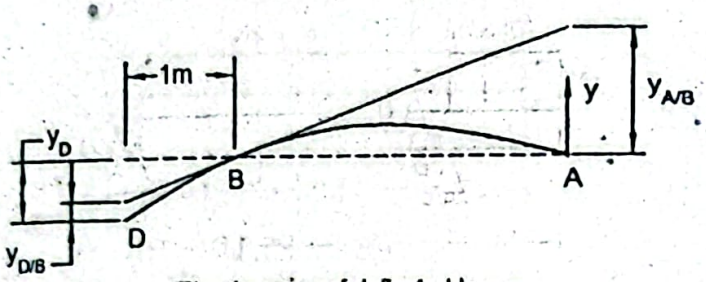

Elastic curve of deflected beam

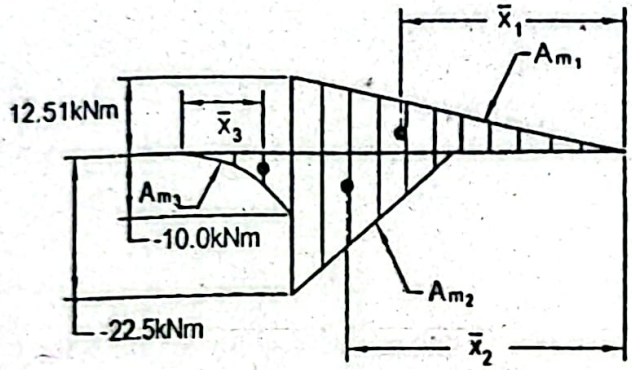

Bending moment diagram

Deflection, $$y_{A/B} = \frac{1}{EI}(area)_{AB}\,\bar{x}_A$$

$$= \frac{1}{EI}\left[A_{m_1}\bar{x}_1 + A_{m_2}\bar{x}_2\right]$$

$$= \frac{10^3}{80\times10^4}\left[18.765\times10^3\times\frac{2}{3}\times3 - 16.875\times10^3\times\left(1.5+\frac{2}{3}\right.\right.$$

$$= -5.82mm$$

Note: Negative sign indicates that the value is below the tangent.

Deflection, $$y_{D/B} = \frac{1}{EI}(area)_{DB}\,\bar{x}_D$$

$$= \frac{1}{EI}\left[A_{m_3}\bar{x}_3\right]$$

$$= \frac{10^3}{80\times10^4}\left[-3.33\times10^3\times\frac{3}{4}\times1.0\right]$$

$$= -3.122mm$$

Note: Negative sign indicates that the value is below the tangent.

Now from the similar triangles, considering the absolute value only,

$$\frac{y_{A/B}}{3} = \frac{y_D - y_{D/B}}{1.0}$$

$$\text{or, } \frac{5.82}{3} = \frac{y_D - 3.122}{1.0}$$

$$\text{or, } y_D = 5.06mm$$

Therefore, the required free end deflection, $y_D = -5.06mm$ ***Answer***

Problem P5.45:

An overhanging beam having cross-section of $100mm \times 200mm$ carries two concentrated loads as shown in Figure P5.45. Find the maximum deflection and the deflection at the free end using area moment method. Also determine the slope at the end A. Use $E = 200GPa$.

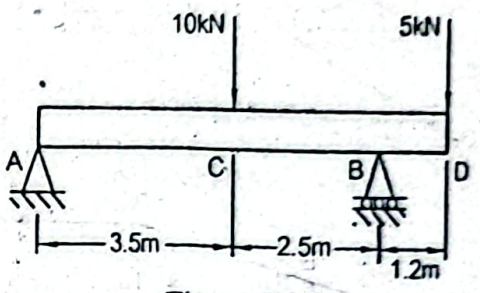

Figure P5.45

Given Data:

Length of beam $= 7.2m$

Width of beam, $b = 100mm$

Depth of beam, $h = 200mm$

Concentrated loads, $P = 10kN$ and $5kN$

Modulus of elasticity, $E = 200GPa$

To Find:

Maximum deflection, y_{max}

Deflection of free end, y_D

Slope at end A, θ_A

Solution:

Free body diagram of the entire beam, elastic curve of the beam in the deflected condition and the bending moment diagram are shown in the figures below.

For static equilibrium condition,

$$+\uparrow \sum F_y = 0$$

$$\text{or, } R_A + R_B - 10 - 5 = 0$$

$$\text{or, } R_A + R_B = 15$$

$$+\circlearrowleft \sum M_A = 0$$

$$\text{or, } R_B \times 6 - 10 \times 3.5 - 5 \times 7.2 = 0$$

$$\text{or, } R_B = 11.83kN$$

Therefore, $R_A = 15 - R_B = (15 - 11.83)kN = 3.17kN$

$$= \frac{1}{13.33\times10^6}\left[\frac{1}{2}\times\left(3.17\times10^3\times d\right)\times d\times\frac{1}{3}d\right]\times10^3$$

$$= 0.0396d^3 mm$$

Now from the similar triangles,

$$\frac{y_{B/A}}{6} = \frac{y_{A/E} + y_{E/A}}{d}$$

$$\text{or, } \frac{6.608}{6} = \frac{0.0793d^3 + 0.0396d^3}{d}$$

$$\text{or, } d = 3.043mmm$$

Therefore, $y_{max} = y_{A/E} = 0.0793\times(3.043)^3 mm$

$$= 2.234mm \text{ Answer}$$

Deflection, $y_{A/B} = \frac{1}{EI}(area)_{AB}\bar{x}_A$

$$= \frac{1}{13.33\times10^6}\left[\frac{1}{2}\times19.02\times10^3\times6\times\frac{2}{3}\times6 - \frac{1}{2}\times25\times10^3\times2.5\times\left(3.5+\frac{2}{3}\times2.5\right)\right]10^3$$

$$= 5.011mm$$

Note: Positive value indicates that the value is below tangent.

Deflection, $y_{D/B} = \frac{1}{EI}(area)_{DB}\bar{x}_D$

$$= \frac{1}{13.33\times10^6}\left[-\frac{1}{2}\times6\times10^3\times1.2\times\frac{2}{3}\times1.2\right]\times10^3$$

$$= -0.216mm$$

Note: Negative value indicates that the value is below tangent.
From the similar triangles we find,

$$\frac{y_{A/B}}{6} = \frac{y_{D/B} + y_D}{1.2}$$

$$\text{or, } \frac{5.011}{6} = \frac{0.216 + y_D}{1.2}$$

$$\text{or, } y_D = 0.786mm \text{ Answer}$$

Now to find the slope at end A,

$$\theta_A = \frac{1}{EI}(area)_{AE} = \frac{1}{13.33\times10^6}\left[\frac{1}{2}\times3.17\times10^3\times3.043\times3.043\right]$$

$$= 1.10\times10^{-3} rad \text{ Answer}$$

Problem P5.46:
A simply supported beam has moment of inertia of I over half of its length and that of $2I$ over rest half of its length as shown in Figure P5.46. It carries a concentrated load of W at the mid point. Determine the deflection at the mid point of the beam.

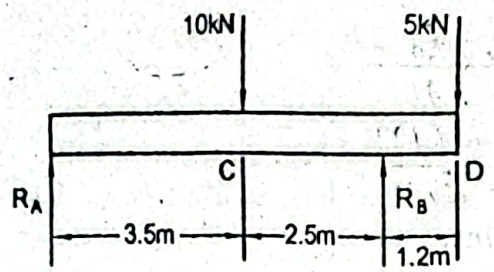

Free body diagram of entire beam

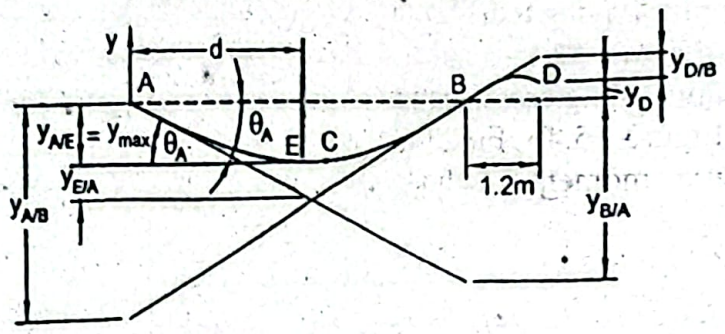

Elastic curve of deflected beam

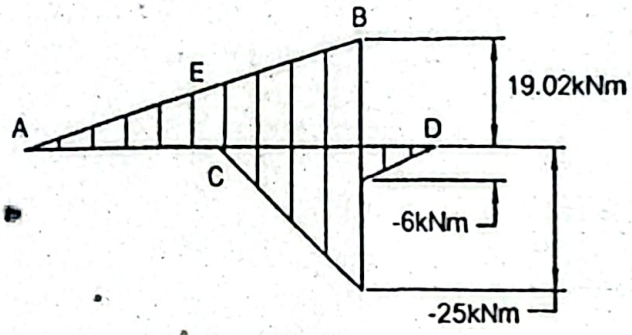

Bending moment diagram

Flexural rigidity, $EI = 200\times10^9\times\frac{1}{12}\times100\times200^3\times10^{-12}\,Nm^2 = 13.33\times10^6\,Nm^2$

Deflection, $y_{B/A} = \frac{1}{EI}(area)_{BA}\,\bar{x}_B$

$$= \frac{1}{13.33\times10^6}\left[\frac{1}{2}\times19.02\times10^3\times6\times\frac{1}{3}\times6 - \frac{1}{2}\times25\times10^3\times2.5\times\frac{1}{3}\times2.5\right]\times10$$

$$= 6.608mm$$

Note: Positive value indicates that the value is above the tangent.

Let d is the distance from the left support where the maximum deflection occ provided d will be less than $3.5m$.

Deflection, $y_{A/E} = \frac{1}{EI}(area)_{AE}\,\bar{x}_A$

$$= \frac{1}{13.33\times10^6}\left[\frac{1}{2}\times\left(3.17\times10^3\times d\right)\times d\times\frac{2}{3}d\right] = 0.0793d^3m$$

Deflection, $y_{E/A} = \frac{1}{EI}(area)_{EA}\,\bar{x}_E$

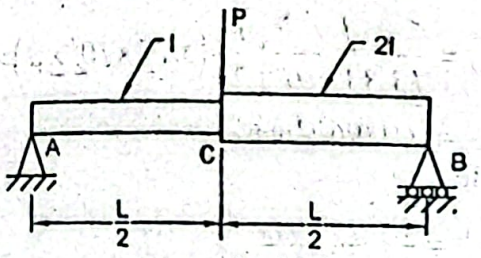

Figure P5.46

Given Data:
Length of beam $= L$
Concentrated load $= P$

To Find:
- Deflection at mid point, y_C

Solution:
Free body diagram of the entire beam, elastic curve of the beam in the def condition, bending moment diagram and the M / EI diagram are shown in the fi below.

In static equilibrium condition for the symmetric loading, $R_A = R_B = \frac{P}{2}$

The following table shows the values of the bending moment and M / EI.

Location	A	C_1	C_2	B
Bending moment	0	$\frac{PL}{4}$	$\frac{PL}{4}$	0
$\frac{M}{EI}$	0	$\frac{PL}{4EI}$	$\frac{PL}{8EI}$	0

To find the areas under M / EI diagram,

$$\left(\frac{A_m}{EI}\right)_1 = \frac{1}{2} \times \frac{PL}{4EI} \times \frac{L}{2} = \frac{PL^2}{16EI}$$

$$\left(\frac{A_m}{EI}\right)_2 = \frac{1}{2} \times \frac{PL}{8EI} \times \frac{L}{2} = \frac{PL^2}{32EI}$$

Deflection, $$y_{B/A} = \frac{1}{EI}(area)_{BA}\,\bar{x}_B = \sum\left(\frac{A}{EI}\right)\bar{x}$$

or, $$y_{B/A} = \left[\left(\frac{A_m}{EI}\right)_1 \bar{x}_1 + \left(\frac{A_m}{EI}\right)_2 \bar{x}_2\right]$$

Substituting the values, $$y_{B/A} = \left[\frac{PL^2}{16EI}\left(\frac{L}{2} + \frac{1}{3}\frac{L}{2}\right) + \frac{PL^2}{32EI}\left(\frac{2}{3}\frac{L}{2}\right)\right]$$

$$= \frac{5PL^3}{96EI}$$

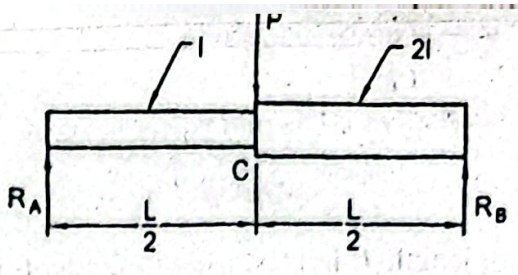

Free body diagram of entire beam

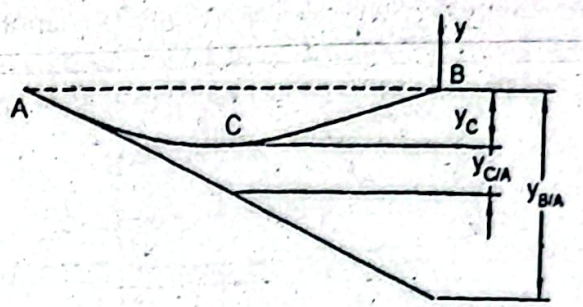

Elastic curve of deflected beam

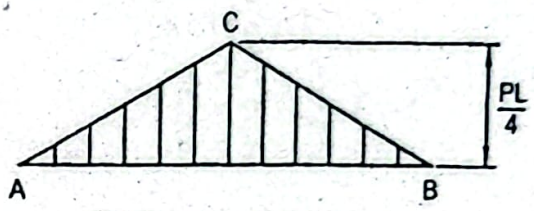

Bending moment diagram

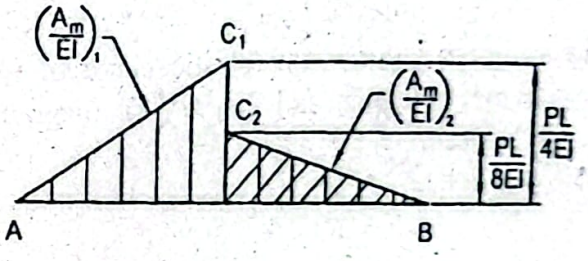

$\frac{M}{EI}$ diagram

flection,

$$y_{C/A} = \frac{1}{EI}(area)_{CA}\,\bar{x}_C = \sum\left(\frac{A}{EI}\right)\bar{x}$$

$$= \left[\left(\frac{A_m}{EI}\right)_1 \bar{x}_1\right] = \frac{PL^2}{16EI}\,\frac{1}{3}\,\frac{L}{2} = \frac{PL^3}{96EI}$$

m the similar triangles we find,

$$\frac{y_{B/A}}{L} = \frac{y_{C/A} + y_C}{L/2}$$

or, $$y_C = \frac{y_{B/A}}{2} - y_{C/A} = \frac{5PL^3}{96 \times 2EI} - \frac{PL^3}{96EI}$$

$$= \frac{3PL^3}{192EI} = \frac{PL^3}{64EI}$$

: The value is positive since it is above the tangent.

Therefore, the required deflection at the mid point,

$$y_C = -\frac{PL^3}{64EI} \quad \textit{Answer}$$

Problem P5.47:

A simply supported beam of length L has moment of inertia of $2I$ at the middle I at the end quarters as shown in Figure P5.47. Using area moment method, deflection at the mid point where a concentrated load P is applied.

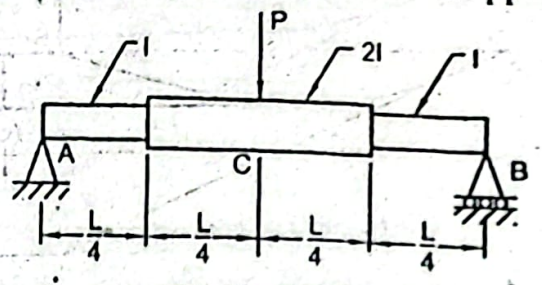

Figure P5.47

Given Data:

Length of beam = L

Concentrated load = P

To Find:

- Deflection at mid point, y_C

Solution:

Free body diagram of the entire beam, elastic curve of the beam in the d condition, bending moment diagram and the M/EI diagram are shown in the below.

In static equilibrium condition,

$$+\uparrow \sum F_y = 0$$

$$\text{or, } R_A + R_B - P = 0$$

$$\text{or, } R_A + R_B = P$$

For the symmetric loading, $R_A = R_B = \frac{P}{2}$

The following table shows the values of the bending moment (M) and M/EI.

Location	A	D_1	D_2	C	E_1	E_2	E
Bending moment (M)	0	$\frac{PL}{8}$	$\frac{PL}{8}$	$\frac{PL}{4}$	$\frac{PL}{8}$	$\frac{PL}{8}$	0
$\frac{M}{EI}$	0	$\frac{PL}{8EI}$	$\frac{PL}{16EI}$	$\frac{PL}{8EI}$	$\frac{PL}{16EI}$	$\frac{PL}{8EI}$	0

Deflection, $y_{B/C} = \frac{1}{EI}(area)_{BC}\,\bar{x}_B = \sum\left(\frac{A}{EI}\right)\bar{x}$ (Since EI is variab

$$= \left[\left(\frac{A_m}{EI} \right)_1 \bar{x}_1 + \left(\frac{A_m}{EI} \right)_2 \bar{x}_2 + \left(\frac{A_m}{EI} \right)_3 \bar{x}_3 \right] \qquad (i)$$

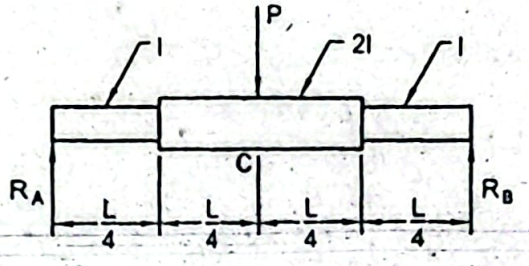

Free body diagram of entire beam

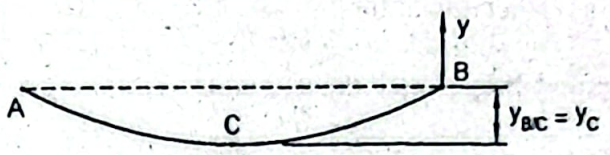

Elastic curve of deflected beam

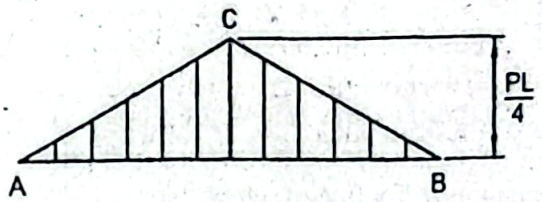

Bending moment diagram

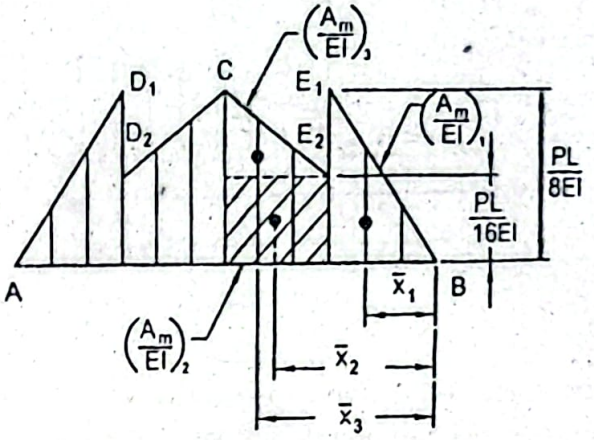

$\frac{M}{EI}$ diagram

To find the areas of M / EI, $\left(\frac{A_m}{EI} \right)_1 = \frac{1}{2} \frac{PL}{8EI} \frac{L}{4} = \frac{PL^2}{64EI}$

$$\left(\frac{A_m}{EI} \right)_2 = \frac{PL}{16EI} \frac{L}{4} = \frac{PL^2}{64EI}$$

$$\left(\frac{A_m}{EI} \right)_3 = \frac{1}{2} \left(\frac{PL}{8EI} - \frac{PL}{16EI} \right) \frac{L}{4} = \frac{PL^2}{128EI}$$

Location of the centroid, $\bar{x}_1 = \frac{2}{3} \times \frac{L}{4} = \frac{L}{6}$

Problem E5.3:

Using double integration method, determine the maximum deflection and end slope of a simply supported beam of length $5m$ and a sinusoidal distribution of load as shown in Figure E5.3. Flexural rigidity $EI = 40\times10^{6}\ Nm^{2}$.

Ans.: $y_{max} = -1.60mm;\ \theta_{A} = -1.01\times10^{-3}\ rad$

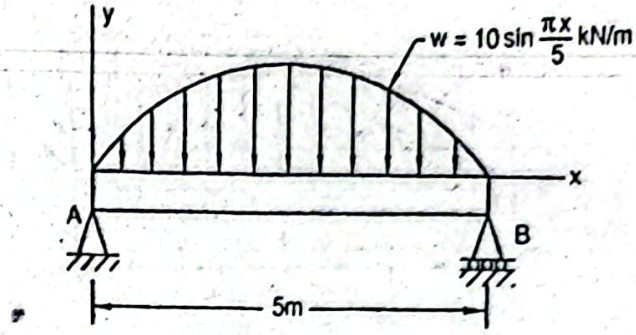

Figure E5.3

Problem E5.4:

A cantilever beam of length $4m$ carries a uniformly distributed load of $10kN/m$ over its entire length and a concentrated load of $5kN$ at its free end as shown in Figure E5.4. Using area moment method, determine the maximum deflection and the end slope. Consider flexural rigidity $EI = 90\times10^{6}\ Nm^{2}$

Ans.: $y_{max} = -4.74mm;\ \theta_{B} = -1.63\times10^{-3}\ rad$

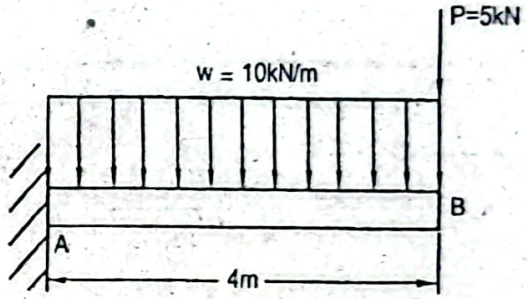

Figure E5.4

Problem E5.5:

A simply supported beam carries a triangular distribution of load over half of its length and a uniformly distributed load over the rest half of the length as shown in Figure E5.5. Determine the deflection at the mid point using area moment method.

Ans.: $y_{C} = -\dfrac{123w_{0}L^{4}}{11520EI}$

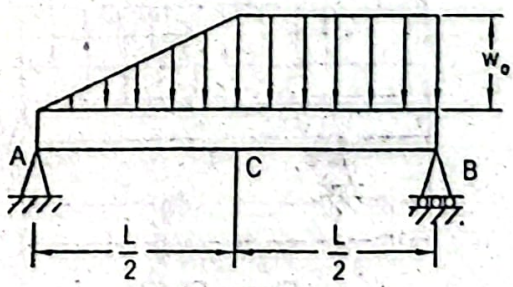

Figure E5.5

$$\bar{x}_2 = \frac{L}{4} + \frac{1}{2} \times \frac{L}{4} = \frac{3L}{8}$$

$$\bar{x}_3 = \frac{L}{4} + \frac{2}{3} \times \frac{L}{4} = \frac{5L}{12}$$

Substituting the values in Equation (i),

$$y_{B/C} = \left[\frac{PL^2}{64EI} \frac{L}{6} + \frac{PL^2}{64EI} \frac{3L}{8} + \frac{PL^2}{128EI} \frac{5L}{12} \right]$$

$$= \left[\frac{PL^3}{384EI} + \frac{3PL^3}{512EI} + \frac{5PL^3}{1536} \right] = \frac{18PL^3}{1536EI} = \frac{3PL^3}{256EI}$$

Therefore, the required deflection at the mid point,

$$y_C = -\frac{3PL^3}{256EI} \quad \textit{Answer}$$

EXERCISES

Problem E5.1:

Using direct integration method find the expressions of elastic curve, maxim deflection and free end slope for a cantilever beam of length L subjected to a triangu distribution of load with maximum value of w_0 as shown in Figure E5.1.

Ans.: $EIy = -\frac{w_0 x^5}{12L} + \frac{w_0 L^3}{24} x - \frac{w_0 L^4}{30}$; $y_{max} = -\frac{w_0 L^4}{30EI}$; $\theta = \frac{w_0}{24}$

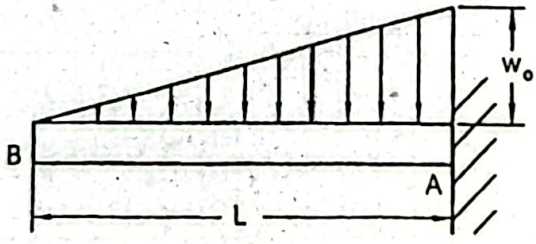

Figure E5.1

Problem E5.2:

Using double integration method derive an expression of end deflection of a cantileve beam of length L subjected to a uniformly distributed load of w over half of its lengt from the supporting end as shown in Figure E5.2.

Ans.: $y_{max} = -\frac{7wL^4}{384EI}$

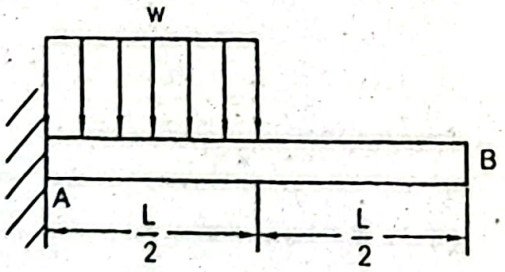

Figure E5.2

Problem E5.6:
Using area moment method find an expression of free end deflection of a cantilever subjected to a triangular distribution of load over half of its length and a unif distributed load over the rest half of the length as shown in Figure E5.6.

Ans.: $y_B = -\frac{11}{19}$

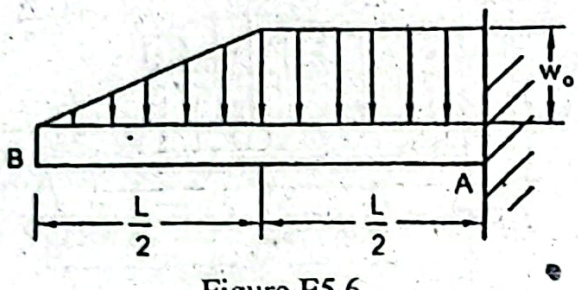

Figure E5.6

Problem E5.7:
A simply supported beam of length $4m$ having rectangular cross-sectio $50mm \times 100mm$ is subjected to a couple of $3kNm$ as shown in Figure E5.7. Using moment method, determine the deflection at the point of application of the couple ar maximum deflection. Consider modulus of elasticity $E = 200GPa$.

Ans.: $y_C = 1.8mm$; $y_{max} = 2.$

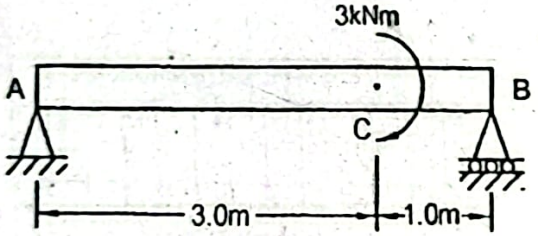

Figure E5.7

Problem E5.8:
An overhanging beam carries a concentrated load $P = 10kN$ at its free end a uniformly distributed load $w = 10kN/m$ between two supports as shown in Figure 1 Using area moment method, find the deflection at the free end. Consider flexural rig $EI = 60 \times 10^3 Nm^2$.

Ans.: $y_C = -3.46$

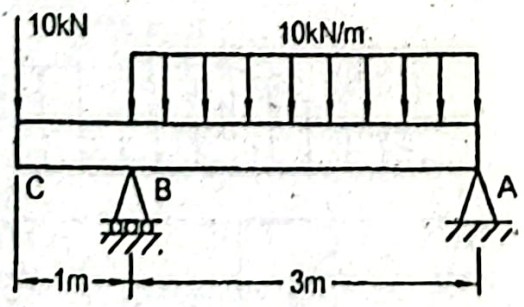

Figure E5.8

Problem E5.9:

A cantilever beam of length $4m$ has moment of inertia $I = 4\times10^{-4}m^4$ and modulus of elasticity $E = 200GPa$. The beam carries two equal concentrated loads $P = 10kN$ as shown in Figure E5.9. Determine the deflection and the slope at the free end using area moment method.

Ans.: $y_C = -1.92mm;\ \theta_C = -7.5\times10^{-4}\ rad$

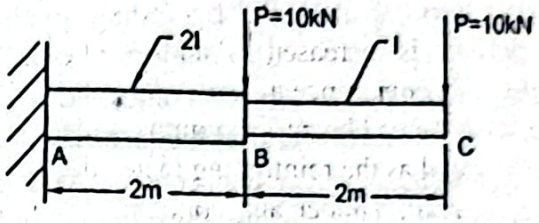

Figure E5.9

Problem E5.10:

A $4m$ long simply supported beam has moment of inertia $I_1 = 8\times10^{-4}m^4$ at the middle half and $I_2 = 4\times10^{-4}m^4$ at the end quarters as shown in Figure E5.10. If the deflection of the beam at the mid point is not to exceed $0.938mm$, using double integration method determine the maximum concentrated load that can be applied at the mid point C of the beam. Use modulus of elasticity $E = 200GPa$.

Ans.: $P = 100kN$

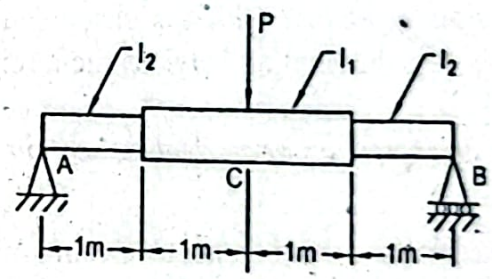

Figure E5.10

Chapter VI

Reinforced Beams

Question 6.1: Write a short note on reinforced beam.

Answer:

When the strength of a beam is increased by adding another reinforcing mater beam is called the *reinforced beam*. Since a *composite beam* is fabricated from mo one material, therefore, a reinforced beam is a composite beam. A *timber beam* m steel or any other suitable metal as the reinforcing material. A *concrete beam* usuall steel as the reinforcing material. Timber and concrete both can withstand compr load but they are weak in tension. Therefore, both timber and concrete usually use as the reinforcing material to resist the tensile load.

To fabricate a timber beam with steel as the reinforcing material, steel strip ma attached by bolts so that no slip occurs between them. A concrete beam uses steel which may usually be round, twisted, deformed etc. Concrete can withstand compressive stress but its tensile stress resisting capacity is very low. In the desig tensile stress withstanding capacity is considered as zero. For many decades concre being used as an excellent building material. Concrete does not get rusted and it is proof. Concrete and steel make excellent natural adhesion or bonding between them. important property of concrete and steel is that they have almost the same coefficien thermal expansion. As a matter of fact with the change in temperature both of t expand or contract equally, thus the bonding between them remains unharmed.

Question 6.2: Determine an expression of equivalent section in a composite beam.

Answer:

Flexure formula is applicable to a homogeneous beam only. As a matter of fac composite beam section is transformed into an equivalent homogeneous beam sect before using the flexure formula. In dealing with the bending of a composite beam i assumed that the plane section remains plane after deformation, as a result strain becor directly proportional to the distance from the neutral axis. In the analysis of a compos beam strains and load capacities are considered unchanged.

A composite beam consisting of timber with reinforcing material of steel strip is shown Figure 6.1a. The timber and steel strip are bolted together firmly so that no slip occu between them, as a result the elongation of steel fiber and timber fiber at the conta surface of them will be same; in other words, the strains of steel fiber and timber fiber the contact surface will be same. Therefore, one can find a relation of strain as,

$$\varepsilon_t = \varepsilon_s \qquad (6.$$

where,

ε_t = Strain of timber

ε_s = Strain of steel

But within the proportional limit we can write,

$$E_t = \frac{\sigma_t}{\varepsilon_t}, \text{ and } E_s = \frac{\sigma_s}{\varepsilon_s} \tag{6.2}$$

where,
E_s = Modulus of elasticity of steel
E_t = Modulus of elasticity of timber
σ_s = Stress in steel
σ_t = Stress in timber

From Equations (6.1) and (6.2) one obtains,

$$\frac{\sigma_t}{E_t} = \frac{\sigma_s}{E_s} \tag{6.3}$$

n the equivalent condition, the steel area and the equivalent timber area of steel must arry the same load, as a result one obtains,

$$P_s = P_t \tag{6.4}$$

here,
$_s$ = Force carried by reinforcing steel area
$_t$ = Force carried by equivalent timber area of steel

ubstituting $P = A\sigma$ in Equation (6.4) one finds,

$$A_s\sigma_s = A_t\sigma_t \tag{6.5}$$

here,
$_s$ = Area of steel cross-section
= Equivalent timber area of steel

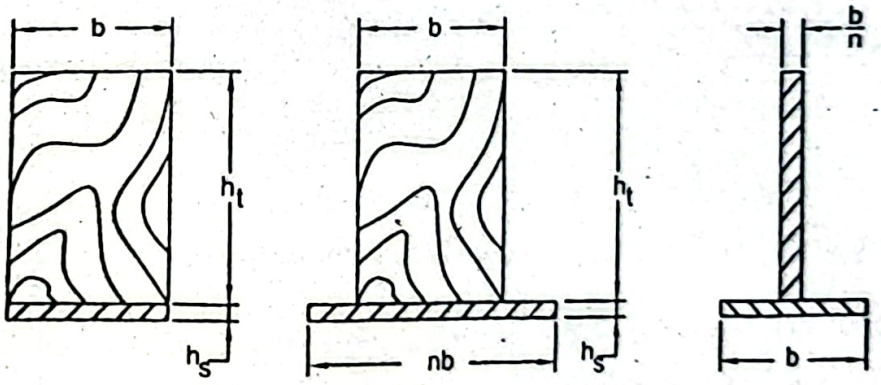

(a) (b) (c)

Figure 6.1: (a) Timber and Steel Section (b) Equivalent Timber Section (c) Equivalent Steel Section.

Figure 6.1, the symbols
: Width of beam section
: Depth of timber
= Thickness of steel strip

From Equations (6.5) and (6.5) we find,

$$A_t = \frac{E_s}{E_t} A_s$$

$$\text{or, } A_t = nA_s \qquad (6$$

where,

$n = E_s/E_t$ = Ratio of moduli of elasticity.

From Equation (6.6) the *equivalent timber area of steel* is equal to n times the steel a or *equivalent steel area of timber* is equal to $1/n$ times the timber area. Now using flexure formula to the equivalent timber section or the equivalent steel section the flex stresses can be determined easily.

When a composite section is composed of a combination of other materials, equivalent section can be obtained similarly. A composite section consisting of copp aluminum and steel is shown in Figure 6.2a. The aluminum core has been secure fastened with copper and steel. Using ratio of moduli of elasticity of steel and aluminu (E_s/E_a) and that of copper and aluminum (E_c/E_a) the composite section of copp aluminum and steel has been transformed into an equivalent aluminum section as shov in Figure 6.2b.

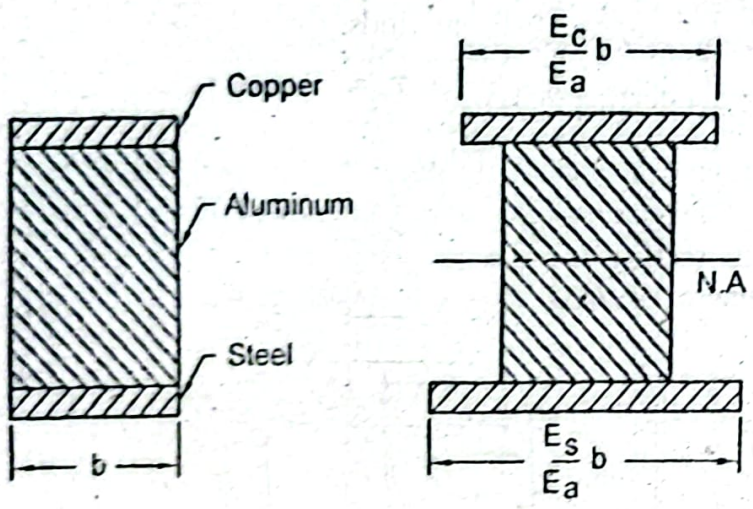

Figure 6.2: (a) Composite Section (b) Equivalent Aluminum Section.

Question 6.3: Determine expressions for resisting moment and dimensions of beam section for a reinforced cement concrete beam.

Answer:

A segment of a beam showing compressive and tensile forces is shown in Figure 6.3a. The cross-section of the beam is shown in Figure 6.3b. The equivalent concrete section and stresses in the equivalent concrete section are shown in Figures 6.3c and 6.3d respectively. While Figure 6.3d shows the equivalent steel section. The equivalent concrete area of steel must resist the bending moment as the steel.

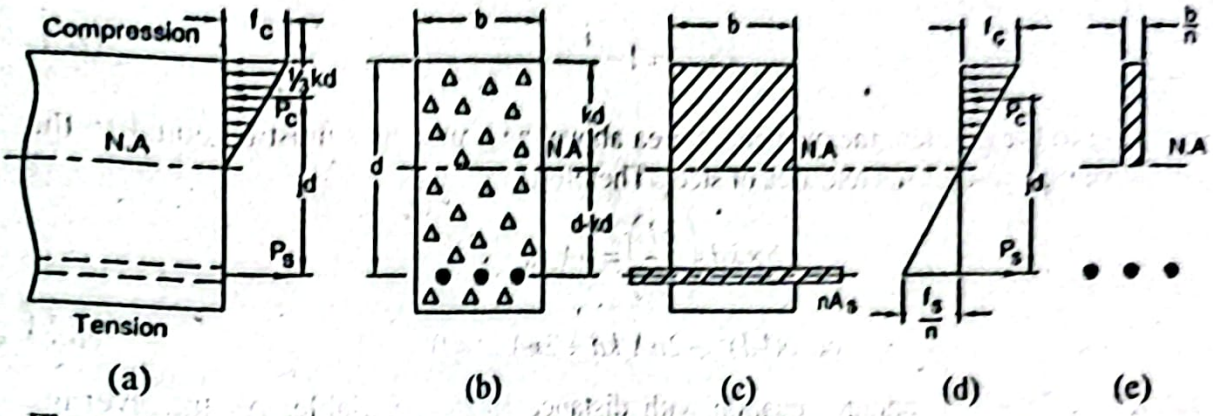

Figure 6.3: (a) A Segment of Beam Showing Forces (b) Beam Cross-Section (c) Equivalent Concrete Section (d) Stresses in Equivalent Concrete Section (d) Equivalent Steel Section.

In reinforced cement concrete beam it is assumed that concrete carries no tensile force. The compressive stress is assumed to vary linearly from the neutral axis of the beam cross-section in the compression side. On the other hand, in the tension side it is assumed that concrete carries no tensile force and only the steel carries the full tensile force. It is also assumed that steel is uniformly stressed because all of it is placed at nearly the same distance from the neutral axis. Therefore, the line of action of the tensile force acts along the center line of steel. As a result the tensile force is equal to the product of the stress in steel and the cross-section of steel bars. The stress distribution in the compression side is of triangular type. Therefore, the resultant compression force acts at a distance of one-third from the top of the beam shown in the figure.

The following symbols as shown in Figure 6.2 indicate,

b = Width of beam

d = Distance between top of beam and center of reinforcing steel

P_c = Compressive force in concrete

P_s = Tensile force in steel

f_c = Stress in concrete

f_s = Stress in steel

n = Ratio of moduli of elasticity = E_s/E_c

E_c = Modulus of elasticity of concrete

The location of the neutral axis is specified as a fraction of d by a factor k. Therefore,

kd = Distance between top of beam and neutral axis

$(d - kd)$ = Distance between neutral axis and center of reinforcing steel

Denoting j as a fraction of d

jd = Distance between line of actions of compressive force and tensile force

The compressive force in the concrete P_c acts at a distance of $\frac{1}{3}kd$ from the top of the beam and the tensile force P_s acts along the centerline of the reinforcing steel The distance jd can be related as,

$$jd = d - \frac{1}{3}kd$$

$$\text{or, } j = 1 - \frac{k}{3} \tag{6.}$$

According to the problem the moment of area above the neutral axis must be equal to th moment of equivalent concrete area of steel. Therefore,

$$(b \times kd)\left(\frac{kd}{2}\right) = nA_s(d - kd)$$

$$\text{or, } b(kd)^2 + 2nA_s kd - 2nA_s d = 0 \tag{6.8}$$

Equation (6.7) is a quadratic equation with distance kd as a variable. As the averag compressive stress in the concrete is $\frac{1}{2}f_c$, therefore, the compressive force in th concrete,

$$P_c = \frac{1}{2}f_c(b \times kd) \tag{6.9}$$

Since the distance jd is the moment arm, therefore, the resisting moment based on compressive stress f_c,

$$M_c = P_c(jd) = \frac{1}{2}f_c(b \times kd)(jd) = \frac{1}{2}f_c kjbd^2 \tag{6.10}$$

and that based on tensile stress f_s,

$$M_s = P_s(jd) = f_s A_s(jd) \tag{6.11}$$

From the similar triangles in Figure 6.3d one can find the relation as,

$$\frac{kd}{d - kd} = \frac{f_c}{\frac{f_s}{n}}$$

$$\text{or, } k = \frac{f_c}{\frac{f_s}{n} + f_c} \tag{6.12}$$

From Equations (6.7) and (6.12) respectively, the values of j and k can be obtained using the known values of f_c and f_s and n. It is usual practice to use $d = 1.5b$. If the value of d is more than this, the beam will resist higher moment due to the higher moment arm and vice versa. Now for the known values of j, k and b/d ratio the dimensions of the beam can be determined by using Equation (6.10). Considering $P_c = P_s = A_s f_s$, the value of A_s can be found.

By choosing the standard values of j and k as 7/8 and 3/8 respectively, the dimensions of the rectangular beam section are often found. Based on this practice Equations (6.10) and (6.11) yield respectively,

$$bd^2 = \frac{6M}{f_c} \tag{6.13}$$

$$P_s = \frac{M}{\frac{7}{8}d} \text{ and } A_s = \frac{P_s}{f_s} \qquad (6.14)$$

When the concrete is stressed to its permissible limit by the applied moment on the beam, reinforcing steel remaining under-stressed, that is, reinforcement used is more than necessary, this state is called the *over-reinforcement*. The opposite phenomenon is called the *under-reinforcement*. When both the concrete and steel are stressed to their allowable limiting values simultaneously, that state is known as the *balanced reinforcement*.

Question 6.3: What is bond stress in a reinforced cement concrete? Find an expression of bond stress.

Answer:

When a reinforced cement concrete beam undergoes the action of bending moment the sliding between the concrete and steel is resisted by a force on the surface along the steel bars. This force yields a stress on the surface of the steel bars, called the *bond stress*. Bond stress is equal to the force divided by the surface area of the reinforcing bars per unit length.

Bond stress in a reinforced cement concrete beam can be obtained by using the equation of shearing stress in a homogeneous beam. From Equation (4.18) the expression of shearing stress for a homogeneous straight beam,

$$\tau = \frac{VQ}{Ib} \qquad (4.18)$$

Now to make this equation applicable for an equivalent concrete beam section as shown in Figure 6.4a, first moment of area Q is obtained as,

$$Q = \bar{y}\int dA = (d - kd)nA_s \qquad (6.15)$$

where,

$\bar{y} = (d - kd)$ = Distance between neutral axis and centerline of reinforcing steel

$\int dA = nA_s$ = Concrete equivalent area of steel

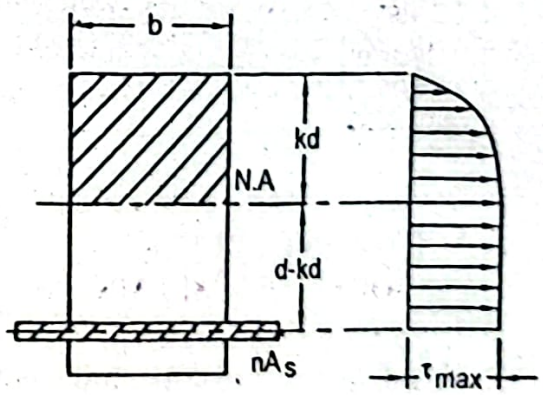

(a) (b)

Figure 6.4: Shear Stress Distribution in an Equivalent Concrete Section.

Width b in Equation (4.18) is the effective width of the reinforcing bars, which is equivalent to the sum of the perimeters of the reinforcing bars and is denoted by Σo, i.e. is, $b = \Sigma o$.

To find the value of moment of inertia I the flexure formula from Equation (4.11) is used as,

$$\sigma = \frac{My}{I} \qquad (4.$$

To use this equation for the equivalent concrete beam section,

$$y = (d - kd)$$

$$M = A_s f_s jd$$

$$\text{and } \sigma = \frac{f_s}{n}$$

Substituting these values in Equation (4.11) and rearranging one obtains,

$$I = nA_s(d - kd)(jd) \qquad (6.1$$

From Equations (4.18), (6.15) and (6.16) one finds the expression of the bond stress as,

$$\tau_b = \frac{V}{jd\Sigma o} \qquad (6.1$$

Shearing stress at the neutral axis is obtained in the similar way by using the values of $($ and I from Equations (6.15) and (6.16) respectively. Shearing stress at the neutral axis i maximum and its expression becomes,

$$\tau_{max} = \frac{VnA_s(d - kd)}{bnA_s(d - kd)\,jd} = \frac{V}{jdb} \qquad (6.18$$

It is observed from Figure 6.4b that stress distribution for the equivalent rectangula concrete section is of parabolic nature above the neutral axis. Since above the neutral axis there is concrete only, it behaves like homogeneous material. On the other hand, the shearing stress remains constant below the neutral axis. If the bond stress and the shearing stress are obtained using Equations (6.17) and (6.18) respectively, the bond stress will be higher than the shearing stress, because the value of Σo is lower than that of the width b in Equation (6.18). In order to reduce the value of bond stress, the value of Σo should be increased, which can be done by using higher number of reinforcing bars of smaller diameters.

SOLVED PROBLEMS

Problem P6.1:

A timber beam as shown in Figure P6.1 is reinforced at the top and bottom by steel plates of $12mm$ thickness. Allowable stresses in timber and steel are respectively $10MPa$ and $135MPa$. Determine the width of the steel plates to resist a bending moment of $60kNm$. Assume $n = 15$.

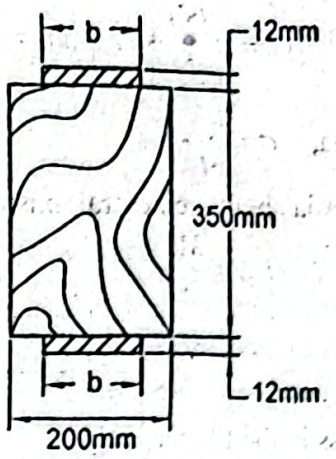

Figure P6.1

Given Data:

Width of beam $= 200mm$

Depth of beam $= 350mm$

Thickness of steel plate $= 12mm$

Resisting moment, $M = 60kNm$

Allowable stress in timber, $\sigma_t = 10MPa$

Allowable stress in steel, $\sigma_s = 135MPa$

Ratio of moduli of elasticity, $n = 15$

To Find:

- Width of steel plate, b

Solution:

Composite section and its equivalent timber section are shown in the figure below.

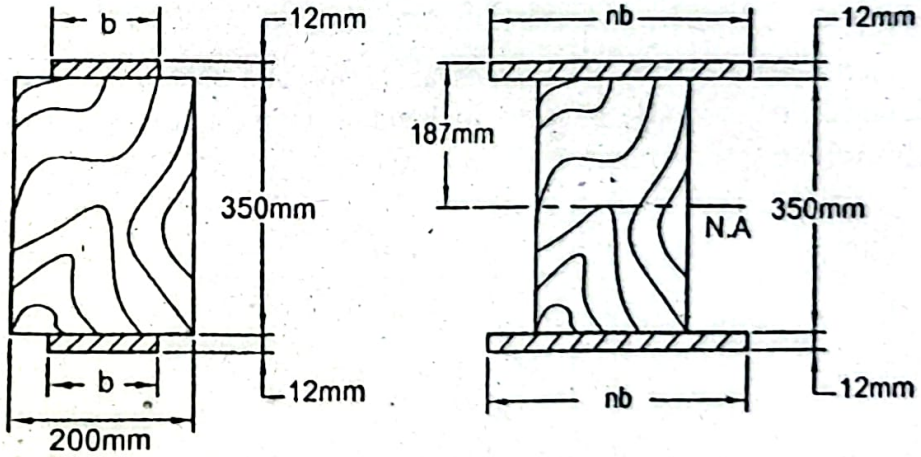

Composite section Equivalent timber section

Considering the limiting stress in steel, the maximum stress in the timber equivalent of steel,

$$\sigma_t = \frac{\sigma_s}{n} = \frac{135}{15} MPa = 9MPa$$

Distance of the outer fiber from the neutral axis,

We have from flexure formula, $\sigma = \frac{Mc}{I}$

Therefore, the moment pf inertia about the neutral axis can be written as,

$$I_{NA} = \frac{Mc}{\sigma_t}$$

$$= \frac{60 \times 10^6 \times 187}{9} mm^4 = 12.47 \times 10^8 mm^4$$

Considering the limiting stress in the timber,

$$I_{NA} = \frac{Mc}{\sigma_t}$$

$$= \frac{60 \times 10^6 \times \frac{350}{2}}{10} mm^4 = 10.50 \times 10^8 mm^4$$

Choosing higher of the two values,

$$I_{NA} = 12.47 \times 10^8 mm^4$$

We have the moment of inertia of equivalent timber section about the neutral axis,

$$I_{NA} = \frac{1}{12} \times 200 \times 350^3 + 2\left[\frac{1}{12} \times 15b \times 12^3 + (15b \times 12) \times \left(\frac{350}{2} + 6\right)^2\right]$$

From Equations (i) and (ii) we find,

$$12.47 \times 10^8 = \frac{1}{12} \times 200 \times 350^3 + 2\left[\frac{1}{12} \times 15b \times 12^3 + (15b \times 12) \times 181^2\right]$$

or, $b = 45.13mm$ **Answer**

Problem P6.2:

A timber beam is reinforced by steel plates at the top and bottom as shown in F P6.2. Determine the percentage increase in bending moment due to reinforcemer $n = 15$. Allowable stresses in timber and steel are respectively $10MPa$ and $135MPa$

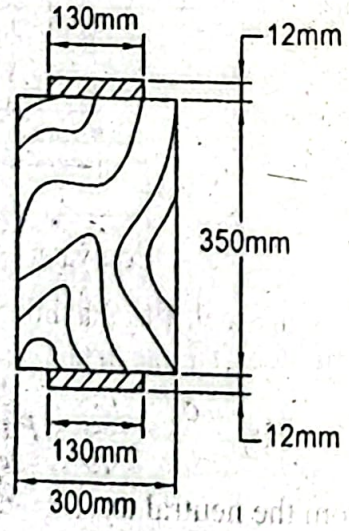

Figure P6.2

Given Data:

Width of beam $= 300mm$

Depth of beam $= 350mm$

Thickness of steel plate $= 12mm$

Width of steel plate, $b = 130mm$

Allowable stress in timber, $\sigma_t = 10MPa$

Allowable stress in steel, $\sigma_s = 135MPa$

Ratio of moduli of elasticity, $n = 15$

To Find:

Percentage increase in bending moment due to reinforcement

Solution:

Composite section and its equivalent timber section are shown in the figure below.

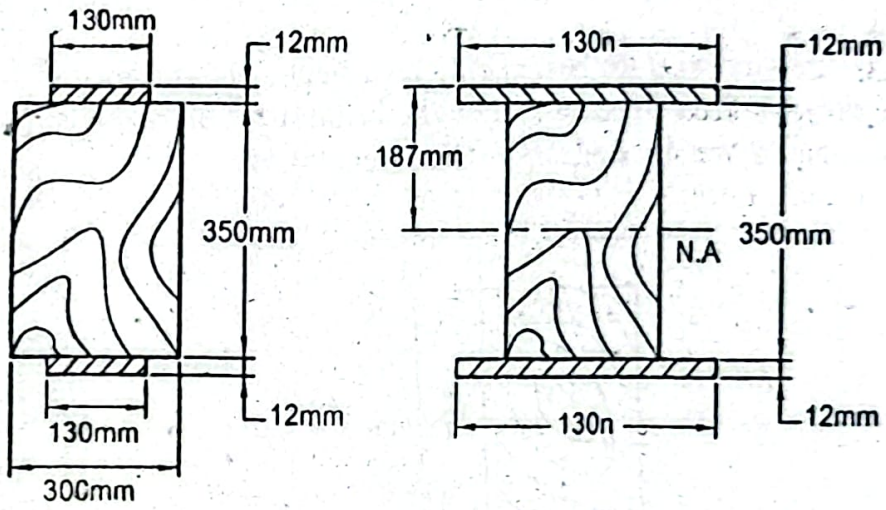

Composite section Equivalent timber section

Resisting moment when only the timber exists,

$$M = \frac{\sigma I}{c} = \frac{\sigma_t I_{NA}}{c}$$

Moment of inertia about the neutral axis, when only the timber exists,

$$I_{NA} = \frac{1}{12} \times 300 \times 350^3 mm^4 = 10.72 \times 10^8 mm^4$$

Distance of the outer fiber from the neutral axis,

$$c = \frac{350}{2} mm = 175mm$$

Therefore, $$M = \frac{10 \times 10.72 \times 10^8}{175} kNm = 61.26kNm$$

Including the steel plates, the moment of inertia about the neutral axis,

$$I_{NA} = \frac{1}{12} \times 300 \times 350^3 + 2\left[\frac{1}{12} \times (130 \times 15) \times 12^3 + (130 \times 15 \times 12) \times \left(\frac{350}{2} + 6\right)^2\right]$$

$$= 26.06 \times 10^8 mm^4$$

Maximum stress in the timber equivalent of steel,

$$\sigma_t = \frac{\sigma_s}{n} = \frac{135}{15} MPa = 9MPa$$

Therefore, the resisting moment including the steel plates,

$$M = \frac{\sigma_t I_{NA}}{c}$$

Distance of the outer fiber, $c = \left(\frac{350}{2} + 12\right) mm = 187mm$

Resisting moment, $M = \frac{9 \times 26.06 \times 10^6}{187} kNm = 125.42kNm$

Therefore, the percentage increase in the bending moment due to reinforcement,

$$= \frac{125.42 - 61.26}{61.26} \times 100$$

$$= 104.73 \text{ Answer}$$

Problem P6.3:

A timber beam is reinforced at the bottom only by a steel plate as shown in Figu
Determine the moment that can be resisted by the beam if the allowable stress in $\sigma_t = 8MPa$ and that in steel $\sigma_s = 125MPa$. Consider $n = 15$.

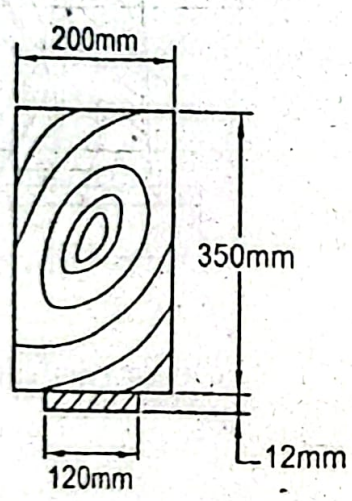

Figure P6.3

Given Data:

Width of beam = *200mm*
Depth of beam = *350mm*
Thickness of plate = *12mm*
Width of steel plate, $b = 120mm$
Allowable stress in timber, $\sigma_t = 8MPa$
Allowable stress in steel, $\sigma_s = 125MPa$
Ratio of moduli of elasticity, $n = 15$

To Find:

- Resisting moment, M

Solution:

Composite section and its equivalent timber section are shown in the figure below.

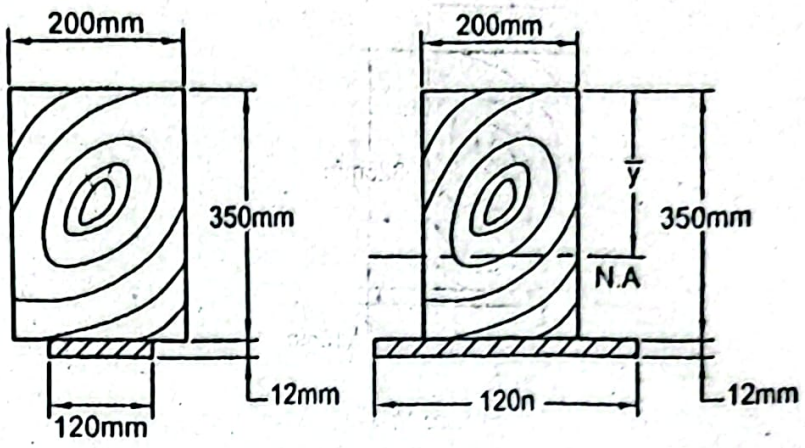

Composite section Equivalent timber section

To find the neutral axis $\bar{y}$ from the top fiber,

$$A\bar{y} = \sum Ay$$

or, $(200\times350+120\times15\times12)\bar{y} = (350\times200)\frac{350}{2}+(120\times15\times12)\times\left(350+\frac{12}{2}\right)$

or, $\bar{y} = 217.68mm$

Moment of inertia about the neutral axis,

$$I_{NA} = \frac{1}{12}\times200\times350^3+(200\times350)\times\left(217.68-\frac{315}{2}\right)^2+$$

$$\frac{1}{12}\times120\times15\times12^3+(120\times15\times12)\times\left(350-217.68+\frac{12}{2}\right)$$

$$= 12.56\times10^8 mm^4$$

Maximum resisting moment on the top fiber,

$$M = \frac{\sigma_t I_{NA}}{c} = \frac{8\times12.56\times10^8}{217.68}kNm = 46.16kNm$$

Maximum stress in the timber equivalent of steel at the bottom fiber,

$$\sigma_t = \frac{\sigma_s}{n} = \frac{125}{15}MPa = 8.33MPa$$

Therefore, the maximum resisting moment at the bottom fiber,

$$M = \frac{\sigma_t I_{NA}}{c} = \frac{8.33\times12.56\times10^8}{144.32}kNm = 72.50kNm$$

Choosing smaller of two values, the required resisting moment,

$M = 46.16kNm$ *Answer*

Problem P6.4:

A timber beam is reinforced at the bottom only by a steel plate as shown in Figure P6.4. Determine the width of the steel plate such that the maximum stresses in timber and steel reach respectively to the limiting values of $10MPa$ and $120MPa$ simultaneously. Use $n = 15$.

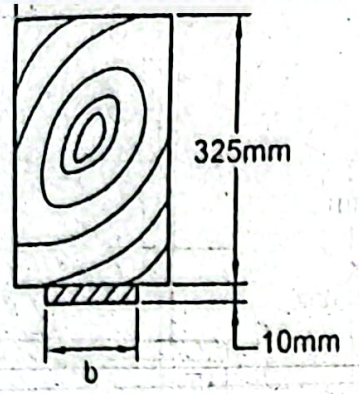

Figure P6.4

Given Data:

Width of beam $= 250mm$

Depth of beam $= 325mm$

Thickness of plate $= 10mm$

Allowable stress in timber, $\sigma_t = 10MPa$

Allowable stress in steel, $\sigma_s = 120MPa$

Ratio of moduli of elasticity, $n = 15$

To Find:

- Width of steel plate, b

Solution:

Composite section and its equivalent timber section are shown in the figure below.

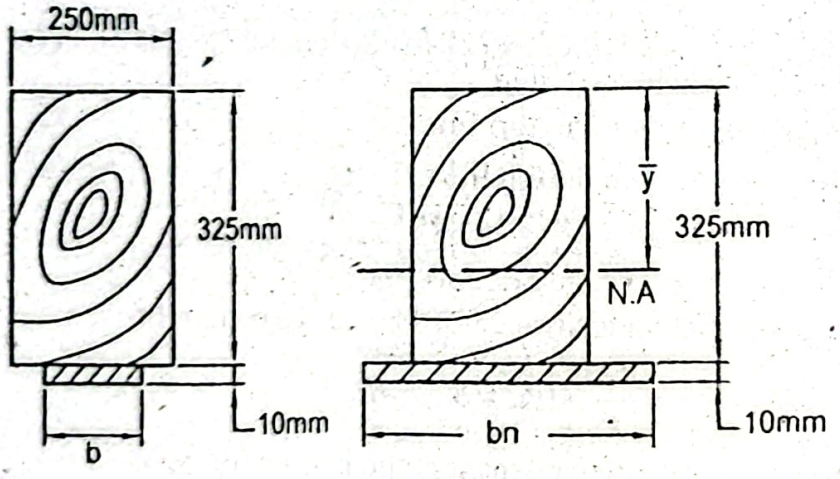

Composite section Equivalent timber section

We have flexure stress, $\sigma = \dfrac{Mc}{I}$

Therefore, the moment of inertia about the neutral axis,

$$I_{NA} = \frac{Mc}{\sigma}$$

Considering the top fiber, $I_{NA} = \dfrac{Mc}{\sigma_t}$

$$\text{or, } I_{NA} = \frac{M \times \bar{y}}{10} \qquad (i)$$

Maximum stress in the timber equivalent of steel,

$$\sigma_t = \frac{\sigma_s}{n} = \frac{120}{15} MPa = 8MPa$$

Therefore,

$$I_{NA} = \frac{Mc}{\sigma_t} = \frac{M \times (325 - \bar{y} + 10)}{8}$$

$$\text{or, } I_{NA} = \frac{M \times (335 - \bar{y})}{8} \qquad (ii)$$

Balancing Equations (i) and (ii),

$$\frac{M \times \bar{y}}{10} = \frac{M \times (335 - \bar{y})}{8}$$

$$\text{or, } 0.8\bar{y} = 335 - \bar{y}$$

$$\text{or, } \bar{y} = 186.11mm$$

We have, $A\bar{y} = \sum Ay$

$$\text{or, } (250 \times 325 + b \times 15 \times 10)\bar{y} = (250 \times 325) \times \frac{325}{2} + (b \times 15 \times 10)\left(325 + \frac{10}{2}\right)$$

$$\text{or, } (250 \times 325 + 150b)186.11 = (250 \times 325) \times 162.5 + 150b \times 330$$

$$\text{or, } b = 88.88mm \text{ Answer}$$

Problem P6.5:

A simply supported beam reinforced at the top and bottom by the steel plates as shown in Figure P6.5, carries a uniformly distributed load of $25kN/m$ over its entire span of $5m$. If $n = 15$, determine the maximum stresses in timber and steel.

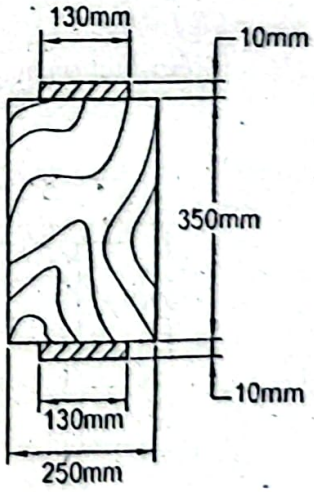

Figure P6.5

Given Data:

Width of beam = $250mm$

Depth of beam = $350mm$

Thickness of steel plate = $10mm$

Width of steel plate, $b = 250mm$

Span of beam, –
Distributed load, $w = 25kN/m$
Ratio of moduli of elasticity, $n = 15$

To Find:

- Maximum stress in timber, σ_t
- Maximum stress in steel, σ_s

Solution:

Free body diagram of the entire beam is shown in the following figure.

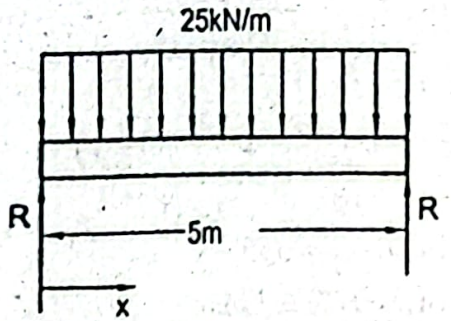

Due to symmetry reaction at both the ends of the simply supported beam is same.

Therefore, reaction, $$R = \frac{wL}{2} = \frac{25 \times 5}{2} kN = 62.5kN$$

Bending moment at any distance x,

$$M = Rx - \frac{wx^2}{2}$$

Maximum bending moment occurs at the mid-section of the beam.

That is, at $x = \frac{L}{2} = \frac{5}{2} m = 2.5m$

Therefore, the bending moment, $$M = 62.5 \times 2.5 - \frac{25 \times (2.5)^2}{2}$$

$$= 78.13kNm$$

Composite section and its equivalent timber section are shown in the figure below.

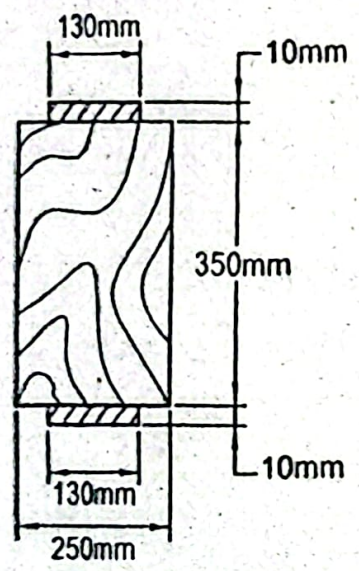

Composite section

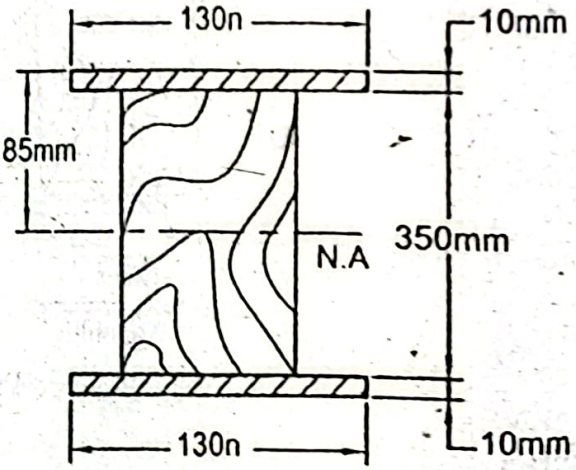

Equivalent timber section

Maximum stress in the timber equivalent of steel,

$$\sigma_t = \frac{Mc}{I} = \frac{Mc}{I_{NA}}$$

Moment of inertia about the neutral axis,

$$I_{NA} = \frac{1}{12} \times 250 \times 350^3 + 2\left[\frac{1}{12} \times (130 \times 15) \times 10^3 + (130 \times 15 \times 10)\left(\frac{350}{2} + 5\right)^2\right]$$

$$= 21.57 \times 10^8 \, MPa$$

Therefore, $$\sigma_t = \frac{78.13 \times 10^6 \times 185}{21.57 \times 10^8} MPa = 6.7 MPa$$

Maximum stress in the steel, $\sigma_s = \sigma_t \times n = 6.7 \times 15 MPa = 100.5 MPa$ ***Answer***

Maximum stress in the timber, $\sigma_t = \frac{Mc}{I_{NA}} = \frac{78.13 \times 10^6 \times \frac{350}{2}}{21.57 \times 10^8} MPa = 6.34 MPa$ ***Answer***

Problem P6.6:

A composite beam is fabricated from three materials as shown in Figure P6.6. Each of the materials is securely fastened together to avoid relative movement between them. Determine the maximum resisting moment if $\sigma_s \le 125MPa$, $\sigma_a \le 80MPa$, $\sigma_t \le 10MPa$ and $E_s = 200GPa$, $E_a = 70GPa$, $E_t = 10GPa$.

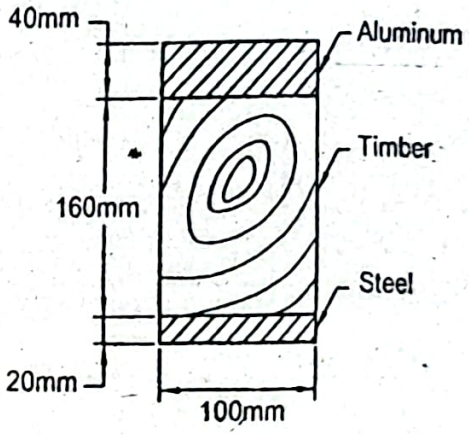

Figure P6.6

Given Data:

Width of beam, $b = 100mm$

Thickness of aluminum plate $= 40mm$

Depth of timber $= 160mm$

Thickness of steel plate $= 20mm$

Allowing stress in steel, $\sigma_s \le 125MPa$

Allowing stress in aluminum, $\sigma_a \le 80MPa$

Allowing stress in timber, $\sigma_t \le 10MPa$

Modulus of elasticity of steel, $E_s = 200GPa$

Modulus of elasticity of aluminum, $E_a = 70GPa$

To Find:

- Maximum resisting moment, M

Solution:

Composite section and its equivalent timber section for aluminum and steel ar the figure below.

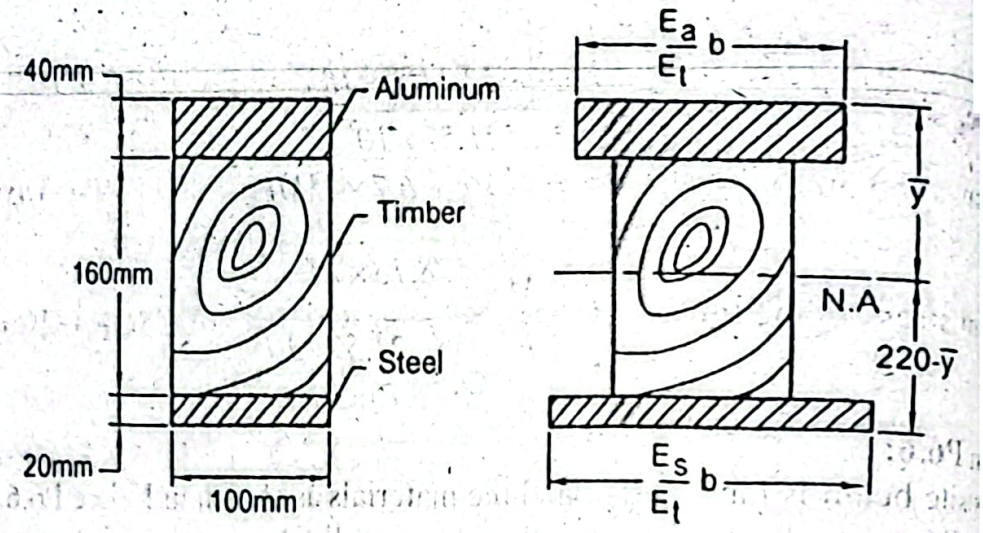

Composite section Equivalent timber section

Width (timber equivalent of aluminum),

$$(E_a / E_t) \times b = (70/10) \times 100mm = 700mm$$

Width (timber equivalent of steel),

$$(E_s / E_t) \times b = (200/10) \times 100mm = 2000mm$$

Now to find the distance of the neutral axis from the top fiber,

$$A\bar{y} = \sum Ay$$

or,

$$(700 \times 40 + 100 \times 160 + 2000 \times 20)\bar{y} = 700 \times 40 \times 20 + 100 \times 160 \times 120 + 2000 \times 20$$

or, $\bar{y} = 129.52mm$

Moment of inertia of the equivalent timber section about the neutral axis,

$$I_{NA} = \frac{1}{12} \times 700 \times 40^3 + 700 \times 40 \times (129.52 - 20)^2$$
$$+ \frac{1}{12} \times 100 \times 160^3 + 100 \times 160 \times (129.52 - 120)^2$$
$$+ \frac{1}{12} \times 2000 \times 20^3 + 2000 \times 20 \times (210 - 129.52)^2$$
$$= 6.36 \times 10^8 mm^4$$

To find the maximum resisting moment based on the top fiber,

$$M = \frac{\sigma_t I_{NA}}{c}$$

Maximum stress in the timber equivalent of aluminum,

$$\sigma_t = \frac{\sigma_a}{(E_a / E_t)} = \frac{80}{(70/10)} MPa = 11.43MPa$$

ierefore, $$M = \frac{11.43 \times 636 \times 10^6}{129.52} = 56.13kNm$$

ow we shall have to find the maximum resisting moment based on the bottom fiber.
ıximum stress in the timber equivalent of steel,

$$\sigma_t = \frac{\sigma_s}{(E_s / E_t)} = \frac{125}{(200/10)} MPa = 6.25MPa$$

erefore, $$M = \frac{6.25 \times 6.36 \times 10^6}{90.48} kNm = 43.93kNm$$

w let us find the resisting moment considering the limiting stress of timber.
tance at the interface of aluminum is higher and it is $89.52mm$.

refore, $$M = \frac{10 \times 6.36 \times 10^6}{89.52} kNm = 71.05kNm$$

v considering the lowest of the three values, the required maximum resisting moment,

$M = 43.93kNm$ *Answer*

blem P6.7:

omposite beam is fabricated from three materials as shown in Figure P6.7. The rials are securely fastened together to avoid relative movement between them, rmine the maximum resisting bending moment if $\sigma_s \le 130MPa$, $\sigma_c \le 100MPa$, $80MPa$ and $E_s = 200GPa$, $E_c = 120GPa$, $E_a = 70GPa$.

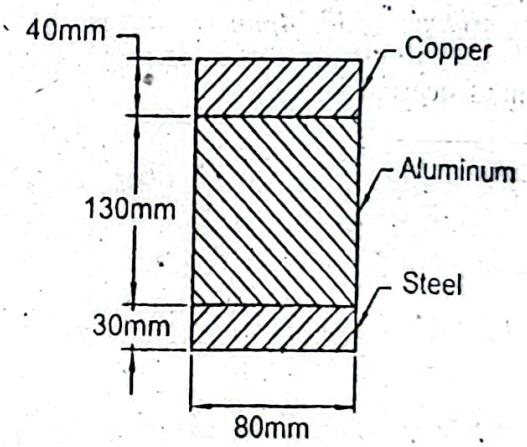

Figure P6.7

Data:

of beam, $b = 80mm$
ess of copper plate $= 40mm$
ess of steel plate $= 30mm$
ess of aluminum plate $= 130mm$
ıg stress in steel, $\sigma_s \le 130MPa$
ıg stress in copper, $\sigma_c \le 100MPa$
g stress in aluminum, $\sigma_a \le 80MPa$
s of elasticity of steel, $E_s = 200GPa$
s of elasticity of copper, $E_c = 120GPa$

To Find:

- Maximum resisting moment, M

Solution:

Composite section and its equivalent aluminum section are shown in the figur

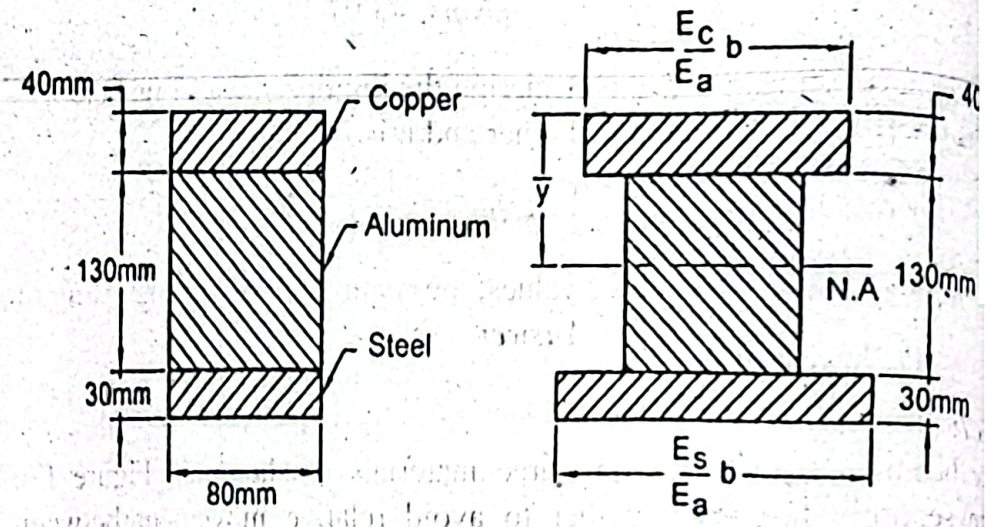

Composite section Equivalent aluminum section

Width (aluminum equivalent of copper),

$$(E_c / E_a)b = \frac{120}{70} \times 80mm = 137.14mm$$

Width (aluminum equivalent of steel),

$$(E_s / E_a)b = \frac{200}{70} \times 80mm = 228.57mm$$

Now to find the distance of the neutral axis from the top fiber,

$$A\bar{y} = \sum Ay$$

$$\text{or, } (137.14 \times 40 + 80 \times 130 + 228.57 \times 30)\bar{y}$$

$$= 137.14 \times 40 \times 20 + 80 \times 130 \times 105 + 228.57 \times 30 \times 185$$

$$\text{or, } \bar{y} = 108.62mm$$

Moment of inertia of the equivalent aluminum section about the neutral axis,

$$I_{NA} = \frac{1}{12} \times 137.14 \times 40^3 + 137.14 \times 40 \times (108.62 - 20)^2$$

$$+ \frac{1}{12} \times 80 \times 130^3 + 80 \times 130 \times (108.62 - 105.0)^2$$

$$+ \frac{1}{12} \times 228.57 \times 30^3 + 228.57 \times 30 \times (185 - 108.62)^2$$

$$= 99.11 \times 10^6 mm^4$$

To find the maximum resisting moment based on the top fiber,

$$M = \frac{\sigma_a I_{NA}}{c}$$

Maximum stress in the aluminum equivalent of copper,

$$\sigma_a = \frac{\sigma_c}{(E_c / E_a)} = \frac{100}{120/70} MPa = 58.33MPa$$

Therefore, $$M = \frac{58.33 \times 99.11 \times 10^6}{108.62} MPa = 53.22kNm$$

Now the maximum resisting moment based on the bottom fiber will be obtained.
Maximum stress in the aluminum equivalent of steel.

$$\sigma_a = \frac{\sigma_s}{(E_s / E_a)} = \frac{130}{200/70} MPa = 45.5MPa$$

Therefore, $$M = \frac{45.5 \times 99.11 \times 10^6}{91.38} MPa = 49.35kNm$$

The maximum resisting moment considering the limiting stress of aluminum will be found now.
Here the distance of the interface of copper is higher and it is $68.62mm$.

Therefore, $$M = \frac{80 \times 99.11 \times 10^6}{68.62} kNm = 115.55kNm$$

Now considering the lowest of the three values the required maximum resisting moment,

$$M = 49.35kNm \text{ Answer}$$

Problem P6.8:
Two steel plates of thickness $8mm$ are securely fastened with an aluminum beam of depth $75mm$ and width $50mm$ as shown in Figure P6.8. Determine the maximum stresses developed in aluminum and steel if the beam is to resist a bending moment of $5kNm$. Consider $E_s = 200GPa$ and $E_a = 70GPa$.

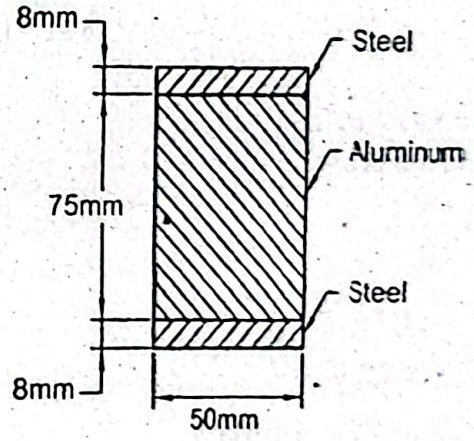

Figure P6.8

Given Data:
Width of beam, $b = 50mm$
Depth of aluminum beam $= 75mm$
Thickness of steel plate $= 8mm$
Resisting moment, $M = 5kNm$
Modulus of elasticity of steel, $E_s = 200GPa$
Modulus of elasticity of aluminum, $E_a = 70GPa$

To Find:

- Maximum stress in aluminum, σ_a
- Maximum stress in steel, σ_s

Solution:

Composite section and its equivalent aluminum section are shown in the figure below

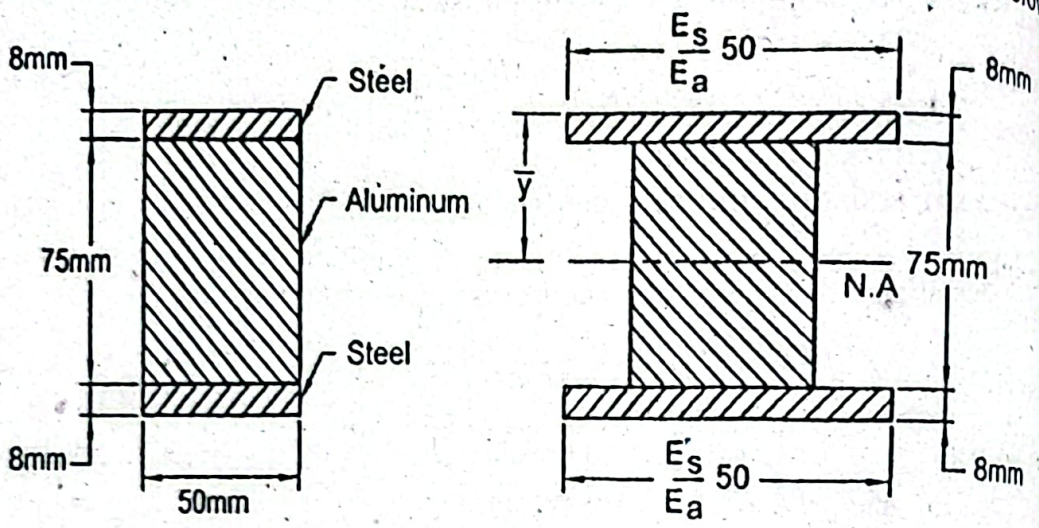

Composite section Equivalent aluminum section

Width, $$\left(\frac{E_s}{E_a}\right)50 = \frac{200}{70} \times 50mm = 142.86mm$$

Due to symmetry the neutral axis lies at the middle of the section.

Moment of inertia of the equivalent aluminum section about the neutral axis,

$$I_{NA} = \frac{1}{12} \times 50 \times 75^3 + 2\left[\frac{1}{12} \times 142.86 \times 8^3 + 142.86 \times 8 \times \left(\frac{75}{2} + 4\right)\right.$$

$$= 5.71 \times 10^6 \, mm^4$$

Maximum stress in the aluminum beam,

$$\sigma_a = \frac{Mc}{I_{NA}}$$

$$= \frac{5 \times 10^6 \times \frac{75}{2}}{5.71 \times 10^6} MPa$$

$$= 32.84MPa \ \ Answer$$

Now the maximum stress in the steel plate will be obtained.

Maximum stress in the aluminum equivalent of steel,

$$\sigma_a = \frac{Mc}{I_{NA}}$$

$$= \frac{5 \times 10^6 \times \left(\frac{75}{2} + 8\right)}{5.71 \times 10^6} MPa$$

$$= 39.84MPa$$

Therefore, the maximum stress in the steel plate,

$$\sigma_s = \left(\frac{E_s}{E_a}\right) \times \sigma_a$$

$$= \left(\frac{200}{70}\right) \times 39.84\,MPa$$

$$= 113.83MPa \text{ Answer}$$

Problem P6.9:

A composite beam is fabricated from the steel and aluminum plates as shown in Figure P6.9. They are securely fastened together to avoid relative movement between them. Determine the maximum stresses in aluminum and steel, if the beam resists a bending moment of $500Nm$. Consider $E_s = 200GPa$ and $E_a = 70GPa$.

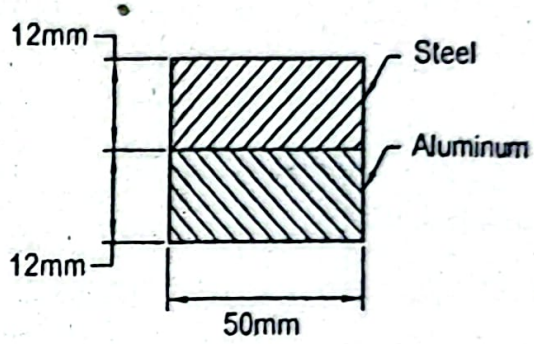

Figure P6.9

Given Data:

Width of beam, $b = 50mm$

Thickness of steel plate $= 12mm$

Thickness of aluminum plate $= 12mm$

Resisting moment, $M = 500Nm$

Modulus of elasticity of steel, $E_s = 200GPa$

Modulus of elasticity of aluminum, $E_a = 70GPa$

To Find:

- Maximum stress in aluminum, σ_a
- Maximum stress in steel, σ_s

Solution:

Composite section and its equivalent aluminum section are shown in the figure below.

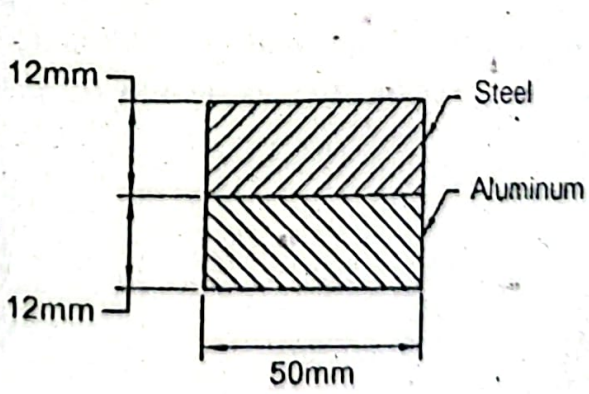

Composite section

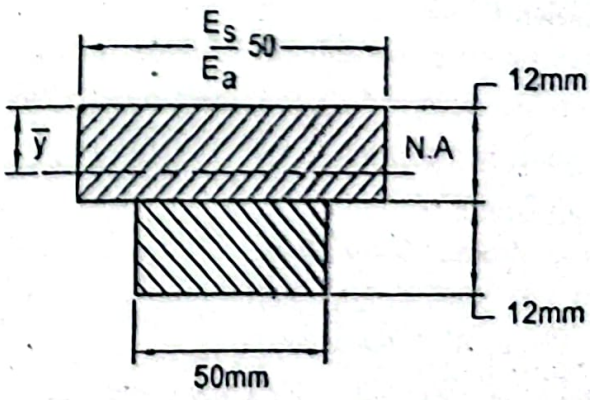

Equivalent aluminum section

Width, $\left(\frac{E_s}{E_a}\right)50 = \frac{200}{70} \times 50mm = 142.86mm$

To find the distance of the neutral axis in the equivalent section from the top fiber,

$$A\bar{y} = \sum Ay$$

$$\text{or, } (142.86 \times 12 + 50 \times 12)\bar{y} = 142.86 \times 12 \times 6 + 50 \times 12 \times$$

$$\text{or, } \bar{y} = 9.11mm$$

Moment of inertia of the equivalent aluminum section with respect to the neutral axis

$$I_{NA} = \frac{1}{12} \times 142.86 \times 12^3 + (142.86 \times 12) \times (9.11 - 6)^2$$

$$+ \frac{1}{12} \times 50 \times 12^3 + 50 \times 12 \times (18 - 9.11)^2$$

$$= 91772.17mm^4$$

Maximum stress in the aluminum plate,

$$\sigma_a = \frac{Mc}{I_{NA}}$$

$$= \frac{500 \times 10^3 \times (24 - 9.11)}{91772.17} MPa = 81.12MPa \text{ Answe}$$

Now the maximum stress in the steel plate will be obtained.

Maximum stress in the aluminum equivalent of steel,

$$\sigma_a = \frac{Mc}{I_{NA}}$$

$$= \frac{500 \times 10^3 \times 9.11}{91772.17} MPa = 49.63MPa$$

Therefore, the maximum stress in the steel plate,

$$\sigma_s = \left(\frac{E_s}{E_a}\right)\sigma_a$$

$$= \left(\frac{200}{70}\right) \times 49.63MPa = 141.80MPa \text{ Answer}$$

- **ProblemP6.10:**

For a bending moment of $250kNm$ in a reinforced concrete beam with $b = 400m$ $d = 600mm$, $A_s = 5000mm^2$ and $n = 8$, determine the maximum stresses developed the concrete and steel.

Given Data:

Width of beam, $b = 400mm$

Depth of beam, $d = 600mm$

Steel area, $A_s = 5000mm^2$

Bending moment, $M = 250kNm$

Ratio of moduli of elasticity, $n = 8$

Find:

Maximum stress in concrete, f_c

Maximum stress in steel, f_s

olution:

quivalent concrete section of the beam is shown in the figure below.

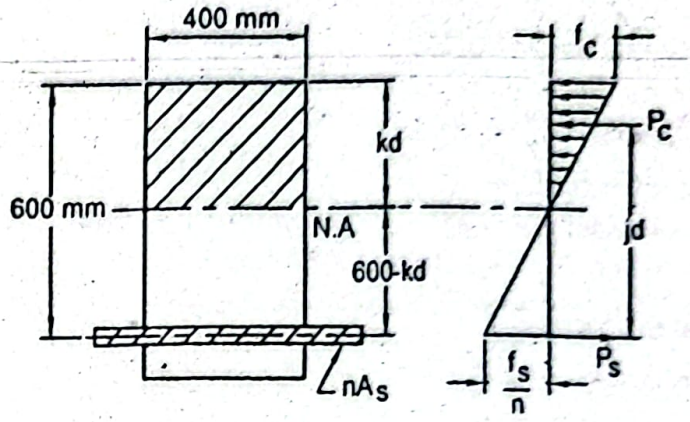

uivalent concrete area of steel $= nA_s = 8 \times 5000mm^2 = 40{,}000mm^2$

ce the moment of concrete area above the neutral axis is equal to the moment of ıcrete equivalent area of steel below the neutral axis,

$$b \times kd \times \frac{kd}{2} = nA_s(d - kd)$$

or, $400 \times kd \times \frac{kd}{2} = nA_s(600 - kd)$

or, $200 \times (kd)^2 = 40000(600 - kd)$

or, $(kd)^2 + 200kd - 120000 = 0$

or, $kd = \frac{-200 \pm \sqrt{200^2 + 4 \times 120000}}{2}$

or, $kd = 260.56mm$

n the above figure, $jd = \left(d - \frac{1}{3}kd\right) = \left(600 - \frac{260.56}{3}\right)mm = 513.15mm$

isting moment in terms of concrete,

$$M_c = \left(\frac{1}{2} f_c \times bkd\right)(jd)$$

or, $250 \times 10^6 = \frac{1}{2} \times f_c \times 400 \times 260.56 \times 513.15$

or, $f_c = 9.35MPa$ **Answer**

sting moment in terms of steel,

$$M_s = f_s A_s (jd)$$

or, $250 \times 10^6 = f_s \times 5000 \times 513.15$

or, $f_s = 97.44MPa$ **Answer**

Problem P6.11:
Determine the maximum stresses developed in the concrete and steel of a r
concrete beam by a bending moment of $100kNm$ if $b = 300mm$, $d =$
$A_s = 1800mm^2$ and $n = 8$.

Given Data:
Width of beam, $b = 300mm$
Depth of beam, $d = 450mm$
Steel area, $A_s = 1800mm^2$
Bending moment, $M = 100kNm$
Ratio of moduli of elasticity, $n = 8$

To Find:
- Maximum stress in concrete, f_c
- Maximum stress in steel, f_s

Solution:
Equivalent concrete section of the beam is shown in the figure below.

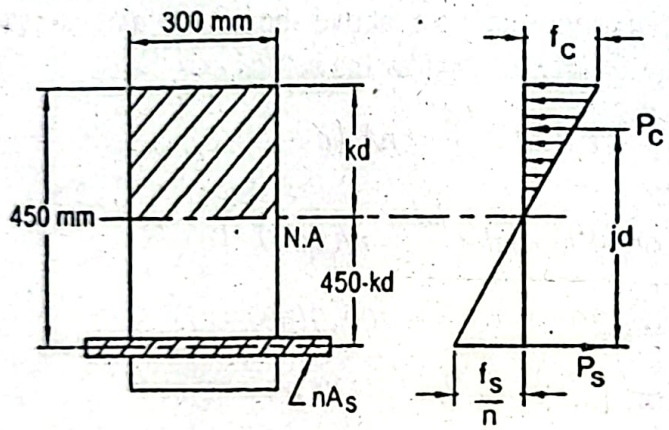

Equivalent concrete area of steel $= nA_s = 8 \times 1800mm^2 = 14400mm^2$
Since the moment of concrete area above the neutral axis is equal to the mo
concrete equivalent area of steel below the neutral axis,

$$b \times kd \times \frac{kd}{2} = nA_s(d - kd)$$

$$\text{or, } \frac{300}{2} \times (kd)^2 = 14400(450 - kd)$$

$$\text{or, } (kd)^2 + 96kd - 43200 = 0$$

$$\text{or, } kd = \frac{-96 \pm \sqrt{96^2 + 4 \times 43200}}{2}$$

$$\text{or, } kd = 165.32mm$$

From the above figure, $jd = \left(450 - \frac{kd}{3}\right) = \left(450 - \frac{165.32}{3}\right)mm = 394.89mm$

Resisting moment in terms of concrete,

$M_c = \left(2 f_c bkd\right)(jd)$

or, $100 \times 10^6 = \frac{1}{2} \times f_c \times 300 \times 165.32 \times 394.89$

or, $f_c = 10.21 MPa$ **Answer**

sisting moment in terms of steel,

$$M_s = (f_s A_s)(jd)$$

or, $100 \times 10^6 = f_s \times 1800 \times 394.89$

or, $f_s = 140.69 MPa$ **Answer**

oblem P6.12:

termine the applied bending moment and the steel area needed for a reinforced ncrete beam when the maximum stresses developed in concrete and steel are $= 10MPa$ and $f_s = 150MPa$ respectively. Depth of beam $d = 450mm$, width of beam $250mm$ and $n = 8$.

en Data:

dth of beam, $b = 250mm$

pth of beam $d = 400mm$

ximum stress in concrete, $f_c = 10MPa$

imum stress in steel, $f_s = 150MPa$

o of moduli of elasticity, $n = 8$

Find:

nding moment, M

el area, A_s

tion:

ivalent concrete section of the beam is shown in the figure below.

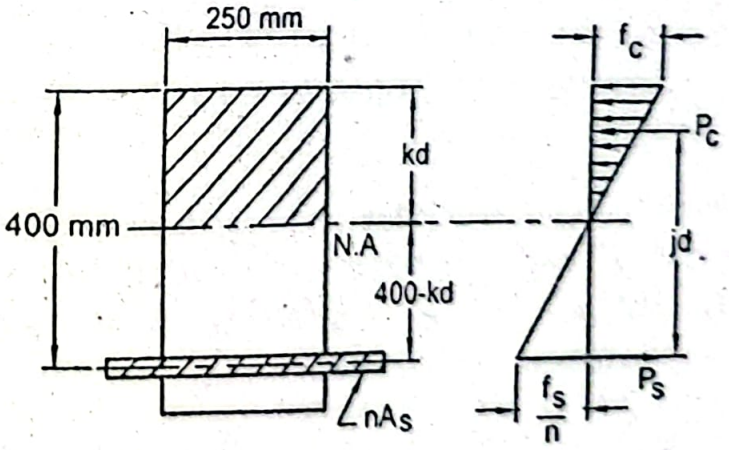

ting moment in terms of concrete,

$$M_c = \left(\frac{1}{2} f_c bkd\right)(jd)$$

$$= \frac{1}{2} \times 10 \times 250 \times (kd) \times (jd)$$

Resisting moment in terms of steel,

$$M_s = f_s A_s (jd)$$

$$= 150 \times A_s (jd)$$

Now balancing Equations (i) and (ii),

$$150 A_s (jd) = \frac{1}{2} \times 10 \times 250 \times (kd)(jd)$$

or, $A_s = 8.33kd$

Since the moment of concrete area above the neutral axis is equal to the concrete equivalent area of steel below the neutral axis,

$$(bkd)\left(\frac{kd}{2}\right) = nA_s (d - kd)$$

or, $$\frac{250}{2}(kd)^2 = 8 \times A_s (400 - kd)$$

Substituting the value of A_s from Equation (iii),

$$125(kd)^2 = 8 \times 8.33kd(400 - kd)$$

or, $kd = 139.09mm$

Substituting this value in Equation (iii),

$$A_s = 8.33 \times 139.09mm^2 = 1159mm^2 \quad \textbf{Answer}$$

From the above figure, $jd = d - \frac{kd}{3}$

or, $$jd = 400 - \frac{139.09}{3}$$

or, $jd = 353.64mm$

Therefore, the required resisting moment,

$$M_s = 150 A_s (jd)$$

$$= 150 \times 1159 \times 353.64kNm = 61.48kNm \quad \textbf{Answer}$$

Problem P6.13:

Determine the maximum bending moment that can be applied in a reinforced c beam with $b = 300mm$, $d = 450mm$, $A_s = 1000mm^2$ and $n = 10$, if the allowable st concrete $f_c \leq 12MPa$ and that in steel $f_s \leq 140MPa$. Is the beam in reinforcement, over-reinforcement or balanced reinforcement?

Given Data:

Width of beam, $b = 300mm$

Depth of beam, $d = 450mm$

Steel area, $A_s = 1000mm^2$

Allowable stress in concrete, $f_c \leq 12MPa$

Allowable stress ...

Ratio of moduli of elasticity, $n = 10$

To Find:

- Maximum bending moment, M
- Whether beam is in under-reinforcement, over-reinforcement or balanced reinforcement

Solution:

Equivalent concrete section of the beam is shown in the figure below.

The moment of concrete area above the neutral axis is equal to the moment of concrete equivalent area of steel below the neutral axis, therefore,

$$(b \times kd)\frac{kd}{2} = nA_s(d - kd)$$

$$\text{or, } (300 \times kd)\frac{kd}{2} = 10 \times 1000(450 - kd)$$

$$\text{or, } (kd)^2 + 66.67kd - 30000 = 0$$

$$\text{or, } kd = \frac{-66.67 \pm \sqrt{66.67^2 + 4 \times 30000}}{2}$$

$$\text{or, } kd = 143.05mm$$

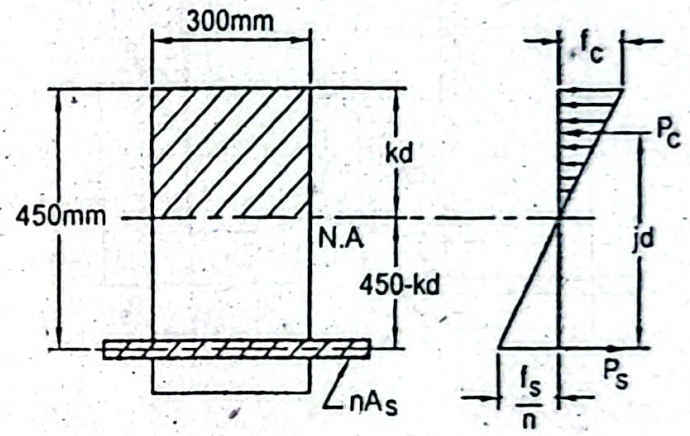

From the above figure, $jd = \left(d - \frac{kd}{3}\right) = \left(450 - \frac{143.05}{3}\right)mm = 402.32mm$

To reach the limiting stress in the concrete the bending moment,

$$M_c = \left(\frac{1}{2}f_c bkd\right)(jd)$$

$$= \frac{1}{2} \times 12 \times 300 \times 143.05 \times 402.32$$

$$= 103.59kNm$$

To reach the limiting stress in the steel the bending moment,

$$M_s = f_s A_s(jd) = 140 \times 1000 \times 402.32kNm = 56.32kNm$$

Now taking the smaller of the two values, the required bending moment,

$$M = 56.32kNm \text{ } \textit{Answer}$$

Steel will reach its limiting value of stress before that in the concrete. Therefore, the beam is in *under-reinforcement.*

Problem P6.14:

A maximum stress of $10MPa$ is developed in the concrete of a reinforced concrete b with $b = 300mm$, $d = 450mm$ and $n = 8$, when a bending moment of $100kNm$ applied. What stress is developed in the steel? What steel area is needed?

Given Data:

Width of beam, $b = 300mm$

Depth of beam, $d = 450mm$

Bending moment, $M = 100kNm$

Maximum stress in concrete, $f_c = 10MPa$

Ratio of moduli of elasticity, $n = 8$

To Find:

- Maximum stress developed in steel, f_s
- Steel area, A_s

Solution:

Equivalent concrete section of the beam is shown in the figure below.

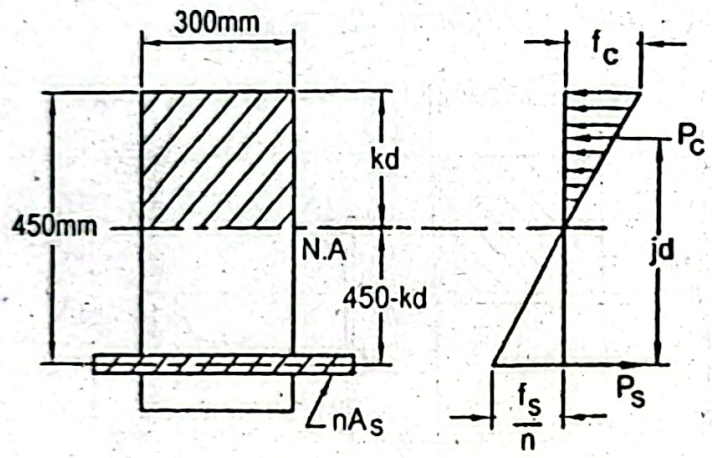

Resisting moment in terms of concrete,

$$M_c = \left(\frac{1}{2} f_c bkd\right)(jd)$$

$$\text{or, } 100\times10^6 = \left(\frac{1}{2}\times10\times300\times kd\right)\left(450-\frac{kd}{3}\right)$$

$$\text{or, } (kd)^2 - 1350kd + 200000 = 0$$

$$\text{or, } kd = \frac{1350 \pm \sqrt{1350^2 - 4\times200000}}{2}$$

$$\text{or, } kd = 169.41mm$$

Therefore, $$jd = \left(d - \frac{kd}{3}\right) = \left(450 - \frac{169.41}{3}\right)mm = 393.53mm$$

The moment of concrete area above the neutral axis is equal to the moment of conc equivalent area of steel below the neutral axis, therefore,

$$(b\times kd)\left(\frac{kd}{2}\right) = nA_s(450 - kd)$$

$$\text{or, } A_s = 1918mm^2 \text{ Answer}$$

Resisting moment in terms of steel,

$$M_s = f_s A_s (jd)$$

$$\text{or, } 100\times10^6 = f_s \times 1918 \times 393.53$$

$$\text{or, } f_s = 132.49MPa \text{ Answer}$$

Problem P6.15:

Determine the safe uniformly distributed load that can be applied on a simply supported reinforced concrete beam of span, $L = 4m, b = 300mm, d = 500mm, A_s = 1500mm^2$ and $n = 8$. Use the allowable stress in concrete $f_c \le 12MPa$ and that in steel $f_s \le 150MPa$. Consider $50mm$ of concrete below the reinforcing steel and include the weight of the beam. Density of concrete is $2410kg/m^3$.

Given Data:

Span of beam, $L = 4m$

Width of beam, $b = 300mm$

Depth of beam, $d = 500mm$

Steel area, $A_s = 1500mm^2$

Concrete below reinforcing steel $= 50mm$

Density of concrete, $\rho = 2410kg/m^3$

Allowable stress in concrete, $f_c \le 12MPa$

Allowable stress in steel, $f_s \le 150MPa$

Ratio of moduli of elasticity, $n = 8$

To Find:

- Uniformly distributed load, $w kN/m$

Solution:

Equivalent concrete section of the beam is shown in the figure below.

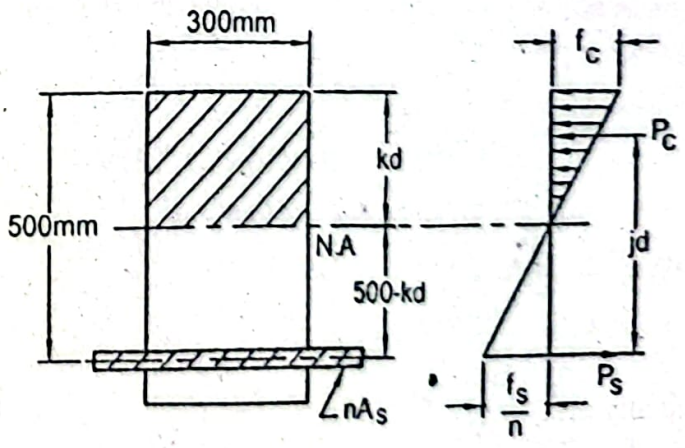

The moment of concrete area above the neutral axis is equal to the moment of concrete equivalent area of steel below the neutral axis, therefore,

$$(bkd)\frac{ka}{2} = nA_s(d - kd)$$

$$\text{or, } \frac{300\times(kd)^2}{2} = 8\times1500(500 - kd)$$

$$\text{or, } (kd^2) + 80kd - 40000 = 0$$

$$\text{or, } kd = \frac{-80 \pm \sqrt{80^2 + 4\times40000}}{2}$$

$$\text{or, } kd = 163.96mm$$

Moment area, $$jd = d - \frac{kd}{3} = 500 - \frac{163.96}{3} = 445.35mm$$

To reach the limiting stress in the concrete, the bending moment,

$$M_c = \left(\frac{1}{2} f_c bkd\right)(jd)$$

$$= \frac{1}{2}\times12\times300\times163.96\times445.35kNm = 131.44kNm$$

To reach the limiting stress in the steel, the bending moment,

$$M_s = f_s A_s(jd) = 150\times1500\times445.35kNm = 100.20kNm$$

Now taking the lower of the two values, the required bending moment,

$$M = 100.20kNm$$

Free body diagram of the entire beam is shown in the figure below.

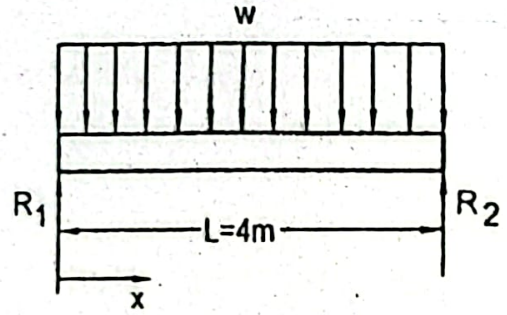

Weight of the beam is uniformly distributed throughout the span of the beam. Denc w_c as the weight of beam per unit length,

$$w_c = 1\times A\times\rho$$

$$= 1\times300\times(500+50)\times10^{-6}\times2410$$

$$= 397.65kg/m = 3.9kN/m$$

Total distributed load, $$w_t = (w_c + w)kN/m$$

Due to symmetry reaction, $$R_1 = R_2 = R$$

Reaction, $$R = \frac{w_t\times L}{2}kN$$

Bending moment at any distance x,

$$M_x = R\times x - \frac{w_t x^2}{2}$$

2 2

ximum bending moment will occur at the mid-section of span of the beam.
erefore, the maximum bending moment,

$$M = \frac{w_t \times L}{2} \times \frac{L}{2} - \frac{w_t}{2}\left(\frac{L}{2}\right)^2$$

$$= \frac{w_t L^2}{4} - \frac{w_t L^2}{8} = \frac{w_t L^2}{8}$$

cording to the problem, $\frac{w_t L^2}{8} = 100.2$

or, $\frac{w_t \times 4^2}{8} = 100.2$

or, $w_t = 50.1 kN/m$

refore, the required distributed load,

$$w = w_t - w_c$$

$$= (50.1 - 3.9) kN/m = 46.2 kN/m \text{ Answer}$$

blem P6.16:

resist a bending moment of $160kNm$, design a reinforced concrete beam with nced stress-reinforcement. Assume $d = 1.5b$, $f_c = 12MPa$, $f_s = 160MPa$ and $n = 8$.

en Data:

lth of beam $= b$

th of beam, $d = 1.5b$

ding moment, $M = 160kNm$

ss in concrete, $f_c = 12MPa$

ss in steel, $f_s = 160MPa$

o of moduli of elasticity, $n = 8$

Find:

el area, A_s

tion:

ivalent concrete section of the beam is shown in the figure below.

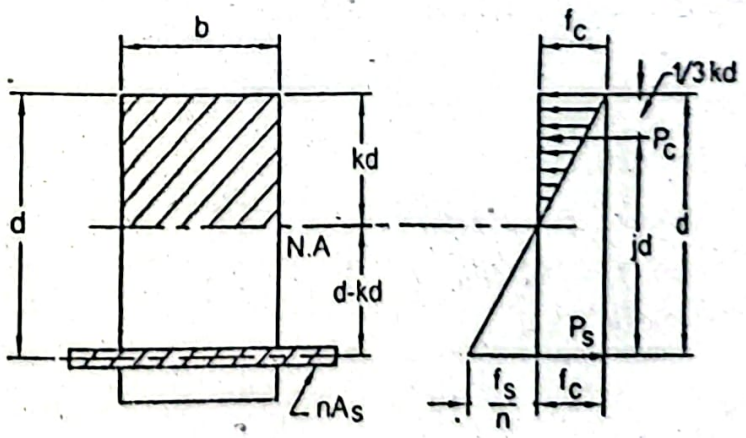

From the sjmilar triangles, $\frac{kd}{d} = \frac{f_c}{\frac{f_s}{n} + f_c}$.

$$\text{or, } k = \frac{f_c}{\frac{f_s}{n} + f_c}$$

$$\text{or, } k = \frac{12}{\frac{160}{8} + 12} = 0.375$$

From the previous figure the moment arm,

$$jd = d - \frac{1}{3}kd$$

$$\text{or, } j = 1 - \frac{1}{3}k = 1 - \frac{1}{3} \times 0.375 = 0.875$$

Resisting moment in terms of concrete,

$$M_c = P_c(jd) = \left(\frac{1}{2} f_c bkd\right)(jd)$$

$$\text{or, } 160 \times 10^6 = \frac{1}{2} \times 12 \times b \times 0.375 \times 1.5b \times 0.875 \times 1.5b$$

$$\text{or, } b = 330.56mm$$

Therefore, $d = 1.5 \times 330.56mm = 495.84mm$

Equating P_c in the concrete with P_s in the steel for balanced stress-reinforcem

$$\frac{1}{2} f_c bkd = A_s f_s$$

$$\text{or, } \frac{1}{2} \times 12 \times 330.56 \times 0.375 \times 495.84 = A_s \times 160$$

$$\text{or, } A_s = 2305mm^2 \quad \textit{Answer}$$

Problem P6.17:

Design a reinforced concrete beam with balanced stress-reinforcement to resist a moment of $100kNm$. Consider the allowable stress in concrete $f_c = 12MPa$ ar steel $f_s = 150MPa$. Assume $d = 1.5b$ and $n = 8$.

Given Data:

Depth of beam, $d = 1.5b$

Bending moment, $M = 100kNm$

Allowable stress in concrete, $f_c = 12MPa$

Allowable stress in steel, $f_s = 150MPa$

Ratio of moduli of elasticity, $n = 8$

To Find:

- Depth of beam, d

th of beam, b
area, A_s

on:
alent concrete section of the beam is shown in the figure below.

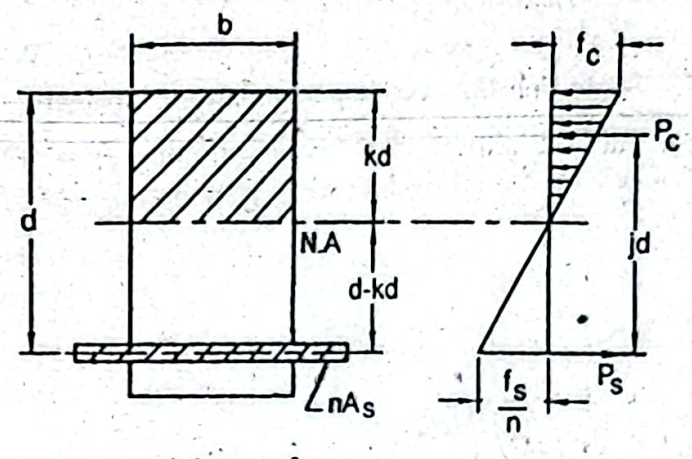

e,
$$\frac{kd}{d} = \frac{f_c}{\frac{f_s}{n} + f_c}$$

or, $$k = \frac{f_c}{\frac{f_s}{n} + f_c}$$

$$= \frac{12}{\frac{150}{8} + 12} = 0.39$$

arm,
$$jd = d - \frac{kd}{3}$$

or, $$j = 1 - \frac{k}{3} = 1 - \frac{0.39}{3} = 0.87$$

; moment in terms of concrete,
$$M_c = \left(\frac{1}{2} f_c bkd\right)(jd)$$

or, $$100 \times 10^6 = \frac{1}{2} \times 12 \times b \times 0.39 \times d \times 0.87 \times d$$

or, $$bd^2 = 49120{,}738.78 mm^3$$

ng $d = 1.5b$ we have,
$$b(1.5b)^2 = 49{,}120{,}738.78$$

or, $b = 279.5mm$ ***Answer***
$d = 1.5b = 1.5 \times 279.5mm = 419.23mm$ ***Answer***

ced stress-reinforcement, the compressive force in the concrete P_c is equal to force in the steel P_s. Therefore,
$$A_s f_s = \frac{1}{2} f_c bkd$$

$$\text{or, } A_s \times 150 = \frac{1}{2} \times 12 \times 279.5 \times 0.39 \times 419.23$$

$$\text{or, } A_s = 1828mm^2 \text{ Answer}$$

Problem P6.18:

A reinforced concrete beam resists a bending moment of $80kNm$. Width $b = 250mm$ and $n = 10$. Determine the depth of the beam d and area A_s stress-reinforcement. Consider the allowable stress in concrete $f_c = 10MP$ steel $f_s = 140MPa$.

Given Data:

Width of beam $b = 250mm$

Resisting moment, $M = 80kNm$

Allowable stress in concrete, $f_c = 10MPa$

Allowable stress in steel, $f_s = 140MPa$

Ratio of moduli of elasticity, $n = 10$

To Find:

- Depth of beam, d
- Steel area, A_s

Solution:

Equivalent concrete section of the beam is shown in the figure below.

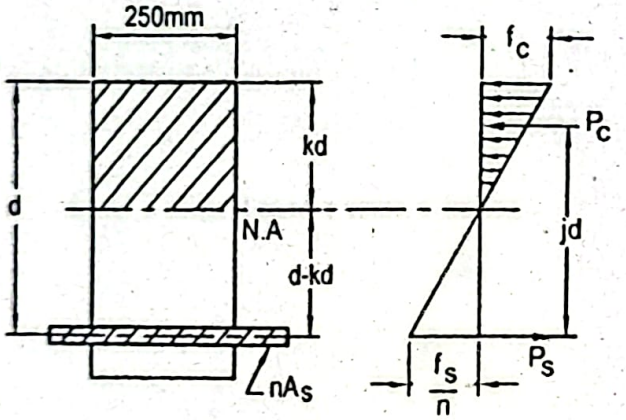

We have,

$$\frac{kd}{d} = \frac{f_c}{\frac{f_s}{n} + f_c}$$

$$\text{or, } k = \frac{f_c}{\frac{f_s}{n} + f_c}$$

$$= \frac{10}{\frac{140}{10} + 10} = 0.417$$

Moment arm,

$$jd = d - \frac{kd}{3}$$

$$\text{or, } j = 1 - \frac{k}{3} = 1 - \frac{0.417}{3} = 0.861$$

Resisting moment in terms of concrete,

$$M_c = \left(\frac{1}{2} f_c bkd\right)(jd)$$

$$\text{or, } 80 \times 10^6 = \left(\frac{1}{2} \times 10 \times 250 \times 0.417 \times d \times 0.861 \times d\right)$$

$$\text{or, } d = 422mm \text{ Answer}$$

For balanced stress-reinforcement, the compressive force in the concrete P_c is equal to the tensile force in the steel P_s. Therefore,

$$A_s f_s = \frac{1}{2} f_c bkd$$

$$\text{or, } A_s \times 140 = \frac{1}{2} \times 10 \times 250 \times 0.417 \times 422$$

$$\text{or, } A_s = 1571mm^2 \text{ Answer}$$

Problem P6.19:

Determine the safe resisting moment and the steel area A_s for balanced stress-reinforcement in a reinforced concrete beam with $b = 300mm$, $d = 500mm$ and $n = 10$. Consider the allowable stress in concrete $f_c = 12MPa$ and that in steel $f_s = 160MPa$.

Given Data:

Width of beam $b = 300mm$

Depth of beam, $d = 500mm$

Allowable stress in concrete, $f_c = 12MPa$

Allowable stress in steel, $f_s = 160MPa$

Ratio of moduli of elasticity, $n = 10$

To Find:

Resisting moment, M

Steel area, A_s

Solution:

Equivalent concrete section of the beam is shown in the figure below.

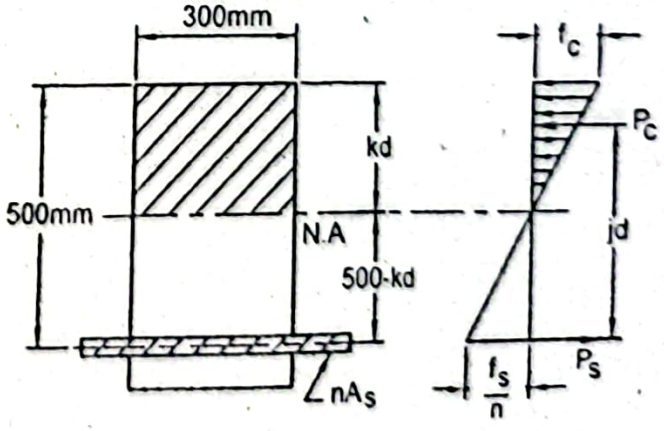

We have,

$$\frac{}{d} = \frac{}{\frac{f_s}{n} + f_c}$$

$$\text{or, } k = \frac{f_c}{\frac{f_s}{n} + f_c}$$

$$= \frac{12}{\frac{160}{10} + 12} = 0.429$$

Moment arm,

$$jd = d - \frac{kd}{3}$$

$$\text{or, } j = 1 - \frac{k}{3} = 1 - \frac{0.429}{3} = 0.857$$

Resisting moment in terms of concrete,

$$M_c = \left(\frac{1}{2} f_c bkd\right)(jd)$$

$$= \left(\frac{1}{2} \times 12 \times 300 \times 0.429 \times 500 \times 0.857 \times 500\right)$$

$$= 165.44 kNm$$

That is, the safe resisting moment, $M = 165.44 kNm$ *Answer*

For balanced stress-reinforcement, the compressive force in the concrete P_c is eq the tensile force in the steel P_s. Therefore,

$$A_s f_s = \frac{1}{2} f_c bkd$$

$$\text{or, } A_s \times 160 = \frac{1}{2} \times 12 \times 300 \times .429 \times 500$$

$$\text{or, } A_s = 2413 mm^2 \text{ Answer}$$

Problem P6.20:

A simply supported reinforced concrete beam of span $5m$ carries a concentrated lo $100kN$ at its mid-span. Design the beam with balanced stress-reinforcement. Con $b = 400mm$, $f_c = 12MPa$, $f_s = 140MPa$, $n = 10$ and allow $50mm$ of concrete belov reinforcement. Density of concrete is $2410kg / m^3$.

Given Data:

Span of beam, $L = 5m$

Width of beam, $b = 400mm$

Concrete below reinforcement $= 50mm$

Density of concrete, $\rho = 2410kg / m^3$

Concentrated load, $P = 100kN$

Stress in concrete, $f_c = 12MPa$

Ratio of moduli of elasticity, $n = 10$

To Find:

- Depth of beam, d
- Steel area, A_s

Solution:

Equivalent concrete section of the beam is shown in the figure below.

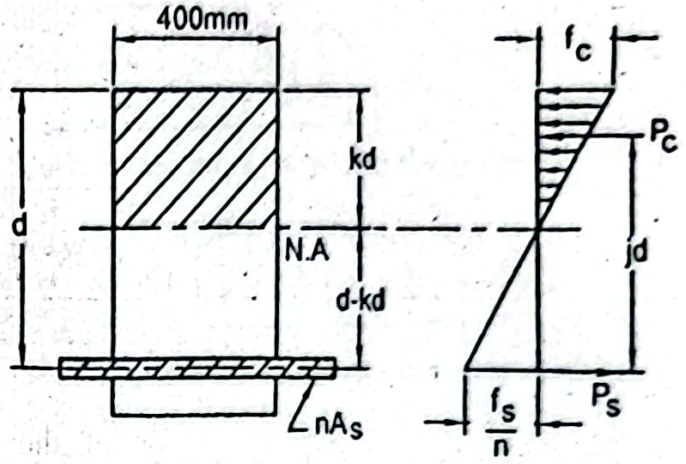

We have,
$$\frac{kd}{d} = \frac{f_c}{\frac{f_s}{n} + f_c}$$

or, $$k = \frac{f_c}{\frac{f_s}{n} + f_c}$$

$$= \frac{12}{\frac{140}{10} + 12} = 0.462$$

Moment arm,
$$jd = d - \frac{kd}{3}$$

or, $$j = 1 - \frac{k}{3} = 1 - \frac{0.462}{3} = 0.846$$

Resisting moment in terms of concrete,

$$M_c = \left(\frac{1}{2} f_c bkd\right)(jd)$$

or, $$M_c = \frac{1}{2} \times 12 \times 400 \times 0.462 \times d \times 0.846 \times d$$

$$= 938.05d^2 Nmm = 0.93805d^2 Nm \qquad (i)$$

Free body diagram of the entire beam, bending moment diagrams with concentrated and distributed loads are shown in the figure below.

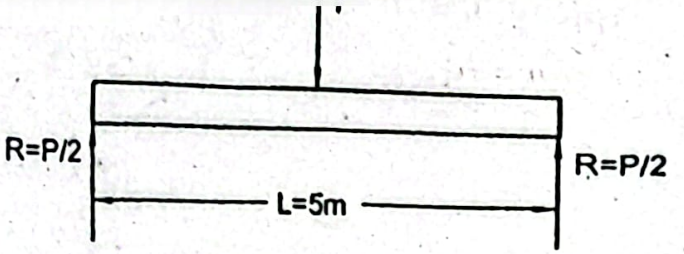

Free body diagram of entire beam

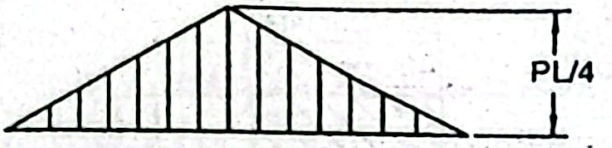

Bending moment diagram for concentrated load

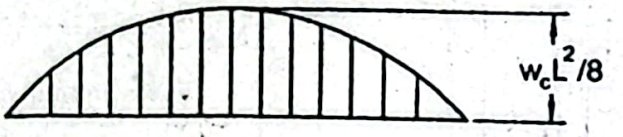

Bending moment diagram for distributed load

Maximum bending moment occurs at the mid-section of the beam for concentrated and distributed load due to the self weight of the beam.
Distributed load due to the self weight,

$$w_c = \left(\frac{2410\times 9.81}{10^3}\right)\times 1\times\frac{400}{10^3}\times\left(\frac{d+50}{10^3}\right)$$

$$= 9.4568\times(d+50)\times 10^{-3}\ \frac{kN}{m}$$

Maximum bending moment, $M = \left(\frac{PL}{4}+\frac{w_cL^2}{8}\right)$

$$= \left[\frac{100\times 10^3\times 5}{4}+\frac{9.4568\times(d+50)}{8}\times 5^2\right]$$

$$= \left[125\times 10^3 + 29.5525\times(d+50)\right] Nm$$

Balancing Equations (i) and (ii),

$$0.93805d^2 = \left[125\times 10^3 + 29.5525\times(d+50)\right]$$

or, $d = 383.3mm$ **Answer**

For balanced stress-reinforcement, the compressive force in the concrete P_c is e the tensile force in the steel P_s.

Therefore, $$A_s f_s = \frac{1}{2} f_c bkd$$

or, $$A_s\times 140 = \frac{1}{2}\times 12\times 400\times 0.462\times 383.3$$

or, $A_s = 3036mm^2$ **Answer**

Problem P6.21:

A simply supported reinforced concrete beam of span $6m$ carries a uniformly distributed load of $15kN/m$ in addition to its self weight. Design the beam with balanced stress-reinforcement. Consider $f_c = 12MPa$, $f_s = 160MPa$, $n = 8$ and allow $50mm$ of concrete below the reinforcement. Density of concrete is $2410kg/m^3$. Assume $d = 1.5b$.

Given Data:

Span of beam, $L = 6m$

Depth of beam, $d = 1.5b$

Concrete below reinforcement $= 50mm$

Density of concrete, $\rho = 2410kg/m^3$

Distributed load, $w = 15kN/m$

Stress in concrete, $f_c = 12MPa$

Stress in steel, $f_s = 160MPa$

Ratio of moduli of elasticity, $n = 8$

To Find:

- Depth of beam, d
- Width of beam, b
- Steel area, A_s

Solution:

Equivalent concrete section of the beam is shown in the figure below.

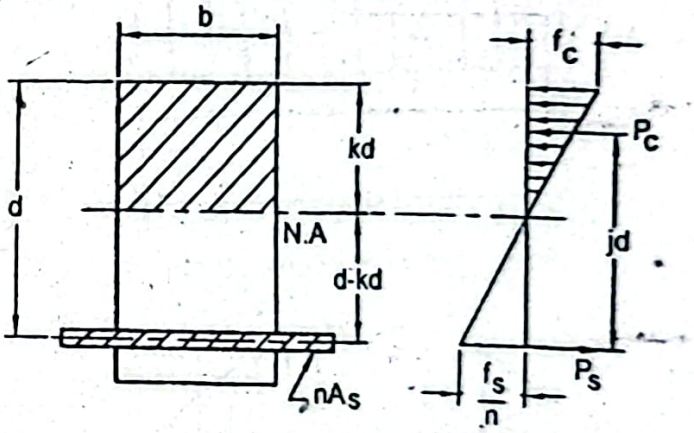

We have,
$$\frac{kd}{d} = \frac{f_c}{\frac{f_s}{n} + f_c}$$

or, $$k = \frac{f_c}{\frac{f_s}{n} + f_c}$$

$$= \frac{12}{\frac{160}{8} + 12} = 0.375$$

Moment arm,
$$jd = d - \frac{kd}{3}$$

Resisting moment in terms of concrete,

$$M_c = \left(\frac{1}{2} f_c bkd\right)(jd)$$

$$= \frac{1}{2} \times 12 \times b \times 0.375 \times 1.5b \times 0.875 \times 1.5b$$

$$= 4.4297 b^3 Nmm = 4.4297 \times 10^{-3} b^3 Nm$$

Free body diagram of the entire beam and the bending moment diagram w distributed load are shown in the figure below.

Total distributed load, $w_t = w + w_c$

where, $w = 15 \frac{kN}{m} = 15 \times 10^3 \frac{N}{m}$

and $w_c = \left(\frac{2410 \times 9.81}{10^3}\right) \times 1 \times \frac{b}{10^3} \times \frac{d+50}{10^3} \frac{kN}{m}$

$$= \left[0.02364 \times 10^{-3} \times b \times (d+50)\right] \frac{kN}{m}$$

Therefore, $w_t = w + w_c = [15 \times 10^3 + 0.02364 \times b \times (d+50)] \frac{N}{m}$

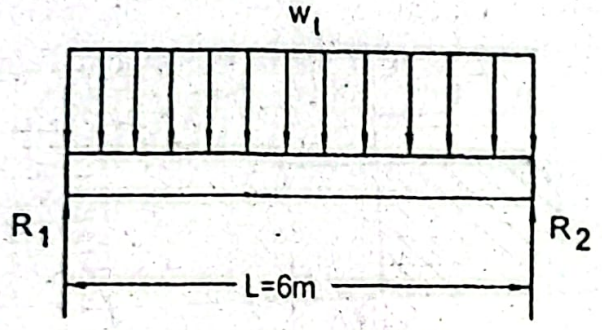

Free body diagram of entire beam

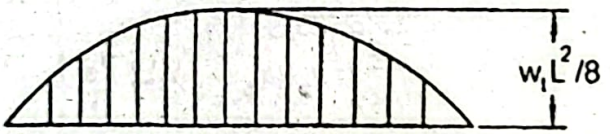

Bending moment diagram for distributed load

Maximum bending moment,

$$M = \frac{w_t L^2}{8} = \frac{\left[15 \times 10^3 + 0.02364 \times b \times (d+50)\right] \times 6^2}{8} \quad (ii)$$

Balancing Equations (i) and (ii),

$$4.4297 \times 10^{-3} b^3 = \frac{\left[15 \times 10^3 + 0.02364 \times b \times (1.5b+50)\right] \times 36}{8}$$

or, $b = 262.2mm$ *Answer*

Therefore, $d = 1.5 \times 262.2mm = 393.3mm$ *Answer*

For balanced stress-reinforcement, the compressive force in the concrete P_c is equal to the tensile force in the steel P_s. Therefore,

$$A_s f_s = \frac{1}{2} f_c bkd$$

$$\text{or, } A_s \times 160 = \frac{1}{2} \times 12 \times 262.2 \times 0.375 \times 393.3$$

$$\text{or, } A_s = 1450mm^2 \text{ Answer}$$

Problem P6.22:

A reinforced concrete beam of span $8m$ supports a uniformly distributed load of $25kN/m$ in addition to its self weight. The beam is restrained at its both ends. Design the beam with balanced stress-reinforcement. Consider $b = 350mm$, $f_c = 12MPa$, $f_s = 140MPa$, $n = 8$ and allow $50mm$ of concrete below the reinforcement. Density of concrete is $2410kg/m^3$.

Given Data:

Span of beam, $L = 8m$

Width of beam, $b = 350mm$

Concrete below reinforcement $= 50mm$

Density of concrete, $\rho = 2410kg/m^3$

Distributed load, $w = 25kN/m$

Stress in concrete, $f_c = 12MPa$

Stress in steel, $f_s = 140MPa$

Ratio of moduli of elasticity, $n = 8$

To Find:

- Depth of beam, d
- Steel area, A_s

Solution:

Equivalent concrete section of the beam is shown in the figure below.

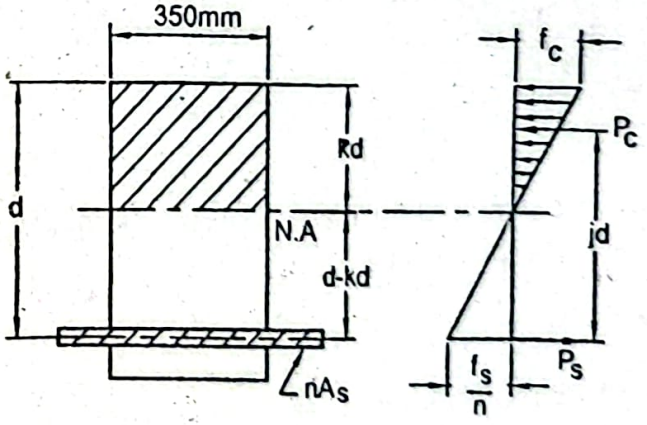

We have,

$$\frac{kd}{d} = \frac{f_c}{\frac{f_s}{n} + f_c}$$

$$= \frac{12}{\frac{140}{8} + 12} = 0.407$$

Moment arm, $jd = d - \frac{kd}{3}$

or, $j = 1 - \frac{k}{3} = 1 - \frac{0.407}{3} = 0.864$

Resisting moment in terms of concrete,

$$M_c = \left(\frac{1}{2} f_c bkd\right)(jd)$$

$$= \frac{1}{2} \times 12 \times 350 \times 0.407 \times d \times 0.864 \times d$$

$$= 739.48 d^2 \, Nmm$$

$$= 0.73848 d^2 \, Nm$$

Free body diagram of the entire beam and the bending moment diagram are shown figure below.

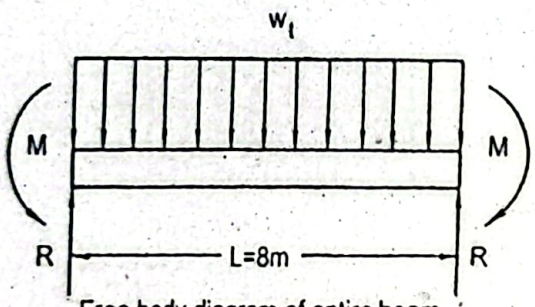

Free body diagram of entire beam

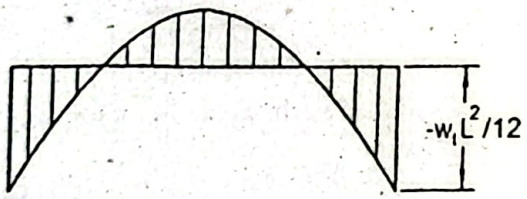

Bending moment diagram for distributed load with fixed ends

A beam with a uniformly distributed load for the restrained ends has maximum bendi moment at its supporting ends and this moment,

$$M = \frac{w_t L^2}{12}$$

Here the absolute value of the moment has been considered omitting the negative sign. Now the total distributed load, $w_t = w + w_c$

where, w_c = Distributed load contributed by its self weight

w = Applied distributed load

Here,

$$w = 25kN/m = 25\times10^3 N/m$$

$$w_c = 2410\times1\times\frac{350}{10^3}\times\frac{(d+50)}{10^3}\frac{kg}{m}$$

$$= \frac{2410\times9.81}{10^3}\times\frac{350}{10^3}\times\frac{(d+50)}{10^3}\frac{N}{m}$$

$$= 8.275\times(d+50)\times10^{-3}\frac{kN}{m}$$

Therefore,

$$w_t = w + w_c$$

$$= \left[257\times10^3 + 8.275\times(d+50)\right]\frac{N}{m}$$

Maximum bending moment,

$$M = \frac{w_t L^2}{12} = \frac{25\times10^3 + 8.275\times(d+50)\times8^2}{12} \qquad (ii)$$

Now balancing Equations (i) and (ii),

$$0.73848d^2 = \frac{\left[25\times10^3 + 8.275\times(d+50)\right]\times64}{12}$$

or, $d = 459.3mm$ **Answer**

For balanced stress-reinforcement, the compressive force in the concrete P_c is equal to the tensile force in the steel P_s. Therefore,

$$A_s f_s = \frac{1}{2} f_c bkd$$

or, $A_s \times 140 = \frac{1}{2}\times12\times350\times0.407\times459.3$

or, $A_s = 2804mm^2$ **Answer**

Note: For the negative bending moment at the ends of the beam, the reinforcement has to be used at the top in place of the bottom at the ends of the beam.

Problem P6.23:

A reinforced concrete beam of *T*-section as shown in Figure P6.23 has dimensions $b_1 = 650mm$, $b_2 = 250mm$, $d_1 = 100mm$, $d_2 = 400mm$, $A_s = 2500mm^2$ and $n = 8$. Determine the maximum stress developed in the concrete and steel for a bending moment of $100kNm$.

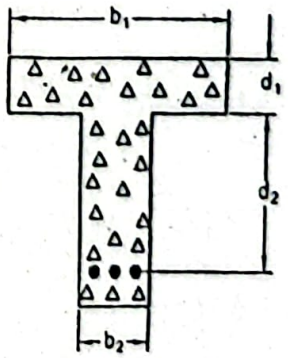

Figure P6.23

Given Data:

Width, $b_1 = 650mm$

Width, $b_2 = 250mm$

Depth, $d_1 = 100mm$

Depth, $d_2 = 400mm$

Steel area, $A_s = 2500mm^2$

Bending moment, $M = 100kNm$

Ratio of moduli of elasticity, $n = 8$

To Find:

- Maximum stress in concrete, f_c
- Maximum stress in steel, f_s

Solution:

Equivalent concrete section of the beam is shown in the figure below.

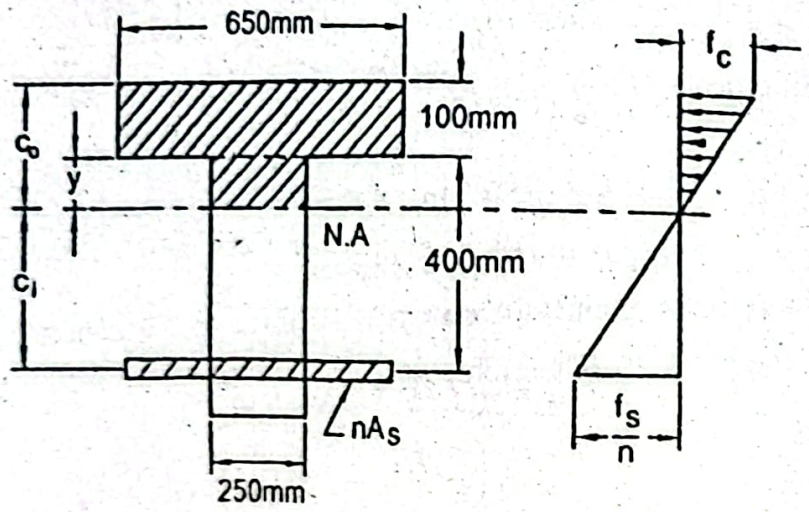

Since the moment of concrete area above the neutral axis is equal to the moment o concrete equivalent area of steel below the neutral axis,

$$(650\times100)\left(\frac{100}{2}+y\right)+(250\times y)\frac{y}{2}=nA_s(400-y)$$

$$\text{or, } 65000(50+y)+125y^2=8\times2500(400-y)$$

$$\text{or, } y^2+680y-38000=0$$

$$\text{or, } y=\frac{-680\pm\sqrt{680^2+4\times38000}}{2}$$

$$\text{or, } y=51.92mm$$

Moment of inertia about the neutral axis,

$$I_{NA}=\frac{1}{12}\times650\times100^3+(650\times100)\left(\frac{100}{2}+51.92\right)^2$$

$$+\frac{1}{12}\times250\times51.92^3+(250\times51.92)\left(\frac{51.92}{2}\right)^2$$

$$+8\times2500\times(400-51.92)^2$$

$$= 3,164,223,347 mm^4$$

We have, $$\sigma = \frac{Mc}{I} = \frac{Mc_a}{I_{NA}}$$

$$f_c = \frac{100 \times 10^6 \times (100 + 51.92)}{3164223347}$$

$$= 4.80 MPa \text{ Answer}$$

Again, $$\sigma = \frac{Mc}{I} = \frac{Mc_1}{I_{NA}}$$

or, $$\frac{f_s}{n} = \frac{100 \times 10 \times (400 - 51.92)}{3164223347}$$

or, $$f_s = 11 \times n$$

$$= 11 \times 8 MPa = 88 MPa \text{ Answer}$$

Problem P6.24:

A reinforced concrete beam of *T*-section has dimensions $b_1 = 600mm$, $b_2 = 300mm$, $d_1 = 100mm$, $d_2 = 500mm$ as shown in Figure P6.24. Determine the maximum bending moment that can be applied if $f_c \le 12MPa$ and $f_s \le 160MPa$. Consider $A_s = 2500mm^2$ and $n = 8$.

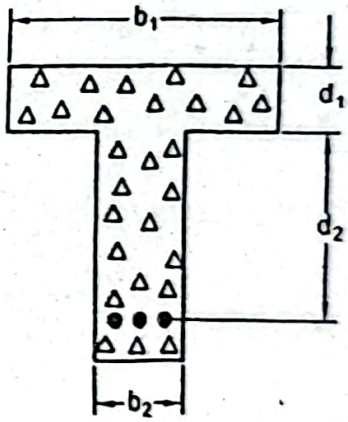

Figure P6.24

Given Data:

Width, $b_1 = 600mm$

Width, $b_2 = 300mm$

Depth, $d_1 = 100mm$

Depth, $d_2 = 500mm$

Steel area, $A_s = 2500mm^2$

Limiting stress in concrete, $f_c \le 12MPa$

Limiting stress in steel, $f_s \le 160MPa$

Ratio of moduli of elasticity, $n = 8$

Solution:

Equivalent concrete section of the beam is shown in the figure below.

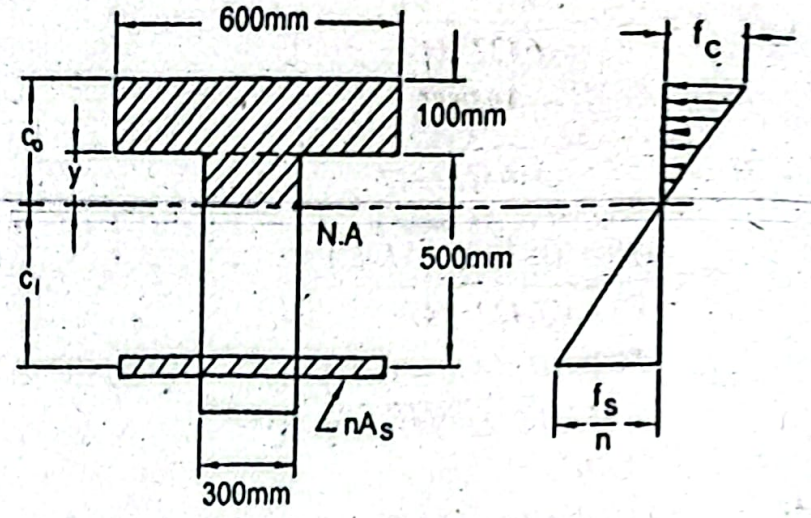

Since the moment of concrete area above the neutral axis is equal to the mome concrete equivalent area of steel below the neutral axis,

$$(600\times100)\left(\frac{100}{2}+y\right)+(300\times y)\frac{y}{2}=nA_s(500-y)$$

$$\text{or, } 60000(50+y)+150y^2=8\times2500(500-y)$$

$$\text{or, } y^2+533.33y-46666.67=0$$

$$\text{or, } y=\frac{-533.33\pm\sqrt{533.33^2+4\times4666667}}{2}$$

$$\text{or, } y=76.52mm$$

Moment of inertia about the neutral axis,

$$I_{NA}=\frac{1}{12}\times600\times100^3+(600\times100)\left(\frac{100}{2}+76.52\right)^2$$

$$+\frac{1}{12}\times300\times76.52^3+(300\times76.52)\left(\frac{76.52}{2}\right)^2$$

$$+8\times2500\times(500-76.52)^2$$

$$=4,641,949,667mm^4$$

Resisting moment in terms of concrete,

$$M_c=\frac{\sigma I}{c}=\frac{f_cI_{NA}}{c_o}=\frac{12\times4,641,949,667}{(100+76.52)}kNm$$

$$=315.56kNm$$

Resisting moment in terms of steel,

$$M_s=\frac{\sigma I}{c}=\frac{\left(\frac{f_s}{n}\right)I_{NA}}{c_i}$$

$$= \left(\frac{160}{8}\right) \times \frac{4,641,949,667}{(500-76.52)}$$

$$= 219.23kNm$$

Considering the smaller of two values, the required bending moment,

$$M = 219.23kNm \text{ Answer}$$

It is observed that the limiting stress will reach in the steel side before that in the concrete side. Therefore, the beam is in *under-reinforcement*.

Problem P6.25:

A reinforced concrete beam has dimensions $b_1 = 800mm, b_2 = 300mm$, $d_1 = 100mm$, $d_2 = 500mm$ as shown in Figure P6.25. Determine the maximum resisting moment and the steel area for balanced stress-reinforcement. Consider $f_c = 12MPa$, $f_s = 160MPa$ and $n = 10$.

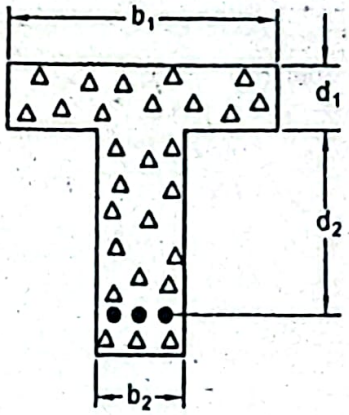

Figure P6.25

Given Data:

Width, $b_1 = 800mm$

Width, $b_2 = 300mm$

Depth, $d_1 = 100mm$

Depth, $d_2 = 500mm$

Stress in concrete, $f_c = 12MPa$,

Stress in steel, $f_s = 160MPa$

Ratio of moduli of elasticity, $n = 10$

To Find:

-Maximum resisting moment, M

-Steel area, A_s

Solution:

Equivalent concrete section of the beam is shown in the figure below.

From the similar triangles,

$$\frac{f_c}{\frac{f_s}{n} + f_c} = \frac{100 + y}{100 + 500}$$

$$\frac{}{10}$$

or, $y = 157.14mm$

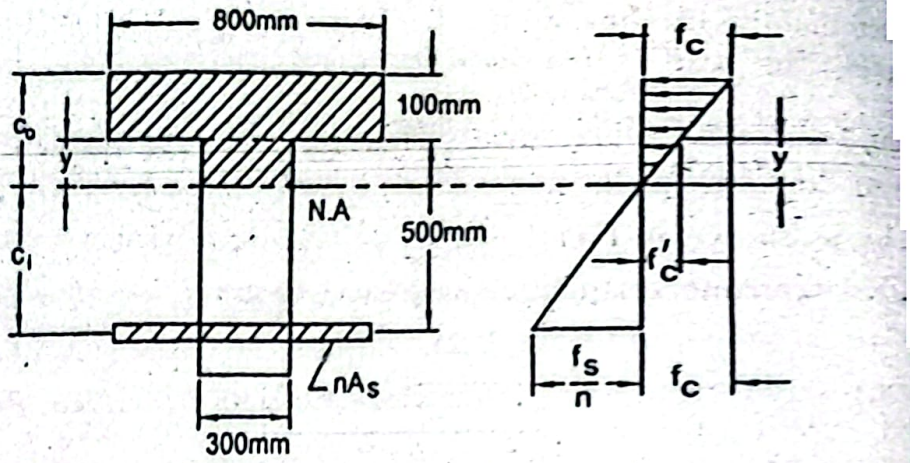

From the above figure, $\frac{f_c}{f'_c} = \frac{100+y}{y}$

$$\text{or, } f'_c = \frac{yf_c}{100+y} = \frac{157.14\times12}{100+157.14}MPa = 7.33MPa$$

For the balanced stress-reinforcement, the compression force in the concrete will
to the tensile force in the steel. Therefore,

$$A_s f_s = \frac{1}{2}(f_c + f'_c)\times800\times100 + \frac{1}{2}f'_c\times300\times y$$

$$\text{or, } A_s\times160 = \frac{1}{2}(12+7.33)\times800\times100 + \frac{1}{2}\times7.33\times300\times157.1$$

$$\text{or, } A_s = 5912.3mm^2 \text{ Answer}$$

Moment of inertia about the neutral axis,

$$I_{NA} = \frac{1}{12}\times800\times100^3 + (800\times100)\left(\frac{100}{2}+157.14\right)^2$$

$$+\frac{1}{12}\times300\times157.14^3 + (300\times157.14)\left(\frac{157.14}{2}\right)^2$$

$$+10\times5912.3\times(500-157.14)^2$$

$$=108.37\times10^8 mm^4$$

Resisting moment in terms of concrete,

$$M_c = \frac{\sigma I}{c} = \frac{f_c I_{NA}}{c_o} = \frac{12\times108.37\times10^8}{(100+157.14)}kNm = 505.73kNm$$

For the balanced stress-reinforcement, the resisting moment in terms of steel M_s is e
to M_c.

Therefore, $M_s = M_c = M = 505.73kNm$ *Answer*

Alternate Method for Resisting Moment

Compressive force in the concrete has been split into three components P_{c_1}, P_{c_2} and P_{c_3} for convenience as shown in the figure below.

Moment arm, $(jd)_1 = \left(600 - \frac{100}{3}\right) mm = 566.67 mm$

Moment arm, $(jd)_2 = \left(600 - \frac{100}{2}\right) mm = 550 mm$

Moment arm, $(jd)_3 = \left[600 - \left(100 + \frac{157.14}{3}\right)\right] mm = 447.62 mm$

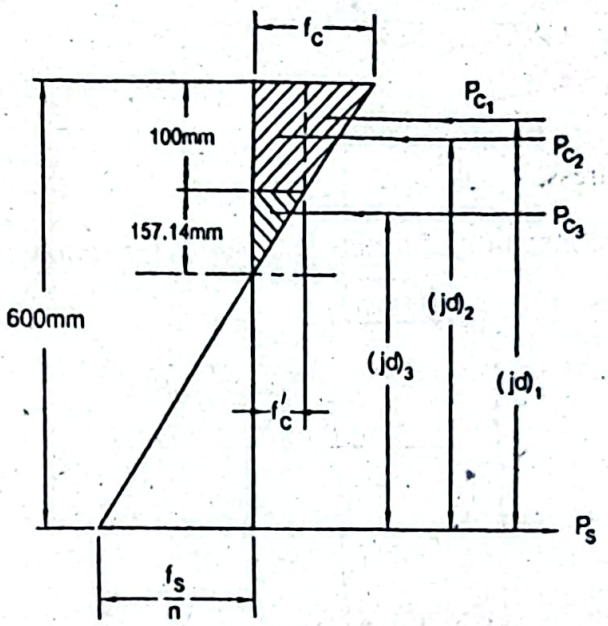

Resisting moment due to the compressive force in the concrete P_{c_1},

$$M_{c_1} = \frac{1}{2} \times (f_c - f_c') \times 800 \times 100 \times (jd)_1$$

$$= \frac{1}{2} \times (12 - 7.33) \times 800 \times 100 \times 566.67 = 105.85 kNm$$

Resisting moment due to the compressive force in the concrete P_{c_2}

$$M_{c_2} = f_c' \times 800 \times 100 \times (jd)_2$$

$$= 7.33 \times 800 \times 100 \times 550 = 322.52 kNm$$

Resisting moment due to the compressive force in the concrete P_{c_3}

$$M_{c_3} = \frac{1}{2} \times f_c' \times 300 \times 157.14 \times (jd)_3$$

$$= \frac{1}{2} \times 7.33 \times 300 \times 157.14 \times 447.62 = 77.34 kNm$$

Therefore, the total resisting moment,

$$M = M_{c_1} + M_{c_2} + M_{c_3}$$

$= (105.85 \ldots$, $\ldots kNm$ *Answer*

Problem P6.26:

A reinforced concrete beam of width $400mm$ and depth $600mm$ is subjected to shear of $75kN$. Calculate the maximum shearing stress and the bond stre reinforcement consists of 5 rods each of $25mm$ diameter. Assume $j = 0.875$.

Given Data:

Depth of beam, $d = 600mm$

Width of beam, $b = 400mm$

Diameter of rod, $D = 25mm$

Fraction of distance, $j = 0.875$

Vertical shear, $V = 75kN$

To Find:

- Maximum shearing stress, τ_{max}
- Bond stress, τ_b

Solution:

The section of the beam consisting of 5 rods is shown in the following figure.

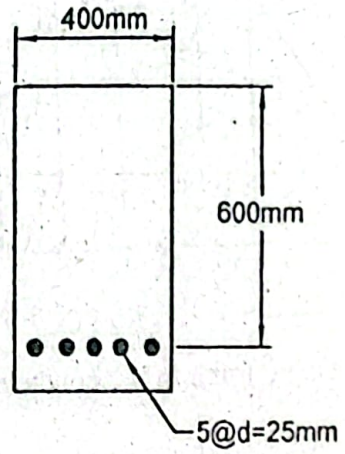

Maximum shearing stress, $\tau_{max} = \dfrac{V}{jdb}$

$$= \frac{75 \times 10^3}{0.875 \times 600 \times 400}$$

$$= 357.14kPa \text{ Answer}$$

Bond stress, $\tau_b = \dfrac{V}{jd\sum O}$

Sum of the perimeters of the reinforcing bars,

$$\sum O = 5 \times \pi d$$

$$= 5 \times \pi \times 25mm$$

$$= 392.70mm$$

Therefore, $\tau_b = \dfrac{75 \times 10^3}{0.875 \times 600 \times 392.70} kPa$

$$= 363.78kPa \text{ Answer}$$

EXERCISES

Problem E6.1:

A simply supported beam reinforced at the top and bottom by the steel plates as shown in Figure E6.1, supports a uniformly distributed load of wkN/m throughout the entire span of $4m$. If the beam is to resist a maximum bending moment of $60kNm$, determine w. Consider the allowable stress in timber $\sigma_t = 8MPa$, allowable stress in steel $\sigma_s = 120MPa$ and $n = 15$.

Ans.: $w = 37.09kN/m$

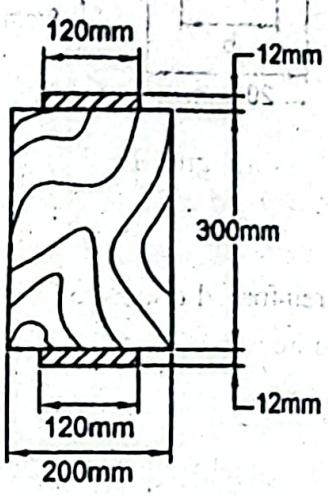

Figure E6.1

Problem E6.2:

A timber beam is reinforced at the bottom only by an aluminum plate as shown in Figure E6.2. If the allowable stress in timber $\sigma_t = 10MPa$ and allowable stress in aluminum $\sigma_a = 80MPa$, determine the moment that can be resisted by the beam. Choose $n = 5$.

Ans.: $w = 36.80kNm$

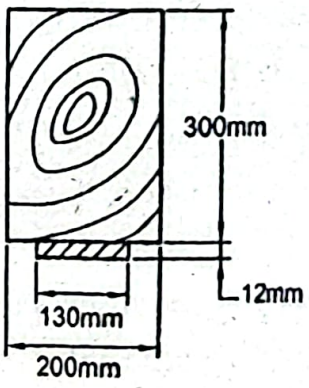

Figure E6.2

Problem E6.3:

A timber beam as shown in Figure E6.3 is reinforced at the top and bottom by the aluminum plates of thickness $8mm$. Determine the width of the aluminum plates if the beam is to resist a bending moment of $40kNm$. Allowable stresses in timber and aluminum are respectively $10MPa$ and $80MPa$. Assume $n = 5$.

Ans.: $b = 79.04mm$

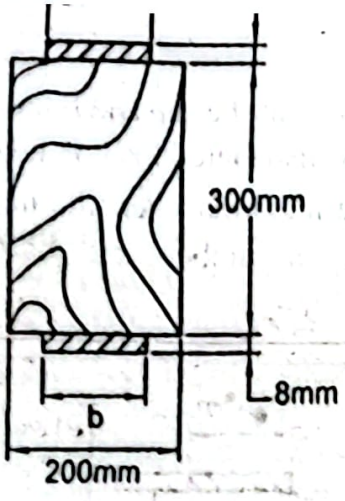

Figure E6.3

Problem E6.4:
For a moment of $150kNm$ in a reinforced concrete beam with $b = 300mm$, $d = 450mm$, $A_s = 4000mm^2$ and $n = 8$, determine the maximum stresses developed in the concrete and steel.

Ans.: $f_c = 12MPa, f_s = 100MPa$

Problem E6.5:
Determine the maximum bending moment that can be applied to a reinforced concrete beam with $b = 400mm, d = 600mm$, $A_s = 4000mm^2$ and $n = 8$, if the allowable stress in concrete $f_c \le 12MPa$ and that in steel $f_s \le 160MPa$. Is the beam is in under-reinforcement, over-reinforcement or balanced reinforcement?

Ans.: $m = 299.52kNm$; in *over-reinforcement*

Problem E6.6:
A maximum stress of $150MPa$ is developed in the steel of a reinforced concrete beam with $b = 400mm, d = 600mm$, $A_s = 3000mm^2$ and $n = 8$ when a bending moment of $225kNm$ is applied. What stress is developed in the concrete?

Ans.: $f_c = 7.5MPa$

Problem E6.7:
Design a reinforced concrete beam with balanced stress-reinforcement that will resist a bending moment of $150kNm$. Allowable stresses in concrete $f_c = 11MPa$ and that in steel $f_s = 155MPa$. Assume $d = 1.6b$ and consider $n = 10$.

Ans.: $b = 310mm; d = 496mm; A_s = 2264mm^2$

Problem E6.8:
A reinforced concrete beam of *T*-section has dimensions $b_1 = 500mm$, $b_2 = 250mm$, $d_1 = 125mm$, $d_2 = 550mm$ as shown in Figure E6.8. Determine the maximum bending

moment that can be applied if $f_c \leq 10MPa$ and $f_s \leq 140MPa$. Consider $A_s = 3000mm^2$ and $n = 10$.

Ans.: $M = 254.20kN.m$

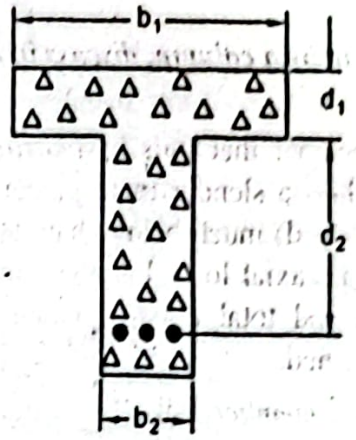

Figure E6.8

Problem E6.9:

A reinforced concrete beam has width of $300mm$ and depth of $450mm$. The beam consists of 5 rods for its reinforcement and is subjected to a vertical shear of $60kN$. If the maximum shearing stress and the bond stress are equal, determine the bond stress and the diameter of the rod. Assume $j = 0.875$.

Ans.: $\tau_b = 508kPa; d = 23.87mm$

Question 7.1: What do you mean by a column, discuss in detail.

Answer:

A *column* is a compression member that fails by *buckling* (excessive lateral bendin under gradually applied load. It is a slender member compared to its length. Buckli failure occurs at a load (critical load) much below than its crushing load. A *critical lo* or *buckling load* is the maximum axial load that a column withstands and still remai straight after which a sudden and total collapse occurs. At the critical load neut equilibrium of the column is reached.

In contrast, a *short compression member* fails by crushing and it undergoes negligib lateral deflection even if it carries an eccentric load. However, there is no sha demarcation line between a short compression member and a column. A compressio member is usually called a column when its unsupported length is 10 times its lea lateral dimension. Columns are usually classified into two groups: long and intermediat A *long column* fails by buckling and an *intermediate column* fails by both buckling an crushing.

A column failure can be very dangerous because there is no warning that the critical loa has been reached. On the other hand, in case of a beam as the load increases th deflection increases and the overload in the beam can be indicated from the excessiv deflection, which is visible.

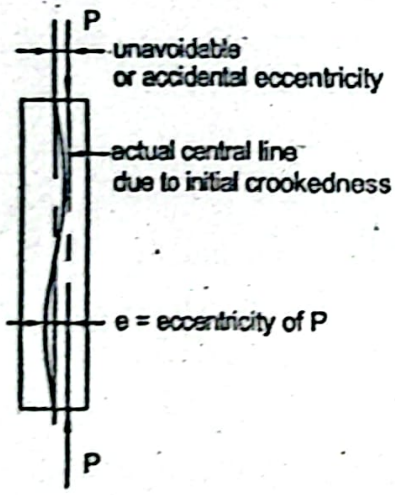

(Shown in exaggerated form for better understanding)

Figure 7.1: Typical Shape of an Actual Column.

When a homogeneous and perfectly straight column of constant cross-section is subjected to an axial compressive load, it is called an *ideal column*. But an actual column has some imperfections of material and fabrication, which may contain crookedness. Moreover, there may be unavoidable eccentricity of the load P as well. In Figure 7.1 an actual column is shown in exaggeration form for better understanding. The crookedness of the

olumn and the accidental eccentric load yield indeterminate eccentricity e as shown in igure 7.1.

or a short compression member the flexural stress becomes insignificant compared to its irect compressive stress, if the eccentricity and lateral deflection are small. As the length f the compression member increases, the importance of direct compressive stress ecreases and that of the flexural stress increases. For that reason a long column is quite lexible. Since the deflection is proportional to the cube of the length, relatively a small oad creates a large flexural stress in a column accompanied by a negligible direct ompressive stress. However, an intermediate column is subjected to the effect of both irect compressive stress and flexural stress.

uestion 7.2: What are the different end conditions of columns?

nswer:

igure 7.2 shows columns with different end conditions. In Figures 7.2a, 7.2b, 7.2c and .2d respectively a column with *hinged ends*, a column with *fixed ends*, a column with *ne end fixed-other end hinged* and a column with *one end fixed-other end free* are own. The symbol P indicates the applied load, L indicates the length of column and L_e dicates the effective length of column.

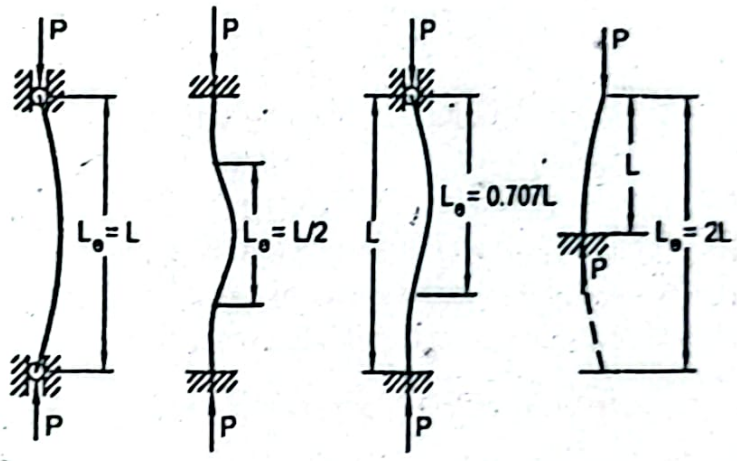

(a) Hinged ends (b) Fixed ends (c) One end fixed one end hinged (d) One end fixed one end free

Figure 7.2: Columns with Different End Conditions.

uestion 7.3: Derive an expression of Euler's Formula for critical load. Provide a neralized expression applicable to various end conditions.

nswer:

theoretical analysis of critical load for a long column was done by the great Swiss athematician *Leonhard Euler* in 1757. This equation is derived by using the differential uation of the elastic curve of a beam given by Equation (5.7),

$$\frac{\frac{d^2y}{dx^2}}{\left[1+\left(\frac{dy}{dx}\right)^2\right]^{3/2}} = \frac{M}{EI} \qquad (7.1)$$

where,

M = Moment

E = Modulus of elasticity

I = Least moment of inertia

$\frac{dy}{dx}$ = Slope

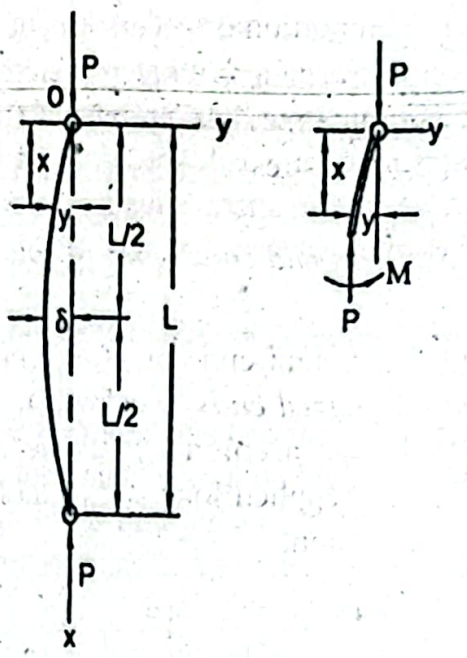

(a) (b)

Figure 7.3: A Column with Hinged Ends.

Figure 7.3a shows the center line of a column, which is in equilibrium under the a its critical load P. The ends of the column is assumed to be hinged (often calle pivoted or pinned) and is restrained against the lateral movement. The lateral dc δ of the column is so small that there is negligible difference between the origina of the column and its projection on a vertical plane. Under these conditions the slc is very small, as a result Equation (7.1) can be written as,

$$EI\frac{d^2y}{dx^2} = M$$

At any distance x moment M can be written as,

$$M = -Py$$

According to the convention moment should be positive for a concave shape, but the negative direction of y-axis, hence the moment is negative. Now from Equ (7.2) and (7.3) one finds,

$$EI\frac{d^2y}{dx^2} = -Py$$

$$\text{or, } \frac{d^2y}{dx^2} + \frac{P}{EI}y = 0$$

Writing, $\lambda^2 = \frac{P}{EI}$ in Equation (7.5),

$$\frac{d^2y}{dx^2} + \lambda^2 y = 0 \qquad (7.6)$$

Solution of Equation (7.6) is,

$$y = A\sin\lambda x + B\cos\lambda x \qquad (7.7)$$

where, A and B are the arbitrary constants, which can be determined from the following boundary conditions:

At $x = 0$, $y = 0$, therefore, constant $B = 0$.

Again at $x = L$, $y = 0$,

Substituting these values, $$0 = A\sin\lambda L \qquad (7.8)$$

Equation (7.8) is satisfied if $A = 0$, in that case there is no deflection or bending of the column, therefore,

$$\lambda L = n\pi, \text{ where, } n = 0, 1, 2, 3.....$$

Now substituting the value of λ,

$$\sqrt{\frac{P}{EI}}L = n\pi$$

$$\text{or, } P = n^2\frac{EI\pi^2}{L^2} \qquad (7.9)$$

The value of $n = 0$ is meaningless because in that condition the load P is zero. For the other values of n the column bends into the shapes as shown in Figure 7.4 (first three *buckling modes* with hinged end column).

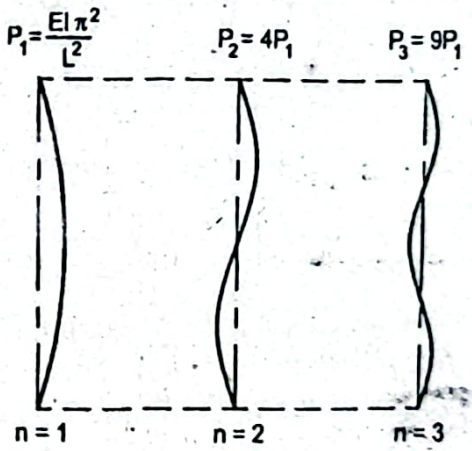

Figure 7.4: First Three Buckling Modes with Hinged End Column.

Of these shapes the most important one is with $n = 1$; the other shapes occur with the larger loads and are possible only if the column is braced at the mid point or third points respectively for the values of $n = 2$ and $n = 3$. In reality the higher modes do not come into picture, since the least critical load occurs at $n = 1$. The expression of the critical load for a column with hinged ends is therefore,

$$P_{cr} = \frac{}{L^2}$$

This is known as the *Euler's column formula*. The expressions of the critical loads f columns with the other end conditions can be obtained using the expression of c load for the column with hinged ends in the following way.

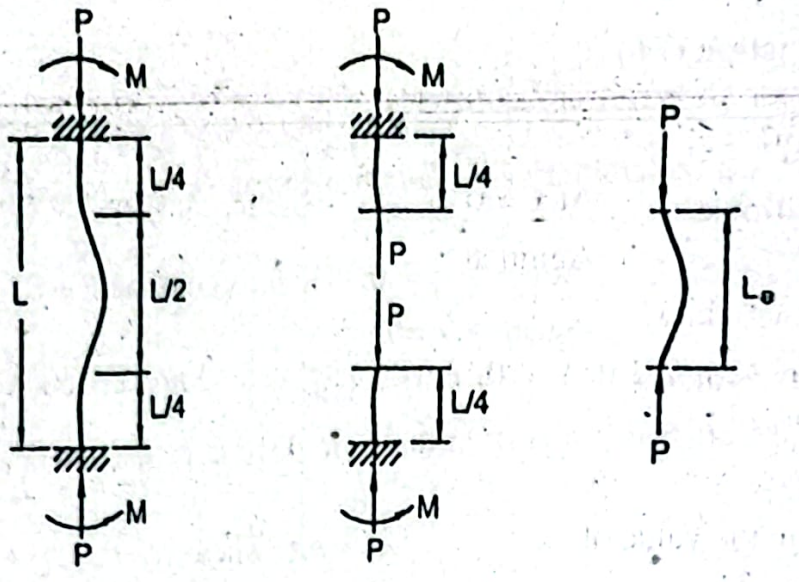

(a) (b) (c)

Figure 7.5: A Column with Fixed Ends.

A column with fixed ends is shown in Figure 7.5a. The column has two inflection po at the quarter points of its unsupported length due to symmetry. Since the bend moment is zero at the point of inflection, the free body diagrams may be made as sho in Figures 7.5b and 7.5c. In Figure 7.5c the middle half of the fixed end column equivalent to a hinged end column with an effective length of $L_e = L/2$. Substituting th in Equation (7.10), the critical load for a fixed end column can be found as,

$$P_{cr} = \frac{EI\pi^2}{L_e^2} = \frac{EI\pi^2}{\left(\frac{L}{2}\right)^2} = 4\frac{EI\pi^2}{L^2} \qquad (7.1$$

Equation (7.11) shows that the critical load is four times to that of the column wi hinged ends.

Figure 7.5a can also be used to find the critical load of a column with one end fixed an other end free (often called the *flag pole type of column*). The critical load on the colum with one end fixed and other end free as shown in Figure 7.5b and that on the column with fixed ends as shown in Figure 7.5a are equal, provided the column with fixed ends is four times as long as that of flag pole type. Hence by substituting an *effective length* L_e four times the actual length of a flag pole type column in Equation (7.11), the critical load on a flag pole type of column can be obtained as,

$$P_{cr} = 4\frac{EI\pi^2}{L^2} = 4\frac{EI\pi^2}{(4L)^2} = \frac{1}{4}\frac{EI\pi^2}{L^2} \qquad (7.12)$$

nother type of column is fixed at one end and hinged at other end as shown in Figure 6. For this column the point of inflection occurs at $0.707L$ from the hinged end, erefore, the critical load becomes,

$$P_{cr} = \frac{EI\pi^2}{L_e^2} = \frac{EI\pi^2}{(0.7L)^2} = 2\frac{EI\pi^2}{L^2} \qquad (7.13)$$

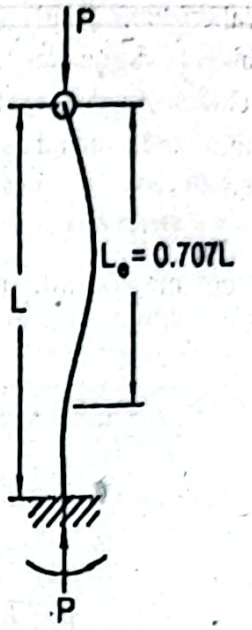

Figure 7.6: A Column with one End Fixed and other End Hinged.

w the generalized expression of the critical load of a column can be written as,

$$P_{cr} = N\frac{EI\pi^2}{L^2} = \frac{EI\pi^2}{(L_e)^2} \qquad (7.14)$$

lues of N or L_e can be obtained from the following Table 7.1 for the columns with ferent ends conditions.

ble 7.1: Values of N and Effective Length L_e.

End Condition	Number of times the strength of hinged column, N	Effective length, L_e
Fixed ends	4	$\frac{1}{2}L$
One end fixed, other end hinged	2	$0.7L$
Both ends hinged	1	L
One end fixed, other end free	$\frac{1}{4}$	$2L$

Question 7.3: Discuss the various limitations of Euler's Formula.

Answer:

In the column formulae the value of moment of inertia I is always the le cross-section of the column, since the buckling of column occurs about the *moment of inertia* of the cross-section of the column. In the direction of the moment of inertia the column is flexible.

From Euler's formula it can be noticed that the critical load does not de strength of material used, rather it depends on the dimensions of column and of elasticity. As a result two identical columns of different strength of materi the same critical load. For this reason to design an Euler's column with st ordinary structural steel should be chosen than high strength steel. It is also make the moment of inertia of column section as large as possible and for a g achieve that the material should be distributed as far as possible from the cer column.

Substituting Ak^2 for I in Euler's column formula in Equation (7.10), the equation is obtained,

$$P_{cr} = \frac{EI\pi^2}{L_e^2} = \frac{EAk^2\pi^2}{L_e^2}$$

This equation can be expressed as,

$$\sigma_{cr} = \frac{P_{cr}}{A} = \frac{\pi^2 E}{\left(\frac{L_e}{k}\right)^2}$$

where,

A = Cross-sectional area of column

k = Least radius of gyration

σ_{cr} = Critical stress

$\frac{P_{cr}}{A}$ = Unit load

$\frac{L_e}{k}$ = Slenderness ratio of column

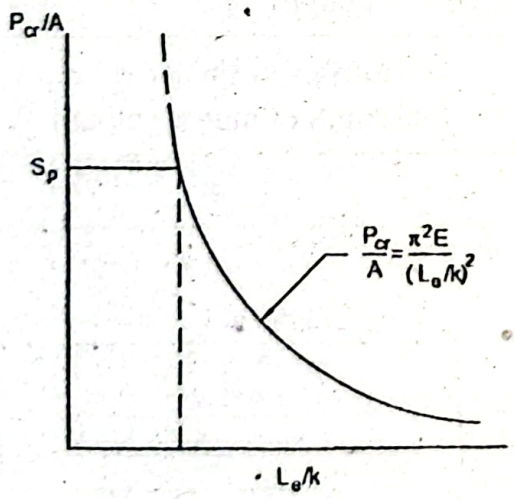

Figure 7.7: Validity of Euler's Formula up to Proportional Limit.

uler's formula contains the term modulus of elasticity E, as such this formula will be pplicable as long as the material behavior remains linearly elastic. Therefore, the stress eveloped during buckling should not exceed the proportional limit S_p (Figure 7.7). In her words if the unit load P_{cr}/A or stress goes above the proportional limit Euler's rmula becomes invalid. For the other end conditions equivalent length of a hinged olumn (effective length from Table 7.1) has to be substituted in Equation (7.15).

ne *actual column load* or the *working load* should always be lower than the critical load btained by column formula. A suitable *safety factor* is used to take care of that. The afety factor n is defined as,

$$n = \frac{P_{cr}}{P} \tag{7.16}$$

here,

$_r$ = Critical load

= Actual load or working load

suitable factor of safety is usually considered as 1.7 to 2.5.

uestion 7.5: Discuss Johnson's formula for intermediate column.

nswer:

r intermediate columns many empirical equations have been proposed till now. Of em the equation of J. B. Johnson and American Institute of Steel Construction (AISC) ecifications are widely used. From a large number of experimental results it is seen that lumn failure begins within a broad region around B (Figure 7.8a) before unit load $_r/A$ reaches the yield strength S_y. Moreover, it is observed that the test points obtained om the experiments are scattered.

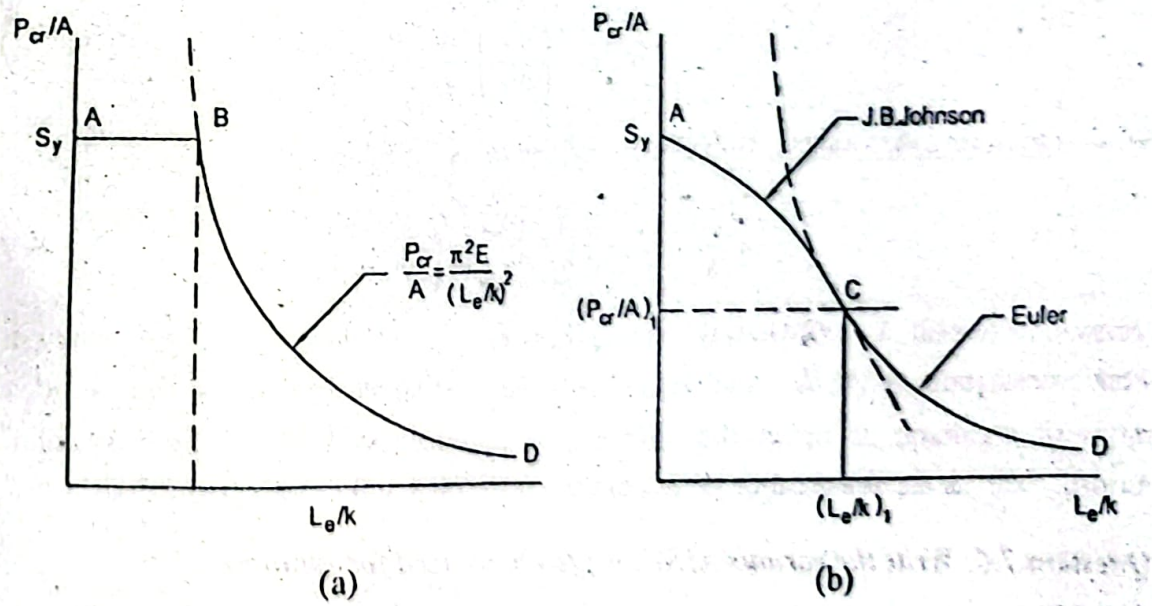

Figure 7.8: Variation of Unit Load with Slenderness Ratio.

o overcome some disadvantages of Euler's formula, many different column formulae cluding mostly empirical ones have been devised. Of them the parabolic formula by J. Johnson is used widely for the various machines and structural steel elements. This rmula is of the parabolic form as follows,

$$\frac{P_{cr}}{A} = a - b\left(\frac{L_e}{k}\right)^2$$

where, a and b are constants that are adjusted to make the formula to fit w experimental data. In Figure 7.8b both Johnson's and Euler's formulae are used, AC curve is for Johnson's formula and CD curve is for Euler's formula. Fol boundary conditions are used to obtain the values of constants a and b in Equation

At slenderness ratio $\frac{L_e}{k} = 0$, unit load $\frac{P_{cr}}{A} = S_y$, thus $a = S_y$.

The point C in Figure 7.8b is satisfied by both Johnson's and Euler's formulae. Thi C corresponds to the slenderness ratio $\left(\frac{L_e}{k}\right)_1$ and unit load $\left(\frac{P_{cr}}{A}\right)_1 = \frac{S_y}{2}$ and it .below the proportional limit. Considering $\left(\frac{P_{cr}}{A}\right)_1 = \frac{S_y}{2}$, the expression of slend ratio corresponding to the point C (Figure 7.8b) is obtained as,

$$\left(\frac{L_e}{k}\right)_1 = \sqrt{\frac{2\pi^2 E}{S_y}}$$

The term $(L_e/k)_1$ is often called the *limiting slenderness ratio* or *critical slende ratio*. Substituting these values in Equation (7.17),

$$\frac{S_y}{2} = S_y - b\frac{2\pi^2 E}{S_y}$$

$$\text{or, } b = \left(\frac{S_y}{2\pi}\right)^2 \frac{1}{E} \quad (7$$

Now substituting the value of b *Johnson's formula* is found as,

$$\frac{P_{cr}}{A} = S_y - \left(\frac{S_y}{2\pi}\right)^2 \frac{1}{E}\left(\frac{L_e}{k}\right)^2 \quad (7$$

Johnson's formula is used when the slenderness ratio of a column is less than the crit slenderness ratio of $(L_e/k)_1$ and Euler's formula (7.10) is used when the slender ratio of a column is higher than the critical slenderness ratio. Critical slender ratio $(L_e/k)_1$ is the demarcation point between Johnson's and Euler's formulae.

Question 7.6: Write the various AISC specifications used for columns.

Answer:

The American Institute of Steel Construction (AISC) provides the follow specifications for columns made of structural steel. The AISC uses the slenderne ratio $\left(\frac{L_e}{k}\right)_1$ in between the intermediate and long column as,

$$\left(\frac{L_e}{k}\right)_1 = \sqrt{\frac{2\pi^2 E}{S_y}}$$

This equation is same as Equation (7.18) used by J.B. Johnson. When the slenderness ratio $\frac{L_e}{k} \geq \left(\frac{L_e}{k}\right)_1$, then according to the specifications of AISC, the working stress is given by,

$$\sigma_w = \frac{12\pi^2 E}{23\left(\frac{L_e}{k}\right)^2} \tag{7.21}$$

It can be noted from this equation that this is *Euler's formula* with safety factor of 23/12 = 1.92. When $\frac{L_e}{k} \leq \left(\frac{L_e}{k}\right)_1$, then according to the AISC specifications, working stress is obtained from the parabolic formula,

$$\sigma_w = \left[1 - \frac{\left(\frac{L_e}{k}\right)^2}{2\left(\frac{L_e}{k}\right)_1^2}\right]\frac{S_y}{n} \tag{7.22}$$

where, n = Factor of safety. Factor of safety n is given by,

$$n = \frac{5}{3} + \frac{3\left(\frac{L_e}{k}\right)}{8\left(\frac{L_e}{k}\right)_1} - \frac{\left(\frac{L_e}{k}\right)^3}{8\left(\frac{L_e}{k}\right)_1^3} \tag{7.23}$$

It can be noted that at $\left(\frac{L_e}{k}\right)_1$, the value of n is 1.92 and it becomes smaller for the higher values of slenderness ratio. The variation of working stress σ_w with slenderness ratio $\left(\frac{L_e}{k}\right)$ is shown in Figure 7.9 for various grades of steel. It can be further noted that the equation for intermediate column by AISC is same as J. B. Johnson's column formula with addition of factor of safety.

For columns made of timber the National Lumber Manufacturers Association recommends a formula for working stress as,

$$\sigma_w = \frac{\pi^2 E}{2.727\left(\frac{L_e}{k}\right)^2} = \frac{3.619E}{\left(\frac{L_e}{k}\right)^2} \tag{7.24}$$

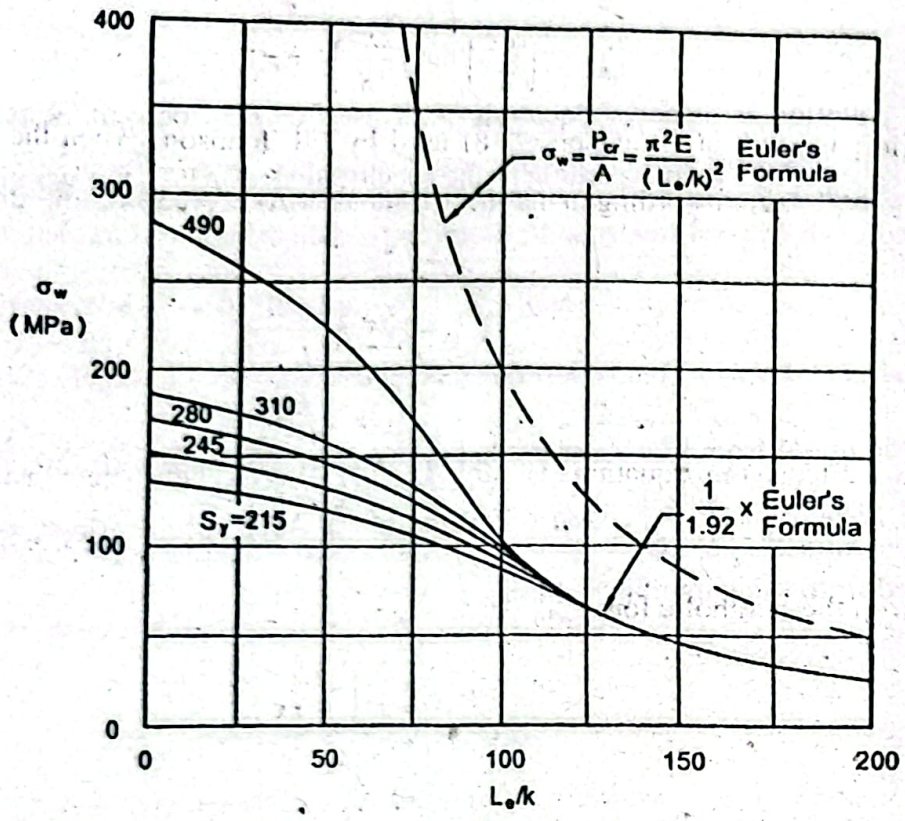

Figure 7.9: Variation of Working Stress with Slenderness Ratio for Various Grade Steel.

This equation (7.24) is obtained from Euler's formula with modification.

For a column with a rectangular cross-section having sides $d \leq b$, least radius of gyra is obtained as,

$$k^2 = \frac{I}{A} = \frac{(1/12)bd^3}{bd} = \frac{d^2}{12}$$

Substituting this value in Equation (7.24), working stress is expressed as,

$$\sigma_w = \frac{0.3E}{\left(\frac{L_e}{d}\right)^2} \qquad (7.$$

Question 7.7: Deduce Secant Formula.

Answer:

An eccentric load of P has been applied on the column with eccentricity of e (distanc between the line of action of P and the axis of column) as shown in Figure 7.10. Th couple M_A causes the bending of the column. The maximum deflection is y_{max} and y is deflection at a distance of x from the end A.

Moment due to eccentric loading is, $M_A = -Pe$

Moment due to deflection y is, $M' = -Py$

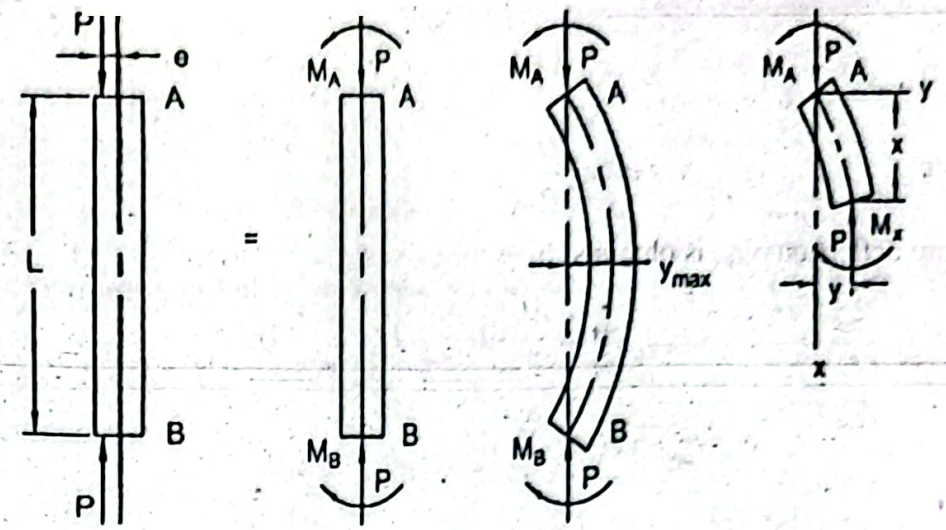

Figure 7.10: A Column with Eccentric Load.

Therefore, the moment applied at a distance x from the end A is,

$$M_x = -Py - Pe \tag{7.26}$$

According to the convention the moment is negative, since the column gives the convex shape in the positive y-direction. The equation of elastic curve is given by,

$$\frac{d^2y}{dx^2} = \frac{M}{EI} \tag{7.2}$$

Substituting the value of M from Equation (7.26),

$$\frac{d^2y}{dx^2} = -\frac{P}{EI}y - \frac{P}{EI}e \tag{7.27}$$

Now writing $\frac{P}{EI} = \lambda^2$, one obtains,

$$\frac{d^2y}{dx^2} + \lambda^2 y = -\lambda^2 e \tag{7.28}$$

Solution of Equation (7.28) is,

$$y = A\sin\lambda x + B\cos\lambda x - e \tag{7.29}$$

Constants A and B are obtained from the boundary conditions as follows:

At $x = 0$, $y = 0$, $B = e$

At $x = L$, $y = 0$, $\quad 0 = A\sin\lambda L + e\cos\lambda L - e$

$$\text{or, } A\sin\lambda L = e(1 - \cos\lambda L) \tag{7.30}$$

But we have, $\quad \sin\lambda L = 2\sin\frac{\lambda L}{2}\cos\frac{\lambda L}{2}$

$$\text{and, } 1 - \cos\lambda L = 2\sin^2\frac{\lambda L}{2}$$

Substituting these values in Equation (7.30), one finds,

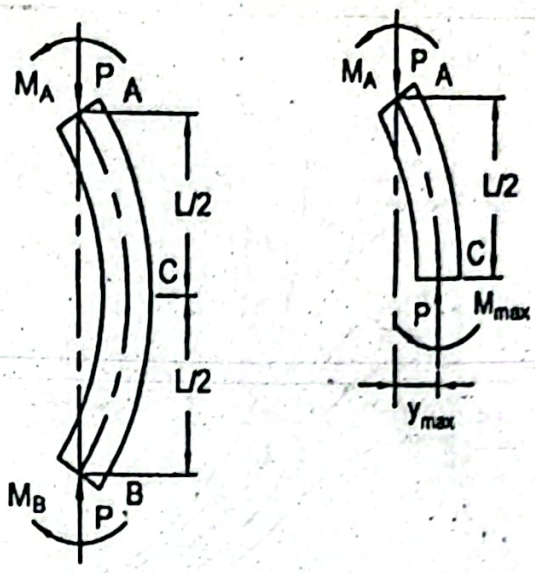

Figure 7.11: Column Showing Maximum Deflection.

Now substituting the value of y_{max} from Equation (7.33),

$$\sigma_{max} = \frac{P}{A}\left[1+\frac{ec}{k^2}\sec\left(\sqrt{\frac{P}{EI}}\frac{L}{2}\right)\right] \tag{7.39}$$

An alternate form may be obtained by inserting the value of y_{max} from Equation (7.36),

$$\sigma_{max} = \frac{P}{A}\left[1+\frac{ec}{k^2}\sec\frac{\pi}{2}\left(\sqrt{\frac{P}{P_{cr}}}\right)\right] \tag{7.40}$$

This Equation (7.40) can be used with any end conditions as long as the appropriate value is used for the critical load. It can be noted that σ_{max} does not vary linearly with the load P. Now writing $I = Ak^2$ in Equation (7.39) one obtains,

$$\sigma_{max} = \frac{P}{A}\left[1+\frac{ec}{k^2}\sec\left(\frac{1}{2}\sqrt{\frac{P}{AE}}\frac{L_e}{k}\right)\right] \tag{7.41}$$

$$\text{or, } \frac{P}{A} = \frac{\sigma_{max}}{1+\frac{ec}{k^2}\sec\left(\frac{1}{2}\sqrt{\frac{P}{AE}}\frac{L_e}{k}\right)} \tag{7.42}$$

where, the effective length L_e is used to make the formula applicable to the various end conditions. This formula is referred to as the *Secant formula*. It is necessary to solve a transcendental equation by trial and error to obtain the value of P/A.

Now writing maximum stress σ_{max} equal to yield strength S_y and replacing P by P_{cr} in Equation (7.42) one finds,

$$\frac{P_{cr}}{A} = \frac{S_y}{1+\frac{ec}{k^2}\sec\left(\frac{1}{2}\sqrt{\frac{P_{cr}}{AE}}\frac{L_e}{k}\right)} \tag{7.43}$$

$$A = e\tan\frac{\lambda L}{2}$$

Therefore, $$y = e(\tan\frac{\lambda L}{2}\sin\lambda x + \cos\lambda x - 1)$$

Maximum deflection y_{max} is obtained by setting $x = L/2$ in Equation (7.31),

$$y_{max} = e(\tan\frac{\lambda L}{2}\sin\frac{\lambda L}{2} + \cos\frac{\lambda L}{2} - 1)$$

$$\text{or, } y_{max} = e(\sec\frac{\lambda L}{2} - 1)$$

Now substituting the value of $\lambda = \sqrt{\frac{P}{EI}}$ in Equation (7.32),

$$y_{max} = e\left[\sec\left(\sqrt{\frac{P}{EI}}\frac{L}{2}\right) - 1\right]$$

It can be noted here that y_{max} will be infinite when,

$$\sqrt{\frac{P}{EI}}\frac{L}{2} = \frac{\pi}{2}$$

However, in reality the deflection can not be infinite, it nevertheless unacceptably large. The load P should not be allowed to reach the critical value for P from Equation (7.34),

$$P_{cr} = \frac{\pi^2 EI}{L^2}$$

This is identical to Euler's formula for axial load. Now solving for EI from (7.35) and substituting in Equation (7.33),

$$y_{max} = e\left(\sec\frac{\pi}{2}\sqrt{\frac{P}{P_{cr}}} - 1\right)$$

Bending stress will be maximum at the mid point C as shown in Figure 7.11. U concept of combined stress, the expression of maximum stress is obtained as,

$$\sigma_{max} = \frac{P}{A} + \frac{M_{max}c}{I}$$

Maximum bending moment is expressed as,

$$M_{max} = Py_{max} + Pe = P(y_{max} + e)$$

Substituting this value of M_{max} in Equation (7.37) and writing $I = Ak^2$,

$$\sigma_{max} = \frac{P}{A}\left[1 + \frac{(y_{max} + e)c}{k^2}\right]$$

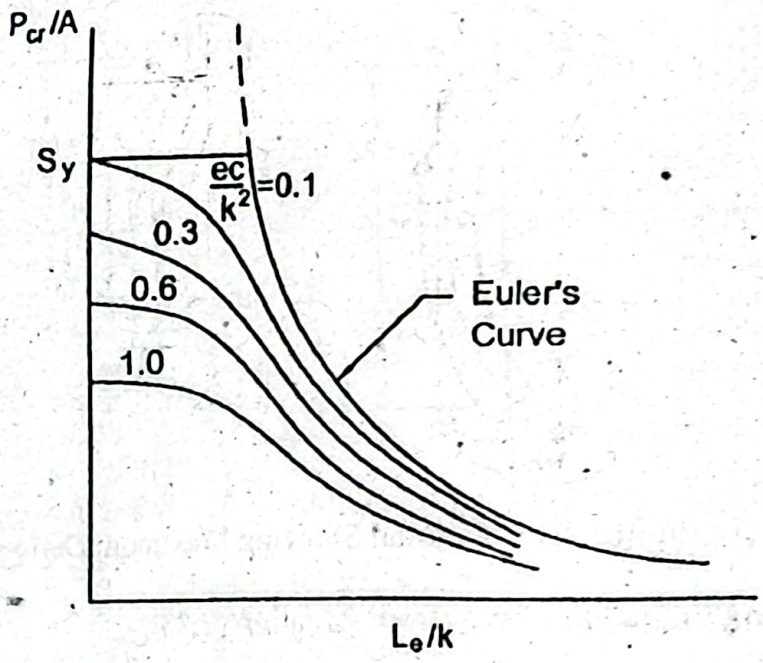

Figure 7.12: Variation of Unit Load with Slenderness Ratio for Various l
Ratios.

Equation (7.43) can be used for the design of a column with eccentric loac ec/k^2 is known as the eccentricity ratio. In Figure 7.12, variation of unit slenderness ratio for various eccentricity ratios has been shown. It can be noted the value of (L_e/k) is small, the value of secant becomes almost equal to 1, a Equation (7.43) reduces to,

$$\frac{P_{cr}}{A} = \frac{S_y}{1+\frac{ec}{k^2}}$$

Question 7.8: Give a short note on Maximum Stress Approach for an ecce loaded column.

Answer:

Columns are usually loaded axially. There are some columns which are subj eccentric loads. In Figure 7.13 a column is shown under the action of eccentric lo

In a column due to eccentric loading maximum compressive load can be written a

$$\sigma_{max} = \frac{P}{A} + \frac{Mc}{I}$$

Here the eccentric load P creates a central load as well as a couple $M = Pe$ accor the principle of mechanics and the maximum stress is composed of both the axi and the bending stress.

When a column supports a central load P_c in addition to the central load expression of maximum stress will be,

$$\sigma_{max} = \frac{\Sigma P}{A} + \frac{Mc}{I} = \frac{\Sigma P}{A} + \frac{Pe}{z} \qquad (7.46)$$

where, $z = I/c$ is the section modulus and $\Sigma P = P_c + P$.

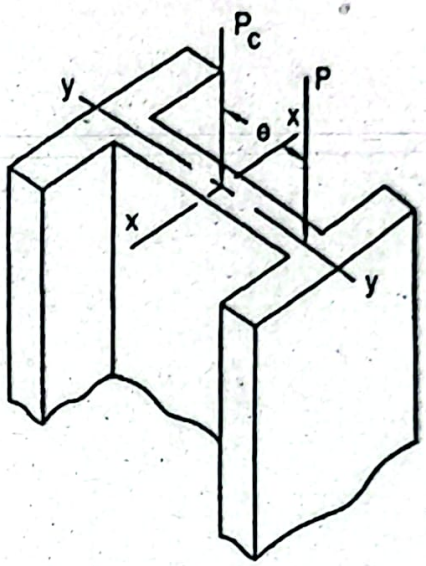

Figure 7.13: Column under Eccentric Loading.

n the *Maximum Stress Approach* $\sigma_{max} \leq \sigma_a$, where σ_a is the allowable stress obtained rom the column formula with a central load. Allowable stress in a column formula epends on the value of slenderness ratio. Least radius of gyration shall be used to obtain lenderness ratio. In Equation (7.46) I is the moment of inertia with respect to the axis bout which the eccentric load causes bending. In Figure 7.13 the value of I has to be ound about axis x-x and section modulus z has to be taken about this axis. This approach valid for the moderate slenderness ratio.

SOLVED PROBLEMS

roblem P7.1:

timber column with fixed ends has cross-section $100mm \times 150mm$. Find the minimum ngth at which Euler's formula can be used. Also find the safe axial load that can be rried with a factor of safety of 2.5 and length of $5m$. Modulus of elasticity E and roportional limit S_p are respectively $10GPa$ and $30MPa$.

iven Data:

ross-section $= 100mm \times 150mm$
ength of column, $L = 5m$
actor of safety, $n = 2.5$
roportional limit, $S_p = 30MPa$
lodulus of elasticity, $E = 10GPa$

o Find:

Minimum length, L
Central load, P

Solution:

Least value of moment of inertia, $I = \frac{1}{12} \times 150 \times 100^3 mm^4 = 12.5 \times 10^6 mm^4$

Cross-sectional area, $A = 100 \times 150 mm^2 = 15000 mm^2$

Least value of radius of gyration, $k = \sqrt{\frac{I}{A}} = \sqrt{\frac{12.5 \times 10^6}{15000}} mm = 28.87 mm$

We have Euler's formula,

$$\frac{P_{cr}}{A} = \frac{E\pi^2}{\left(\frac{L_e}{k}\right)^2}$$

$$\text{or, } 30 = \frac{10 \times 10^3 \times \pi^2}{\left(\frac{L_e}{k}\right)^2}$$

$$\text{or, } \frac{L_e}{k} = 57.36$$

This is the minimum value of slenderness ratio at which Euler's formula is val
Therefore, the minimum effective length of the column,

$$L_e = 57.36 \times 28.87 \times 10^{-3} m = 1.66m$$

For fixed end condition, the effective length,

$$L_e = \frac{L}{2}$$

Therefore, the required minimum length,

$$L = 2 \times L_e = 2 \times 1.66m = 3.32m \quad \textbf{Answer}$$

For fixed end condition, the effective length,

$$L_e = \frac{5}{2} m = 2.5m$$

Since the length of column $L = 5m > minimum\ length = 3.32m$, it is Euler's col

Critical load, $P_{cr} = nP = 2.5 \times P$

We have Euler's column formula for the critical load,

$$P_{cr} = \frac{EI\pi^2}{L_e^2}$$

Substituting the values, $$2.5P = \frac{10 \times 10^9 \times 12.5 \times 10^{-6} \times \pi^2}{(2.5)^2}$$

$$\text{or, } P = 78.96kN \quad \textbf{Answer}$$

Problem P7.2:

A $5m$ long pin ended timber column of square cross-section supports a central $150kN$ with a factor of safety of 2.5. If modulus of elasticity $E = 10GPa$ and al normal stress in compression parallel to the grain $\sigma_a = 20MPa$, determine dimension of the cross-section of column using Euler's formula.

ven Data:
ngth of column, $L = 5m$
ntral load, $P = 150kN$
ctor of safety, $n = 2.5$
llowable normal stress in compression, $\sigma_a = 20MPa$
odulus of elasticity, $E = 10GPa$

Find:
ide dimension of cross-section, b

lution:
e have Euler's formula for the critical load,

$$P_{cr} = \frac{EI\pi^2}{L_e^2} \qquad (i)$$

itical load, $P_{cr} = nP = 2.5 \times 150kN = 375kN$

r pin ends, the effective length, $L_e = L = 5m$

herefore, from Equation (i),

$$I = \frac{375 \times 10^3 \times 5^2}{10 \times 10^9 \times \pi^2} m^4 = 94.99 \times 10^6 mm^4$$

the side dimension of the cross-section is b, then,

$$I = \frac{b^4}{12}$$

herefore, $$\frac{b^4}{12} = 94.99 \times 10^6$$

or, $b = 183.74mm$

ow to check the normal stress in the column,

$$\sigma_{cr} = \frac{P_{cr}}{A} = \frac{375 \times 10^3}{(183.74)^2} MPa = 11.11MPa$$

is stress, $\sigma_{cr} < \sigma_a$

erefore, the required side dimension of the cross-section,

$b = 183.74mm$ *Answer*

oblem P7.3:
timber column with fixed ends has cross-section $b \times h$ such that $h = 2b$. If the column ries an axial load of $100kN$ with a factor of safety of 2.0 and length of $4.0m$, termine the dimensions b. Consider proportional limit $S_p = 30MPa$ and modulus of sticity $E = 10GPa$.

ven Data:
ngth of column, $L = 4m$
ial load, $P = 100kN$
ctor of safety, $n = 2$
portional limit, $S_p = 30MPa$

Modulus of elasticity, $E = 10GPa$

To Find:

- Dimension, b

Solution:

Critical load, $P_{cr} = nP = 2.0 \times 100kN = 200kN$

For the fixed ends, the effective length,

$$L_e = L/2 = 4/2m = 2m$$

We have Euler's formula for the critical load,

$$P_{cr} = \frac{EI\pi^2}{L_e^2}$$

Substituting values, $200 \times 10^3 = \frac{10 \times 10^9 \times I \times \pi^2}{2^2}$

or, $I = 8.11 \times 10^{-6} m^4$

Least moment of inertia, $I = \frac{1}{12} \times h \times b^3 = \frac{1}{12} \times 2b \times b^3 = \frac{b^4}{6}$

Therefore, $\frac{b^4}{6} = 8.11 \times 10^6 mm^4$

or, $b = 83.52mm$

Cross-sectional area, $A = b \times h = 83.52 \times 83.52 \times 2mm^2 = 13951.18mm^2$

Therefore, the least radius of gyration,

$$k = \sqrt{\frac{I}{A}} = \sqrt{\frac{8.11 \times 10^6}{13951.18}}\ mm = 24.11mm$$

Slenderness ratio, $\frac{L_e}{k} = \frac{2 \times 10^3}{24.11} = 82.95$

We have Euler's formula, $\frac{P_{cr}}{A} = \frac{E\pi^2}{\left(\frac{L_e}{k}\right)^2}$

or, $30 = \frac{10 \times 10^3 \times \pi^2}{\left(\frac{L_e}{k}\right)^2}$

or, $\frac{L_e}{k} = 57.36$

Since the slenderness ratio of the column $\frac{L_e}{k}(= 82.95)$ is greater than the slenderness ratio $\frac{L_e}{k}(= 57.36)$ corresponding to the proportional limit at which formula is valid, therefore, the required dimension, $b = 83.52mm$ ***Answer***

Problem P7.4:

Each of two columns is made by securely nailing together four planks of $40mm \times 160mm$ cross-section in two arrangements, one is hollow and one is solid as shown in Figure P7.4. If the effective length of each column is $4m$, determine the ratio of buckling loads between the hollow and solid columns. Consider proportional limit $S_p = 30MPa$ and modulus of elasticity $E = 10GPa$.

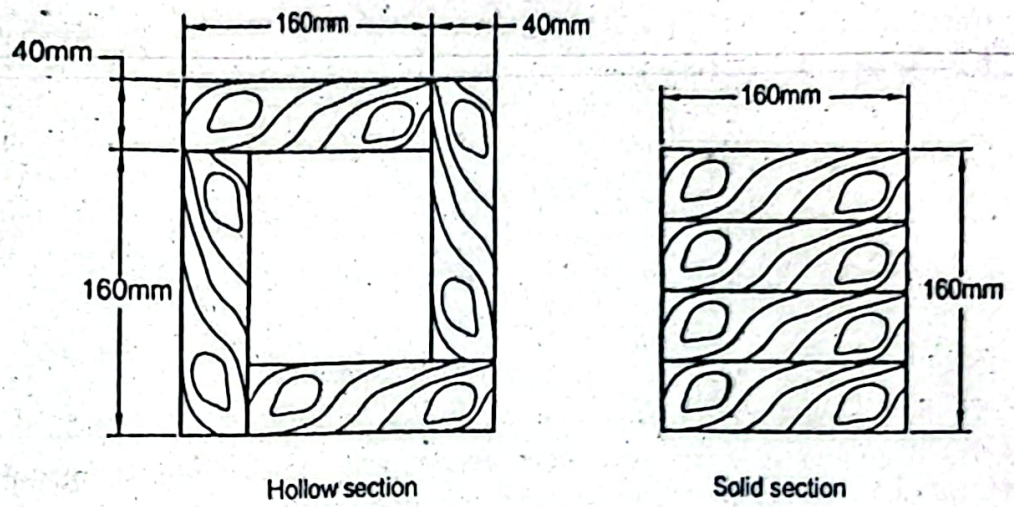

Figure P7.4

Given Data:

Plank section, $= 40mm \times 160mm$

Effective length, $L_e = 4m$

Proportional limit, $S_p = 30MPa$

Modulus of elasticity, $E = 10GPa$

To Find:

Ratio of buckling loads, $(P_{cr})_h / (P_{cr})_s$

Solution:

Moment of inertia of the hollow section,

$$I_h = \frac{1}{12}\left[200^4 - 120^4\right] mm^4 = 116.05 \times 10^6 \, mm^4$$

Moment of inertia of the solid section,

$$I_s = \frac{160^4}{12} mm^4 = 54.61 \times 10^6 \, mm^4$$

Cross-sectional area of each column,

$$A = 160 \times 40 \times 4 mm^2 = 25600 mm^2$$

Radius of gyration of the hollow column,

$$k_h = \sqrt{\frac{I_h}{A}} = \sqrt{\frac{116.05 \times 10^6}{25600}} = 67.33$$

Radius of gyration of the solid column,

$$k_s = \sqrt{\frac{I_s}{A}} = \sqrt{\frac{54.61 \times 10^6}{25600}} = 46.19$$

Therefore, the slenderness ratio of the hollow column,

$$\left(\frac{L_e}{k}\right)_h = \frac{4\times10^3}{67.33} = 59.41$$

And the slenderness ratio of the solid column,

$$\left(\frac{L_e}{k}\right)_s = \frac{4\times10^3}{46.19} = 86.60$$

We have from Euler's formula,

$$\frac{P_{cr}}{A} = \frac{E\pi^2}{(L_e/k)^2}$$

$$\text{or, } 30 = \frac{10\times10^3\times\pi^2}{(L_e/k)^2}$$

$$\text{or, } \frac{L_e}{k} = 57.36$$

This is the minimum value of slenderness ratio at which Euler's formu
Therefore, the slenderness ratios of both the hollow and solid columns are
the minimum value of 52.36. As a result, Euler's formula can be used f
columns. Therefore, we find for the critical loads,

$$(P_{cr})_h = \frac{EI_h\pi^2}{L_e^2}$$

and

$$(P_{cr})_s = \frac{EI_s\pi^2}{L_e^2}$$

Dividing Equation (i) by Equation(ii),

$$\frac{(P_{cr})_h}{(P_{cr})_s} = \frac{I_h}{I_s} = \frac{116.05\times10^6}{54.61\times10^6} = 2.13$$

That is, the required ratio, $(P_{cr})_h/(P_{cr})_s = 2.13$ ***Answer***

Problem P7.5:

A pin ended column of circular cross-section having diameter of $100mm$ is su
an axial load. Determine the minimum length at which Euler's formula is v
determine the buckling load for this minimum length. Consider proporti
$S_p = 240MPa$ and modulus of elasticity $E = 200GPa$.

Given Data:

Diameter of column, $d = 100mm$

Proportional limit, $S_p = 240MPa$

Modulus of elasticity, $E = 200GPa$

To Find:

- Minimum length, L
- Buckling load, P_{cr}

Solution:

We have Euler's formula for the critical load,

$$\frac{P_{cr}}{A} = \frac{E\pi^2}{\left(\frac{L_e}{k}\right)^2}$$

$$\text{or, } 240 = \frac{200\times10^3\times\pi^2}{\left(\frac{L_e}{k}\right)^2}$$

$$\text{or, } \frac{L_e}{k} = 90.69$$

This is the minimum value of the slenderness ratio at which Euler's formula is valid.

Radius of gyration, $k = \frac{d}{4} = \frac{100}{4} mm = 25mm$

Therefore, the effective length, $L_e = 90.69\times25\times10^{-3} m = 2.27m$

For pin ended column, the length of the column, $L = L_e = 2.27m$

That is, the minimum length of the column, $L = 2.27m$ ***Answer***

Euler's formula for the buckling load,

$$P_{cr} = \frac{EI\pi^2}{L_e^2} = \frac{200\times10^9\times\frac{\pi}{64}\times100^4\times10^{-12}\times\pi^2}{(2.27)^2}$$

$$= 1880.39kN \text{ Answer}$$

Problem P7.6:

A $15m$ column with fixed ends supports an axial load of $750kN$ with a factor of safety of 2.0. Select the lightest W shape required for this column if the proportional limit $S_p = 240MPa$ and modulus of elasticity $E = 200GPa$.

Given Data:

Length of column, $L = 15m$

Axial load, $P = 750kN$

Factor of safety, $n = 2.0$

Proportional limit, $S_p = 240MPa$

Modulus of elasticity, $E = 200GPa$

To Find:

Lightest W shape

Solution:

We have Euler's formula for the critical load,

$$P_{cr} = \frac{EI\pi^2}{L_e^2} \qquad (i)$$

Critical load, $P_{cr} = nP = 2\times750kN = 1500kN$

For fixed ends, the effective length, $L_e = \frac{L}{2} = \frac{15}{2} m = 7.5m$

Therefore, from Equation (i), $I = \frac{P_{cr} L_e^2}{E\pi^2} = \frac{1500 \times 10^3 \times 7.5^2}{200 \times 10^9 \times \pi^2} m^4$

$= 4.274 \times 10^{-5} m^4 = 42.74 \times 10^6 mm^4$

We have Euler's formula, $\frac{P_{cr}}{A} = \frac{E\pi^2}{\left(\frac{L_e}{k}\right)^2}$

or, $240 = \frac{200 \times 10^3 \times \pi^2}{\left(\frac{L_e}{k}\right)^2}$

or, $\frac{L_e}{k} = 90.69$

This is the minimum value of the slenderness ratio at which Euler's formula i

For Euler's formula to be valid, $\frac{L_e}{k} \geq 90.69$

or, $\frac{7.5 \times 10^3}{k} \geq 90.69$

or, $k \leq 82.7mm$

Moment of inertia, $I \geq 42.74 \times 10^6 mm^4$

To satisfy this condition from Table (Appendix A7) we select the lighte $W250 \times 80$ having the least $I = 43.10 \times 10^6 mm^4$ and the least $k = 65.0mm$ A.

Problem P7.7:

A $10m$ long steel column with hinged ends carries an axial load of $250kN$ v of safety of 2.0. Select the lightest W shape needed for this column if the p limit $S_p = 200MPa$ and modulus of elasticity $E = 200GPa$.

Given Data:

Length of column, $L = 10m$

Factor of safety, $n = 2.0$

Proportional limit, $S_p = 200MPa$

Modulus of elasticity, $E = 200GPa$

To Find:

- Lightest W shape

Solution:

We have Euler's formula for the critical load,

$$P_{cr} = \frac{EI\pi^2}{L_e^2}$$

Critical load, $P_{cr} = nP = 2 \times 250kN = 500kN$

For the hinged ends, the effective length,

$$L_e = L = 10m$$

Therefore, moment of inertia from Equation(i),

$$I = \frac{P_{cr}L_e^2}{E\pi^2} = \frac{500\times10^3\times10^2}{200\times10^9\times\pi^2}m^4$$

$$= 25.33\times10^{-6}m^4 = 25.33\times10^6 mm^4$$

We also have Euler's formula, $\frac{P_{cr}}{A} = \frac{E\pi^2}{\left(\frac{L_e}{k}\right)^2}$

or, $200 = \frac{200\times10^3\times\pi^2}{\left(\frac{L_e}{k}\right)^2}$

or, $\frac{L_e}{k} = 99.35$

This is the minimum value of the slenderness ratio at which Euler's formula is valid.

For Euler's formula to be valid, $\frac{L_e}{k} \geq 99.35$

or, $\frac{10\times10^3}{k} \geq 99.35$

or, $k \leq 100.65mm$

Moment of inertia, $I \geq 25.33\times10^6 mm^4$

To satisfy this condition from Table (Appendix A7) we select the lightest W shape $W200\times71$ having the least $I = 25.4\times10^6 mm^4$ and the least $k = 52.8mm$ ***Answer***

Problem P7.8:

A hollow circular steel column with fixed ends has outside diameters of $50mm$ and inside diameter of $25mm$. It is subjected to a central load. Determine the minimum length at which Euler's formula can be used if modulus of elasticity E and proportional limit S_p are respectively $200GPa$ and $240MPa$. What safe central load can be carried with a factor of safety of 2 if the length is $4m$?

Given Data:

Outside diameter, $d_o = 50mm$

Inside diameter, $d_i = 25mm$

Length of column, $L = 4m$

Factor of safety, $n = 2.0$

Proportional limit, $S_p = 240MPa$

Modulus of elasticity, $E = 200GPa$

To Find:

- Minimum length, L
- Safe central load, P

Solution:

Moment of inertia, $I = \frac{\pi}{64}(d_o^4 - d_i^4)$

$= \frac{\pi}{64}(50^4 - 25^4)mm^4 = 28.76 \times 10^4 mm^4$

Cross-sectional area, $A = \frac{\pi}{4}(d_o^2 - d_i^2)$

$= \frac{\pi}{4}(50^2 - 25^2)mm^2 = 1473mm^2$

Radius of gyration, $k = \sqrt{\frac{I}{A}} = \sqrt{\frac{28.76 \times 10^4}{1473}}mm = 13.97mm$

We have Euler's formula for the critical load,

$$\frac{P_{cr}}{A} = \frac{E\pi^2}{\left(\frac{L_e}{k}\right)^2}$$

$$\text{or, } 240 = \frac{200 \times 10^3 \times \pi^2}{\left(\frac{L_e}{k}\right)^2}$$

$$\text{or, } \frac{L_e}{k} = 90.69$$

This is the minimum value of the slenderness ratio at which Euler's formula is vali

Therefore, the effective length, $L_e = 90.69 \times 13.97 \times 10^{-3} m = 1.27m$

For the fixed end condition, $L = 2L_e = 2 \times 1.27m = 2.54m$ ***Answer***

We have Euler's formula for the critical load,

$$P_{cr} = \frac{EI\pi^2}{L_e^2}$$

Effective length $L_e = \frac{L}{2}$ for the fixed end condition,

$$\text{or, } L_e = \frac{4}{2}m = 2m$$

This value is higher than the minimum value for Euler column.

Critical load, $P_{cr} = nP = 2P$

Substituting these values in Equation (i),

$$2P = \frac{200 \times 10^9 \times 28.76 \times 10^{-8} \times \pi^2}{2^2} \times 10^{-3}$$

$$\text{or, } P = 70.96kN \text{ } Answer$$

Problem P7.9:

A column is made of solid circular section and another one is made of hollow cir section having its outside diameter twice to its inside diameter. End condition, effe

length and weight of both the columns are same. Determine the per cent increase in the central load capacity of the hollow column compared to the solid one using Euler's formula if the material for both the columns is same.

Given Data:

Effective length of both columns, L_e is same

Weight of both columns is same

Material of both columns is same

End condition for both columns is same

To Find:

- Per cent increase in central load capacity

Solution:

Critical loads from Euler's column, $$P_{cr_1} = \frac{EI_1\pi^2}{L_e^2} \qquad (i)$$

$$P_{cr_2} = \frac{EI_2\pi^2}{L_e^2} \qquad (ii)$$

where, P_{cr_1} = Critical load for solid column

I_1 = Moment of inertia for solid column

P_{cr_2} = Critical load for hollow column

I_2 = Moment of inertia for hollow column

Dividing Equation *(ii)* by Equation*(i)*,

$$\frac{P_{cr_2}}{P_{cr_1}} = \frac{I_2}{I_1} \qquad (iii)$$

Since weight of each column is same, $\rho A_1 L = \rho A_2 L$

or, $A_1 = A_2$

or, $\frac{\pi}{4}\left(d^2\right) = \frac{\pi}{4}\left(d_o^2 - d_i^2\right)$ *(iv)*

where, d = Diameter of solid column

d_o = Outside diameter of hollow column

d_i = Inside diameter of hollow column

We have, $d_o = 2d_i$

Substituting in Equation*(iv)*, $d^2 = \left(2d_i\right)^2 - d_i^2 = 3d_i^2$

or, $d_i = \frac{d}{\sqrt{3}}$

and, $d_o = 2d_i = \frac{2d}{\sqrt{3}}$

Moment of inertia of the solid column, $I_1 = \frac{\pi}{64}d^4$

Moment of inertia of the hollow column, $I_2 = \frac{\pi}{64}\left(d_o^4 - d_i^4\right)$

$$= \frac{\pi}{64}\left[\left(\frac{2d}{\sqrt{3}}\right)^4 - \left(\frac{d}{\sqrt{3}}\right)^4\right]$$

$$= \frac{\pi}{64} \times \frac{15d^4}{9}$$

Substituting these values in Equation *(iii)*,

$$\frac{P_{cr_2}}{P_{cr_1}} = \frac{\frac{\pi}{64} \times \frac{15d^4}{9}}{\frac{\pi}{64}d^4} = \frac{15}{9}$$

$$\text{or, } \frac{P_{cr_2} - P_{cr_1}}{P_{cr_1}} = \frac{15-9}{9} = \frac{6}{9}$$

Therefore, the required per cent increase in the central load,

$$= \frac{P_{cr_2} - P_{cr_1}}{P_{cr_1}} \times 100 = \frac{6 \times 100}{9} = 66.67 \text{ Ans}$$

Problem P7.10:

Determine the largest length L for a column made of *S130×15 Section* with both hinged, if the column supports a central load of *75kN* with a factor of safety of Consider modulus of elasticity $E = 200GPa$ and yield strength $S_y = 360MPa$.

Given Data:

Section of column = *S130×15*

Central load, $P = 75kN$

Factor of safety, $n = 2.0$

Yield strength, $S_y = 360MPa$

Modulus of elasticity, $E = 200GPa$

To Find:

- Largest length, L

Solution:

Properties of *S130×15 Section* from Table (Appendix A8) are:

$A = 1890mm^2$

$K_y = 16.4mm$

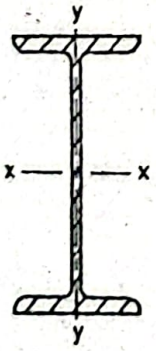

Here *y-y* axis is the weaker axis.

Limiting slenderness ratio, $\left(\frac{L_e}{k}\right)_l = \sqrt{\frac{2\pi^2 E}{S_y}} = \sqrt{\frac{2\pi^2 \times 200 \times 10^3}{360}} = 104.72$

Let us assume that slenderness ratio of the column,

$$\frac{L_e}{k} > \left(\frac{L_e}{k}\right)_l$$

Then from Euler's column formula, $\frac{P_{cr}}{A} = \frac{E\pi^2}{\left(\frac{L_e}{k}\right)^2}$ (Here $P_{cr} = nP$)

$$\text{or, } \frac{2 \times 75 \times 10^3}{1890} = \frac{200 \times 10^3 \times \pi^2}{\left(\frac{L_e}{k}\right)^2}$$

$$\text{or, } \frac{L_e}{k} = 157.71$$

That is, slenderness ratio of the column,

$$\frac{L_e}{k} > \left(\frac{L_e}{k}\right)_l$$

Therefore, the column formula used is correct. Now to find the effective length,

$$\frac{L_e}{k} = 157.71$$

$$\text{or, } L_e = 157.71 \times 16.4mm = 2.59 \times 10^3 mm$$

$$\text{or, } L_e = 2.59m$$

For both ends hinged, the length of the column, $L = L_e = 2.59m$ ***Answer***

Problem P7.11:

An Euler's column is fabricated from two rolled steel channels $C150 \times 16$ by welding back to back as shown in Figure P7.11. If the effective length of the column is $4.5m$, determine the allowable central load that can be carried with a factor of safety of 2.5. Consider modulus of elasticity $E = 200GPa$.

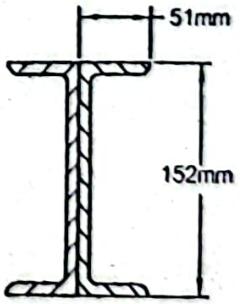

Figure P7.11

Given Data:

Section of column = $C150 \times 16$

Effective length of column, $L_e = 4.5m$

Factor of safety, $n = 2.5$

Modulus of elasticity, $E = 200GPa$

To Find:

- Allowable central load, P

Solution:

Properties of channel $C150\times16$ *Section* from Table (Appendix A9) are as follow

$I_x = 6.22\times10^6\ mm^4$

$I_y = 0.351\times10^6\ mm^4$

$x = 12.6mm$

$A = 1980mm^2$

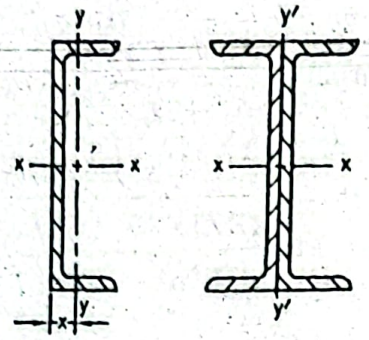

When two channels are welded together, then

$$I_x = 2\times6.22\times10^6\ mm^4$$

$$= 12.44\times10^6\ mm^4$$

$$\text{and, } I'_y = 2\left[0.351\times10^6 + 1980\times12.6^2\right]mm^4$$

$$= 1.33\times10^6\ mm^4$$

Since here, $I'_y < I_x$, least moment of inertia, $I = I'_y$.

Critical load, $P_{cr} = nP = 2.5P$

We have the critical load from Euler's formula,

$$P_{cr} = \frac{EI\pi^2}{L_e^2}$$

Therefore, $$2.5P = \frac{200\times10^9\times1.33\times10^{-6}\times\pi^2}{(4.5)^2}\times10^{-3}$$

or, $P = 51.86kN$ *Answer*

Problem P7.12:

An Euler's column is made by welding two $C150\times16$ rolled steel channels togeth shown in Figure P7.12. If the effective length of the column is $4.5m$ and factor of s is 2.5, determine the allowable central load that can be supported by the col Consider $E = 200GPa$.

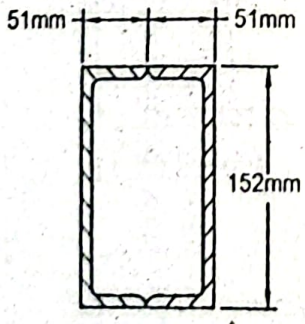

Figure P7.12

Given Data:

Section of column = $C150\times16$

Effective length of column, $L_e = 4.5m$

Factor of safety, $n = 2.5$

Modulus of elasticity, $E = 200GPa$

To Find:

- Allowable central load, P

Solution:

Properties of channel $C150\times16$ *Section* from Table (Appendix A9) are as follows:

$I_x = 6.22\times10^6\ mm^4$

$I_y = 0.351\times10^6\ mm^4$

$x = 12.6mm$

$A = 1980mm^2$

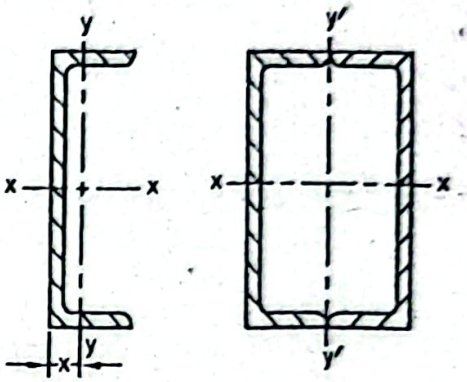

When two channels are welded together to make the box section,

$$I_x = 2\times6.22\times10^6\ mm^4$$

$$= 12.44\times10^6\ mm^4$$

and, $$I'_y = 2\left[0.351\times10^6 + 1980\times(51-12.6)^2\right]mm^4$$

$$= 6.54\times10^6\ mm^4$$

Since, $I'_y < I_x$, least moment of inertia, $I = I'_y$.

Critical load, $P_{cr} = nP = 2.5P$

Substituting this value in Euler's formula for the critical load, we obtain,

$$2.5P = \frac{EI\pi^2}{L_e^2}$$

or, $$2.5P = \frac{200\times10^9\times6.54\times10^{-6}\times\pi^2}{(4.5)^2}\times10^{-3}$$

or, $P = 2.55kN$ *Answer*

Problem P7.13:

A pin ended column is fabricated from two $C250\times45$ steel channels together as shown in Figure P7.13 such that moment of inertia remains same about the principal axes. Determine the minimum length of the column at which Euler's formula can be used. Modulus of elasticity E and proportional limit S_p are respectively $200GPa$ and $240MPa$. What safe central load can be carried for a safety factor of 3.0 and length of $10m$?

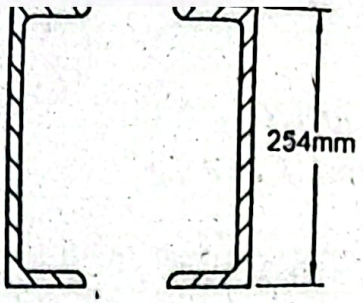

Figure P7.13

Given Data:

Section of column = $C\,250\times45$

Length of column, $L = 10m$

Factor of safety, $n = 3.0$

Proportional limit, $S_p = 240MPa$

Modulus of elasticity, $E = 200GPa$

To Find:

- Minimum length of column for Euler's formula, L
- Safe central load, P

Solution:

Properties of channel $C250\times45$ *Section* from Table (Appendix A9) are as follo

$$I_x = 42.8\times10^6\ mm^4$$

$$I_y = 1.60\times10^6\ mm^4$$

$$A = 5670mm^2$$

When the two channels will be latticed together,

$$I_x = 2\times42.8\times10^6\ mm^4 = 85.6\times10^6\ mm^4 = I$$

Since the moment of inertia will remain same about the principal axes, therefore channels have to be placed in such a way that I_x will be equal to I_y. When channels are placed in contact with each other I_y becomes less than I_x. There are placed at some distance as shown in the above figure to achieve same m inertia.

Cross-sectional area, $A = 2\times5670mm^2 = 11340mm^2$

Therefore, radius of gyration, $k = \sqrt{\dfrac{I}{A}} = \sqrt{\dfrac{85.6\times10^6}{11340}}mm = 86.88mm$

We have Euler's formula, $\dfrac{P_{cr}}{A} = \dfrac{E\pi^2}{\left(\dfrac{L_e}{k}\right)^2}$

$$\text{or, } 240 = \frac{200\times10^3\times\pi^2}{\left(\dfrac{L_e}{k}\right)^2}$$

$$\text{or, } \frac{L_e}{k} = 90.69$$

This is the minimum value of the slenderness ratio at which Euler's formula is valid.

Effective length, $L_e = 90.69 \times 86.88 \times 10^{-3} m = 7.88m$

For pinned end condition, $L = L_e = 7.88m$ *Answer*

We have the critical load from Euler's formula,

$$P_{cr} = \frac{EI\pi^2}{L_e^2}$$

Critical load using safety factor,

$$P_{cr} = nP = 3.0P$$

For pinned end condition, $L_e = L = 10m$

Therefore, $$3.0P = \frac{200 \times 10^9 \times 85.6 \times 10^{-6} \times \pi^2}{(10)^2} \times 10^{-3}$$

$$\text{or, } P = 563.23kN \text{ Answer}$$

Problem P7.14:

A truss is constructed from the steel members each of *20mm* diameter as shown in Figure P7.14. Using Euler's column formula, determine the largest load *P* that can be applied if the safety factor is *2.0*. Consider only the buckling effect in the plane of truss. Modulus of elasticity is *200GPa*.

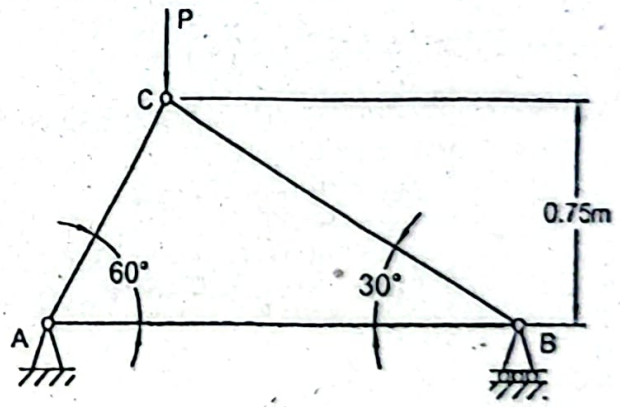

Figure P7.14

Given Data:

Diameter of each member, $d = 20mm$

Factor of safety, $n = 2.0$

Modulus of elasticity, $E = 200GPa$

To Find:

- Largest load, P

Solution:

Let us consider the joint C as shown below.

In static equilibrium condition,

$$+\rightarrow \sum F_x = 0:$$

$$\text{or, } P_{AC} \sin 30^0 - P_{BC} \sin 60^0 = 0$$

or, $P_{AC}\sin 30^0 = P_{BC}\sin 60^0$

or, $P_{AC} = 1.732P_{BC}$

$+\uparrow \sum F_y = 0:$

or, $-P + P_{AC}\cos 30^0 + P_{BC}\cos 60^0 = 0$

or, $-P + 1.732P_{BC}\cos 30^0 + P_{BC}\cos 60^0 = 0$

or, $P_{BC} = 0.5P(C)$

Therefore, $P_{AC} = 1.732 \times 0.5P = 0.866P(C)$

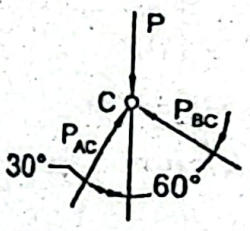

Now considering the joint B as follows,

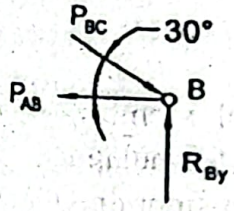

$+\rightarrow \sum F_x = 0:$

or, $P_{BC}\cos 30^0 - P_{AB} = 0$

or, $P_{AB} = 0.433P(T)$

Since P_{AB} is in tension, therefore, the member AB is not considered for buckling.

Length of member BC, $L_{BC} = \dfrac{0.75}{\sin 30^0} = 1.5m$

Length of member AC, $L_{AC} = \dfrac{0.75}{\sin 60^0} = 0.866m$

We have Euler's formula, $P_{cr} = \dfrac{EI\pi^2}{L_e^2}$

Let us consider member BC,

Critical load, $P_{cr} = nP_{BC} = 2 \times 0.5P = 1.0P\ N$

Moment of inertia, $I = \dfrac{\pi}{64}d^4 = \dfrac{\pi}{64}(20)^4\ mm^4 = 7854mm^4$

Effective length, $L_e = L_{BC} = 1.5m$

Here the end condition is pinned.

Substituting in Equation(i), $P = \dfrac{200 \times 10^9 \times 7854 \times 10^{-12} \times \pi^2}{(1.5)^2} \times 10^{-3}$

or, $P = 6.89kN$

Now considering member AC,

Critical load, $P_{cr} = nP_{AC} = 2 \times 0.866P = 1.732P\ N$

Effective length, $L_e = L_{AC} = 0.866m$ (for pinned end condition)

Substituting in Equation(i), $1.732P = \dfrac{200 \times 10^9 \times 7854 \times 10^{-12} \times \pi^2}{(0.866)^2}$

or, $P = 11.94kN$

Therefore, the required largest load, $P = 6.89kN$ *Answer*

Problem P7.15:

A truss is considered from $50mm \times 50mm$ square steel members as shown in Figure P7.15. Using AISC specifications, determine the largest load P that can be applied. Consider only the buckling effect in the plane of truss. Use modulus of elasticity $E = 200GPa$ and yield strength $S_y = 360MPa$.

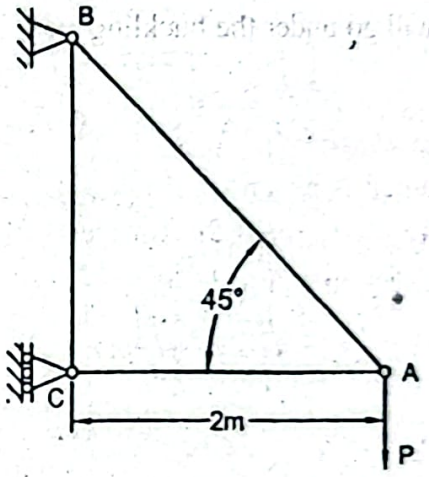

Figure P7.15-

Given Data:

Cross-section of each member $= 50mm \times 50mm$

Yield strength, $S_y = 360MPa$

Modulus of elasticity, $E = 200GPa$

To Find:

- Largest load, P

Solution:

Let us consider the joint A in the figure below.

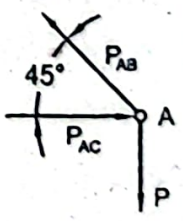

In static equilibrium condition,

$$+\uparrow \sum F_y = 0:$$

or, $P_{AB} \sin 45^0 - P = 0$

$$\text{or, } P_{AB} = \frac{P}{\sin 45^0} = 1.414P\,kN\,(T)$$

$$+\rightarrow \sum F_x = 0:$$

$$\text{or, } P_{AC} - P_{AB}\cos 45^0 = 0$$

$$\text{or, } P_{AC} = P_{AB}\cos 45^0 = 1.414P\cos 45^0 = P\,kN$$

Now considering the joint C in the following figure,

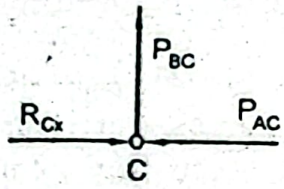

$$+\uparrow \sum F_y = 0: \qquad P_{BC} = 0$$

Therefore, only member AC will go under the buckling effect.

Limiting slenderness ratio, $\left(\frac{L_e}{k}\right)_l = \sqrt{\frac{2\pi^2 E}{S_y}} = \sqrt{\frac{2\pi^2 \times 200\times 10^3}{360}} = 104.$

In a truss each member is assumed as pin ended.

Therefore, the effective length, $L_e = L = 2m$ for member AC

Radius of gyration of a square section with side b,

$$k = \frac{b}{\sqrt{12}} = \frac{50}{\sqrt{12}}mm = 14.43mm$$

Slenderness ratio, $\frac{L_e}{k} = \frac{2\times 10^3}{14.43} = 138.60$

That is, $\frac{L_e}{k} > \left(\frac{L_e}{k}\right)_l$

Therefore, the required equation of working stress σ_w according to AISC specific

$$\sigma_w = \frac{12\pi^2 E}{23\left(\frac{L_e}{k}\right)^2} = \frac{12\pi^2 \times 200\times 10^3}{23\times 138.60^2} MPa$$

$$= 53.61MPa$$

Load in member AC, $P_{AC} = \sigma_w \times A$

$$= 53.61\times 50^2 \times 10^{-3}\,kN = 134.03kN$$

Therefore, the required largest load, $P = P_{AC} = 134.03kN$ **Answer**

Problem P7.16:

A truss is constructed from the square steel members each having the same cross-se as shown in Figure P7.16. Using AISC specifications, determine the dimension of section if the truss supports a load $P = 600kN$. Consider only the buckling effect i plane of truss. Use modulus of elasticity $E = 200GPa$ and yield strength $S_y = 360M$

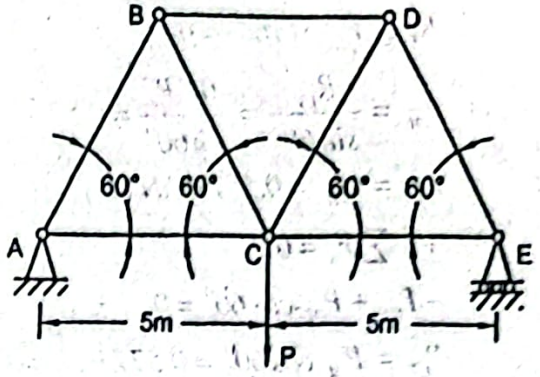

Figure P7.16

Given Data:

Load, $P = 600kN$

Yield strength, $S_y = 360MPa$

Modulus of elasticity, $E = 200GPa$

To Find:

- Dimension of cross-section, b

Solution:

Free body diagram of the entire truss is shown below.

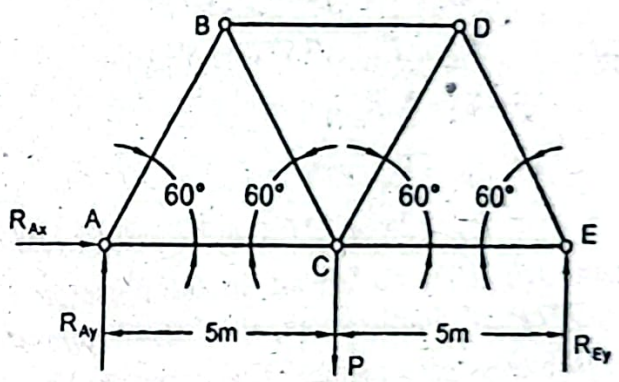

In static equilibrium condition,

$$+\rightarrow \sum F_x = 0: \quad R_{Ax} = 0$$

$$+\uparrow \sum F_y = 0:$$

or, $R_{Ay} + R_{Ey} - P = 0$

or, $R_{Ay} + R_{Ey} = P$

For symmetric loading, $R_{Ay} = R_{Ey} = 0.5P\ kN$

Considering the joint E as shown in the figure below,

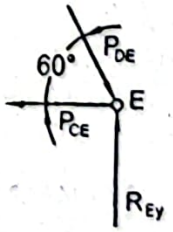

$$+\uparrow \sum F_y = 0:$$

or, $R_{EY} - P_{DE} \sin 60^0 = 0$

or, $P_{DE} = \frac{R_{EY}}{\sin 60^0} = \frac{0.5P}{\sin 60^0} = 0.577P \ kN(C)$

For symmetric loading, $P_{AB} = P_{DE} = 0.577P \ kN(C)$

$+\uparrow \sum F_y = 0:$

or, $-P_{CE} + P_{DE} \cos 60^0 = 0$

or, $P_{CE} = P_{DE} \cos 60^0 = 0.577P \cos 60^0 = 0.289P$ k

For symmetric loading, $P_{AC} = P_{CE} = 0.289P \ kN(T)$

Now considering the joint D as follows,

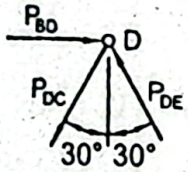

$+\uparrow \sum F_y = 0:$

or, $P_{DE} \cos 30^0 - P_{DC} \cos 30^0 = 0$

or, $P_{DC} = P_{DE} = 0.577P \ kN(T)$

For symmetric loading, $P_{BC} = P_{DC} = 0.577P \ kN(T)$

$+\rightarrow \sum F_x = 0:$

or, $P_{BD} - P_{DE} \sin 30^0 - P_{DC} \sin 30^0 = 0$

or, $P_{BD} = 2 \times 0.577P \times \sin 30^0 = 0.577P \ kN(C)$

Therefore, the members AB, BD and DE are in compression and each has compressive load of $0.577P \ kN$. Furthermore, all of them have equal length and to equivalent triangle. In a truss each member is assumed to be pin ended, the effective length, $L_e = L = 5m$

According to AISC specifications, working stress,

$$\sigma_w = \frac{12\pi^2 E}{23\left(\frac{L_e}{k}\right)^2}$$

or, $$\frac{P}{A} = \frac{12\pi^2 E}{23\left(\frac{L_e}{k}\right)^2}$$

or, $$P = \frac{12\pi^2 IE}{23(L_e)^2}$$

or, $$I = \frac{23PL_e^2}{12\pi^2 E} = \frac{23 \times 600 \times 10^3 \times 5^2}{12\pi^2 \times 200 \times 10^9}$$

or, $I = 14.57 \times 10^{-6} \ m^4 = 14.57 \times 10^6 \ mm^4$

$$\text{or, } \frac{b^4}{12} = 14.57\times10^6$$

$$\text{or, } b = 115mm$$

Here b is the side dimension of cross-section of the member.

Radius of gyration, $k = \frac{b}{\sqrt{12}} = \frac{115}{\sqrt{12}}mm = 33.2mm$

Slenderness ratio, $\frac{L_e}{k} = \frac{5\times10^3}{33.2} = 150.60$

We have for the limiting slenderness ratio,

$$\left(\frac{L_e}{k}\right)_l = \sqrt{\frac{2\pi^2E}{S_y}} = \sqrt{\frac{2\pi^2\times200\times10^3}{360}} = 104.72$$

That is, $\frac{L_e}{k} > \left(\frac{L_e}{k}\right)_l$ as a result equation of σ_w considered is valid.

Therefore, the required dimension, $b = 115mm$ ***Answer***

Problem P7.17:

A column made of *W 310×158 Section* with one end fixed and one end hinged carries a central load of *1500kN*. Using AISC column specifications, determine the maximum length of the column if the yield strength $S_y = 360MPa$ and modulus of elasticity $E = 200GPa$.

Given Data:

Section of column = *W 310×158*

Central load, $P = 1500kN$

Yield strength, $S_y = 360MPa$

Modulus of elasticity, $E = 200GPa$

To Find:

- Maximum length, L

Solution:

Properties of *W310×158 Section* are:

Cross-sectional area, $A = 20100mm^2$

Least moment of inertia, $I = 125\times10^6\ mm^4$

Least radius of gyration, $k = 78.9mm$

Limiting stress ratio, $\left(\frac{L_e}{k}\right)_l = \sqrt{\frac{2\pi^2E}{S_y}} = \sqrt{\frac{2\pi^2\times200\times10^3}{360}} = 104.72$

We have from AISC column specifications, working stress,

$$\sigma_w = \frac{12\pi^2E}{23\left(\frac{L_e}{k}\right)^2}$$

$$A \quad 23\left(\frac{L_e}{k}\right)$$

Substituting the values, $$\frac{1500\times10^3}{20100}=\frac{12\pi^2\times200\times10^3}{23\left(\frac{L_e}{k}\right)^2}$$

$$\text{or, } \frac{L_e}{k}=117.47$$

That is, slenderness ratio, $$\frac{L_e}{k}>\left(\frac{L_e}{k}\right)_l$$

Therefore, the equation considered is valid.

Effective length of the column, $L_e = 117.47\times k$

$$= 117.47\times78.9\times10^{-3}$$
$$= 9.27m$$

Therefore, the required length of the column for one end fixed and one end free,

$$L=\frac{L_e}{0.7}=\frac{9.27}{0.7}m = 13.24m \textbf{ Answer}$$

Problem P7.18:

A column is made of *W 310×118 Section*. Using AISC column specifications, f
safe axial load that can be carried for both ends hinged and length of (a) *10m* and (
Consider yield strength $S_y = 350MPa$ and modulus of elasticity $E = 200GPa$.

Given Data:

Section of column = *W 310×118*

Length of column, $L = 10m$ and $6m$

Yield strength, $S_y = 350MPa$

Modulus of elasticity, $E = 200GPa$

To Find:

- Safe load, P for length $10m$ and $6m$

Solution:

Properties of *S130×118 Section* from Table (Appendix A8) are:

Cross-sectional area, $A = 15000mm^2$

Least radius of gyration, $k = 77.5mm$

We have the limiting slenderness ratio,

$$\left(\frac{L_e}{k}\right)_l=\sqrt{\frac{2\pi^2E}{S_y}}=\sqrt{\frac{2\pi^2\times200\times10^3}{350}}=106.21$$

(a) For the hinged ends, the effective length, $L_e = L = 10m$

Therefore, the slenderness ratio, $\frac{L_e}{k}=\frac{10\times10^3}{77.5}=129.03$

Since, $\frac{L_e}{k} > \left(\frac{L_e}{k}\right)_1$ working stress according to AISC column specifications,

$$\sigma_w = \frac{12\pi^2 E}{23\left(\frac{L_e}{k}\right)^2} = \frac{12\pi^2 \times 200\times 10^3}{23(129.03)^2} MPa = 61.86MPa$$

Therefore, the required safe axial load,

$$P = \sigma_w A$$
$$= 61.86\times 15000\times 10^{-3} kN = 927.9kN \quad \textit{Answer}$$

(b) For length, $L = 6m$

Effective length, $L_e = L = 6m$

Therefore, the slenderness ratio, $\frac{L_e}{k} = \frac{6\times 10^3}{77.5} = 77.42$

Since, $\frac{L_e}{k} < \left(\frac{L_e}{k}\right)_1$, the equation of the working stress according to AISC column specifications,

$$\sigma_w = \left[1 - \frac{\left(\frac{L_e}{k}\right)^2}{2\left(\frac{L_e}{k}\right)_1^2}\right]\frac{S_y}{n} \qquad (i)$$

Safety factor, $$n = \frac{5}{3} + \frac{3\left(\frac{L_e}{k}\right)}{8\left(\frac{L_e}{k}\right)_1} - \frac{\left(\frac{L_e}{k}\right)^3}{8\left(\frac{L_e}{k}\right)_1^3}$$

or, $$n = \frac{5}{3} + \frac{3(77.42)}{8(106.21)} - \frac{(72.43)^3}{8(106.21)^3} = 1.89$$

Now from Equation (i), $$\sigma_w = \left[1 - \frac{(77.42)^2}{2(106.21)^2}\right]\frac{350}{1.89} = 135.99MPa$$

Therefore, the required safe axial load,

$$P = \sigma_w A = 135.99\times 15000\times 10^{-3} kN$$
$$= 2039.85kN \quad \textit{Answer}$$

Problem P7.19:

A $6m$ long column is fabricated from $20mm$ thick steel plate to make the square box section of side dimension $100mm$. If the column is fixed at both the ends, determine the safe central load that can be carried by the column, using AISC column specifications. Consider yield strength $S_y = 380MPa$ and modulus of elasticity $E = 200GPa$.

Given Data:

Length of column, $L = 6m$

Plate thickness, $t = 2$...

Side dimension of column, $b = 10$...

Yield strength, $S_y = 380MPa$

Modulus of elasticity, $E = 200GPa$

To Find:

- Safe central load, P using AISC column specifications

Solution:

Square box section of the column is given in the figure below.

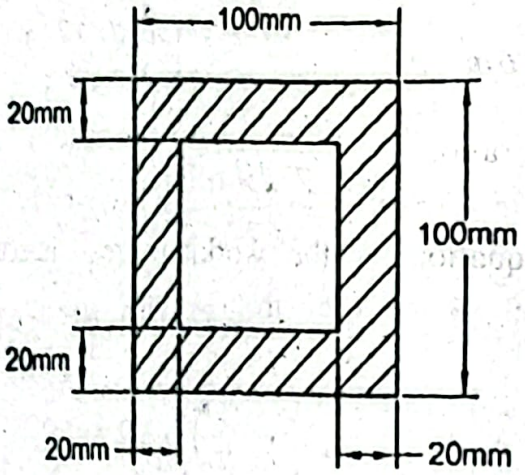

Moment of inertia, $$I = \frac{1}{12}\left[b^4 - (b-2t)^4\right]$$

$$= \frac{1}{12}\left[100^4 - (100-40)^4\right] mm^4 = 7.25\times10^6 m$$

Cross-sectional area, $$A = b^2 - (b-2t)^2$$

$$= \left[100^2 - (100-40)^2\right] mm^2 = 6400mm^2$$

Radius of gyration, $$k = \sqrt{\frac{I}{A}} = \sqrt{\frac{7.25\times10^6}{6400}} mm = 33.66mm$$

Limiting slenderness ratio, $$\left(\frac{L_e}{k}\right)_l = \sqrt{\frac{2\pi^2 E}{S_y}} = \sqrt{\frac{2\pi^2\times200\times10^3}{380}} = 101.93$$

Effective length, $L_e = 0.5L$ for fixed ends

or, $L_e = 0.5\times6m = 3m$

Slenderness ratio, $$\frac{L_e}{k} = \frac{3\times10^3}{33.66} = 89.13$$

That is, $$\frac{L_e}{k} < \left(\frac{L_e}{k}\right)_l$$

For this slenderness ratio the equation of working stress according to AISC specifications,

$$\sigma_w = \left[1 - \frac{\left(\frac{L_e}{k}\right)^2}{2\left(\frac{L_e}{k}\right)_1^2}\right]\frac{S_y}{n} \qquad (i)$$

But safety factor, $$n = \frac{5}{3} + \frac{3\left(\frac{L_e}{k}\right)}{8\left(\frac{L_e}{k}\right)_1} - \frac{\left(\frac{L_e}{k}\right)^3}{8\left(\frac{L_e}{k}\right)_1^3}$$

$$\text{or, } n = \frac{5}{3} + \frac{3(89.13)}{8(101.93)} - \frac{(89.13)^3}{8(101.93)^3} = 1.91$$

Therefore, from Equation(i), $\sigma_w = \left[1 - \frac{(89.13)^2}{2(101.93)^2}\right]\frac{380}{1.91} = 122.89MPa$

Therefore, the required safe central load,

$$P = \sigma_w \times A = 122.89 \times 6400 \times 10^{-3}$$
$$= 786.5kN \quad \textit{Answer}$$

Problem P7.20:

Select the lightest W shape for a fixed ends column of length $6m$ that carries an axial load of $145kN$. Use AISC column specifications. Yield strength $S_y = 360MPa$ and modulus of elasticity $E = 200GPa$.

Given Data:

Length of column, $L = 6m$

Axial load, $P = 145kN$

Yield strength, $S_y = 360MPa$

Modulus of elasticity, $E = 200GPa$

To Find:

- Lightest W shape.

Solution:

Limiting slenderness ratio, $\left(\frac{L_e}{k}\right)_1 = \sqrt{\frac{2\pi^2 E}{S_y}} = \sqrt{\frac{2\pi^2 \times 200 \times 10^3}{360}} = 104.72$

For fixed ends, the effective length,

$$L_e = \frac{L}{2} = \frac{6}{2}m = 3m$$

At the beginning let us consider the slenderness ratio, $\frac{L_e}{k} = 0$

For $L_e / k = 0$, safety factor $= 5/3$ and $\sigma_w = \frac{S_y}{n} = \frac{360 \times 3}{5}MPa = 216MPa$ according to AISC column specifications

Now let us consider 80% of this stress as the initial stress σ_i.

That is, $\sigma_i = 0.8 \times \sigma_w = 0.8 \times 216MPa = 172.8MPa$

To find the cross-sectional area of the column,

$$A = \frac{P}{\sigma_i} = \frac{145 \times 10^3}{172.8} mm^2 = 839.12mm^2$$

Now corresponding to this area from Table (Appendix A7) W shape section is ch $W150 \times 14$, having cross-sectional area $A = 1730mm^2$ and $k = 23.0mm$.

Slenderness ratio, $\frac{L_e}{k} = \frac{3 \times 10^3}{23} = 130.43 > 104.72$

According to AISC column specifications,

$$\sigma_w = \frac{12\pi^2 E}{23(L_e / k)^2} = \frac{12 \times \pi^2 \times 200 \times 10^3}{23 \times 130.43^2} MPa = 60.54$$

Therefore, the allowable axial load,

$$P = \sigma_w A = 60.54 \times 1730 \times 10^{-3} kN = 104.73kN$$

This value is lower than the actual axial load of $145kN$.

Therefore, W shape with the higher area has to be selected. Let us select from (Appendix A7) W150×18 having $A = 2290mm^2$ and $k = 23.5mm$.

Slenderness ratio, $\frac{L_e}{k} = \frac{3 \times 10^3}{23.5} = 127.66 > 104.72$

Working stress, $\sigma_w = \frac{12\pi^2 E}{23\left(\frac{L_e}{k}\right)^2} = \frac{12 \times \pi^2 \times 200 \times 10^3}{23 \times 127.66^2} MPa = 63.18MPa$

Therefore, the allowable axial load,

$$P = \sigma_w \times A = 63.19 \times 2290 \times 10^{-3} kN = 144.71kN \approx 145kN$$

Hence, the required lightest W shape is $W150 \times 18$ *Answer*

Problem P7.21:

Select the lightest W shape for a pin ended column of length $4m$ that will carry a cer load of $450kN$. Use AISC column specifications. Yield strength $S_y = 360MPa$ modulus of elasticity $E = 200GPa$.

Given Data:

Length of column, $L = 4m$

Central load, $P = 450kN$

Yield strength, $S_y = 360MPa$

Modulus of elasticity, $E = 200GPa$

To Find:

- Lightest W shape.

Solution:

Limiting slenderness ratio, $\left(\frac{L_e}{k}\right)_l = \sqrt{\frac{2\pi^2 E}{S_y}} = \sqrt{\frac{2\pi^2 \times 200 \times 10^3}{360}} = 104.72$

For the pin ended column, the effective length, $L_e = L = 4m$

At the beginning let us consider the slenderness ratio, $\frac{L_e}{k} = 0$

For $L_e / k = 0$, safety factor $n = 5/3$ and $\sigma_w = \frac{S_y}{n} = \frac{360 \times 3}{5} MPa = 216MPa$ according to AISC column specifications.

Now let us consider 80% of this stress as the initial stress σ_i.

That is, $\sigma_i = 0.8 \times \sigma_w = 0.8 \times 216MPa = 172.8MPa$

To find the cross-sectional area of the column,

$$A = \frac{P}{\sigma_i} = \frac{450 \times 10^3}{172.8} mm^2 = 2604.17mm^2$$

Now corresponding to this area from Table (Appendix A7) W shape section is chosen as $W150 \times 22$, having cross-sectional area $A = 2850mm^2$ and $k = 36.8mm$.

Slenderness ratio, $\frac{L_e}{k} = \frac{4000}{36.8} = 108.69$

Since, $\frac{L_e}{k} > \left(\frac{L_e}{k}\right)_l$

According to AISC column specifications,

$$\sigma_w = \frac{12\pi^2 E}{23\left(\frac{L_e}{k}\right)^2} = \frac{12 \times \pi^2 \times 200 \times 10^3}{23 \times 108.69^2} MPa = 87.18MPa$$

Therefore, the allowable axial load,

$$P = \sigma_w A = 87.18 \times 2850kN = 248.46kN$$

This value is lower than $450kN$ as needed.

Now let us choose $W150 \times 37$ from Table (Appendix A7) shape having higher area $= 4730mm^2$ and $k = 38.7mm$..

Slenderness ratio, $\frac{L_e}{k} = \frac{4000}{38.7} = 103.36$

But this value is less than the limiting slenderness value of 104.72.

According to AISC column specifications, safety factor,

$$n = \frac{5}{3} + \frac{3\left(\frac{L_e}{k}\right)}{8\left(\frac{L_e}{k}\right)_l} - \frac{\left(\frac{L_e}{k}\right)^3}{8\left(\frac{L_e}{k}\right)_l^3}$$

$$\text{or, } n = \frac{5}{3} + \frac{3(103.36)}{8(104.72)} - \frac{(103.36)^3}{8(104.72)^3} = 1.92$$

and working stress, $$\sigma_w = \left[1 - \frac{\left(\frac{L_e}{k}\right)^2}{2\left(\frac{L_e}{k}\right)_1^2}\right]\frac{S_y}{n}$$

$$= \left[1 - \frac{103.36^2}{2 \times 104.72^2}\right]\frac{360}{1.92}$$

$$= 96.17MPa$$

Therefore, the allowable central load,

$$P = \sigma_w A$$

$$= 96.17 \times 4730 \times 10^{-3} kN$$

$$= 454.88kN$$

This value is slightly higher than the actual load $450kN$.
Therefore, the required lightest section is $W150 \times 22$ *Answer*
It can be noted here that after $W150 \times 22$, some middle sections have bee
because there was large difference between the load needed to be applied an
load for $W150 \times 22$ shape.

Problem P7.22:
A pin ended solid circular shaft of $100mm$ diameter is to carry a central load. D
the maximum length of the column for which Johnson's formula is applicabl
strength S_y and modulus of elasticity E are respectively $350MPa$ and $200GP$
length of the column is $2m$, find the safe central load that can be carried with
factor of 2.0.

Given Data:
Diameter of shaft, $d = 100mm$
Length of column, $L = 2m$
Factor of safety, $n = 2.0$
Yield strength, $S_y = 350MPa$
Modulus of elasticity, $E = 200GPa$

To Find:
- Maximum length of column for which Johnson's formula is applicable
- Safe central load, P

Solution:
We have slenderness ratio between the intermediate and the long column,

$$\left(\frac{L_e}{k}\right)_1 = \sqrt{\frac{2\pi^2 E}{S_y}} = \sqrt{\frac{2\pi^2 \times 200 \times 10^3}{350}} = 106.21$$

Radius of gyration, $$k = \frac{d}{4} = \frac{100}{4} mm = 25mm$$

Therefore, the maximum effective length for which Johnson formula is applicable,

$$L_e = 106.21 \times k = 106.21 \times 25 \times 10^{-3} m = 2.66m$$

That is, for the pin ended column the maximum length for which Johnson's formula is applicable,

$$L = L_e = 2.66m \quad \textit{Answer}$$

We have Johnson's formula for the critical load,

$$P_{cr} = A\left[S_y - \left(\frac{S_y}{2\pi}\right)^2 \frac{1}{E}\left(\frac{L_e}{k}\right)^2\right] \qquad (i)$$

Cross-sectional area, $A = \frac{\pi d^2}{4} = \frac{\pi \times 100^2}{4} mm^2 = 7854mm^2$

Effective length of column, $L_e = L = 2m$, which is less than the maximum limit of $2.66m$, therefore, Johnson's formula is applicable.

Critical load, $P_{cr} = nP = 2P$

Substituting the values in Equation (i),

$$2P = 7854\left[350 - \left(\frac{350}{2\pi}\right)^2 \frac{1}{200 \times 10^3}\left(\frac{2000}{25}\right)^2\right] \times 10^{-3}$$

or, $P = 985kN$ *Answer*

Problem P7.23:

A column is constructed from two unequal angle sections $200 \times 100 \times 20$ by welding them together to make a box section as shown in Figure P7.23. If the column is fixed at both the ends, determine the safe central load that can be applied with a factor of safety of 2.0 for a length of (a) $10m$ and (b) $6m$. Consider modulus of elasticity $E = 200GPa$ and yield strength $S_y = 380MPa$.

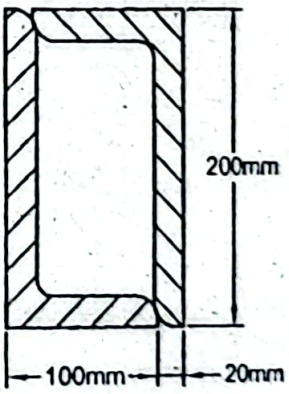

Figure P7.23

Given Data:

Section of Column = $200 \times 100 \times 20$ angle

Length of column, $L = 10m$ and $6m$

Factor of safety, $n = 2.0$

Yield strength, $S_y = 380MPa$

Modulus of elasticity, $E = 200GPa$

To Find:

- Safe central load, P

Solution:

Properties of angle $200\times100\times20$ from Table (Appendix A11) are:

$A = 5600mm^2$

$I_x = 22.6\times10^6\ mm^4$

$k_x = 63.6mm$

$y = 74.3mm$

$I_y = 3.84\times10^6\ mm^4$

$k_y = 26.2mm$

$x = 24.3mm$

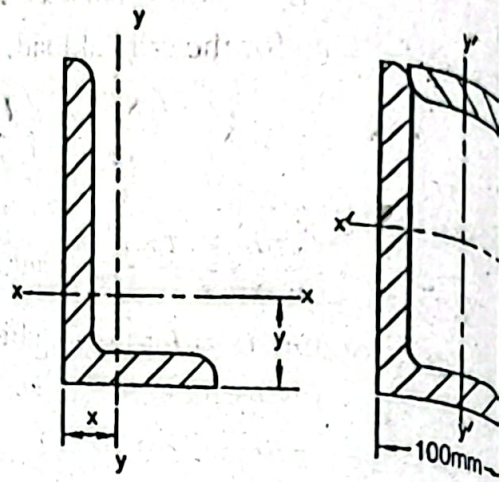

Moments of inertia about x' and y' axes,

$$I_{x'} = 2\left[22.6\times10^6 + 5600(100-74.3)^2\right]mm^4 = 52.6$$

$$I_{y'} = 2\left[3.84\times10^6 + 5600(60-24.3)^2\right]mm^4 = 21.95$$

Therefore, the least value, $I = I_{y'} = 21.95\times10^6\ mm^4$

Least value of radius of gyration,

$$k^2 = \bar{k}_y^2 + d^2$$

$$\text{or, } k = \sqrt{26.2^2 + (60-24.3)^2}\ mm = 44.28mm$$

Limiting slenderness ratio,

$$\left(\frac{L_e}{k}\right)_l = \sqrt{\frac{2\pi^2 E}{S_y}} = \sqrt{\frac{2\pi^2\times200\times10^3}{380}} = 101.93$$

(a) For column length of $10m$;

Effective length, $L_e = \frac{L}{2} = \frac{10}{2}m = 5m$ for both ends fixed

Therefore, the slenderness ratio,

$$\frac{L_e}{k} = \frac{5\times10^3}{44.28} = 112.92$$

Here, $\frac{L_e}{k} > \left(\frac{L_e}{k}\right)_l$, therefore, Euler's formula has to be applied.

Critical load, $P_{cr} = nP = 2P$

We have Euler's formula for the critical load,

$$P_{cr} = \frac{EI\pi^2}{L_e^2}$$

$$\text{or, } 2P = \frac{200\times10^{3}\times21.95\times10^{6}\times\pi^{2}}{(5\times10^{3})^{2}}\times10^{-3}$$

$$\text{or, } P = 866.55kN \text{ Answer}$$

) For the column length of $6m$,

ffective length, $L_e = L/2 = 6/2m = 3m$ for both ends fixed

lenderness ratio, $\frac{L_e}{k} = \frac{3\times10^{3}}{44.28} = 67.75$

lere, $\frac{L_e}{k} < \left(\frac{L_e}{k}\right)_t$, therefore, Johnson's formula has to be used

ohnson's formula for the critical load,

$$P_{cr} = A\left[S_y - \left(\frac{S_y}{2\pi}\right)^2 \frac{1}{E}\left(\frac{L_e}{k}\right)^2\right]$$

$$\text{or, } 2P = (2\times5600)\left[380 - \left(\frac{380}{2\pi}\right)^2 \frac{1}{200\times10^{3}}(67.75)^2\right]\times10^{3}$$

$$\text{or, } P = 1657.91kN \text{ Answer}$$

oblem P7.24:

column with hinged ends is constructed by welding two unequal angle sections $00\times100\times20$ as shown in Figure P7.24. Determine the safe axial load that can be pported with a safety factor of 2.5 for column length of (a) $4m$ and (b) $3m$. Consider odulus of elasticity $E = 200GPa$ and yield strength $S_y = 380MPa$.

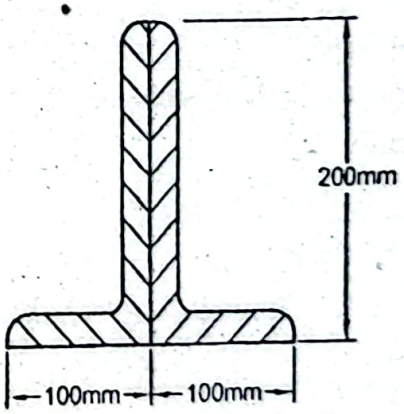

Figure P7.24

ven Data:

ction of column = $200\times100\times20$ angle

ngth of column, $L = 4m$ and $3m$

ctor of safety, $n = 2.5$

eld strength, $S_y = 380MPa$

odulus of elasticity, $E = 200GPa$

Find:

afe axial load, P

Properties of angle 200×10... ...ppendix A11) are:

$A = 5600mm^2$

$I_x = 22.6\times10^6\ mm^4$

$k_x = 63.6mm$

$y = 74.3mm$

$I_y = 3.84\times10^6\ mm^4$

$k_y = 26.2mm$

$x = 24.3mm$

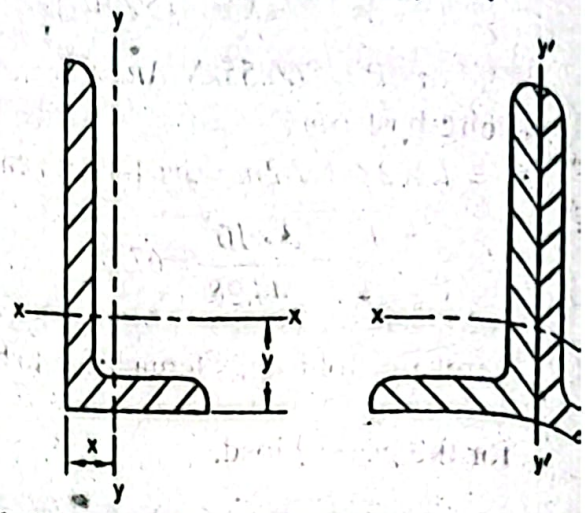

When two angle sections are welded together, moments of inertia,

$$I_x = 2\times22.6\times10^6\ mm^4 = 45.2\times10^6\ mm^4$$

$$I_{y'} = 2\left[3.84\times10^6 + 5600\times24.3^2\right] = 14.29\times10^6$$

Therefore, the least value, $I = I_{y'} = 14.29\times10^6\ mm^4$

Least value of radius of gyration,

$$k^2 = \bar{k}_y^2 + d^2$$

$$\text{or, } k = \sqrt{26.2^2 + (24.3)^2}\ mm = 35.73mm$$

Limiting slenderness ratio,

$$\left(\frac{L_e}{k}\right)_l = \sqrt{\frac{2\pi^2E}{S_y}} = \sqrt{\frac{2\pi^2\times200\times10^3}{380}} = 101.93$$

(a) For the column length of $4m$,

Effective length, $L_e = L = 4m$ for both ends hinged.

Therefore, the slenderness ratio,

$$\frac{L_e}{k} = \frac{4\times10^3}{35.73} = 111.95$$

Here, $\frac{L_e}{k} > \left(\frac{L_e}{k}\right)_l$, therefore, Euler's formula is applicable.

Critical load, $P_{cr} = nP = 2.5P$

We have Euler's formula for the critical load,

$$P_{cr} = \frac{EI\pi^2}{L_e^2}$$

$$\text{or, } 2.5P = \frac{200\times10^3\times14.29\times10^6\times\pi^2}{\left(4\times10^3\right)^2}\times10^{-3}$$

$$\text{or, } P = 705.18kN \quad \textit{Answer}$$

(b) For the column length of $3m$,

Effective length, $L_e = L = 3m$ for both ends hinged.

herefore, the slenderness ratio,

$$\frac{L_e}{k} = \frac{3\times10^3}{35.73} = 83.96$$

ere, $\frac{L_e}{k} < \left(\frac{L_e}{k}\right)_1$, therefore, Johnson's formula will be applicable

ohnson's formula for the critical load,

$$P_{cr} = A\left[S_y - \left(\frac{S_y}{2\pi}\right)^2 \frac{1}{E}\left(\frac{L_e}{k}\right)^2\right]$$

$$\text{or, } 2.5P = (2\times5600)\left[380 - \left(\frac{380}{2\pi}\right)^2 \frac{1}{200\times10^3}(83.96)^2\right]\times10^{-3}$$

$$\text{or, } P = 1124.84kN \textit{ Answer}$$

roblem P7.25:

wo equal angle sections $150\times150\times20$ are welded together to make a column with both ds hinged as shown in Figure P7.25. Determine the safe axial load that can be carried the column for a length of (a) $5m$ and (b) $3m$. Consider modulus of elasticity $= 200GPa$ and yield strength $S_y = 360MPa$. Use AISC column specifications.

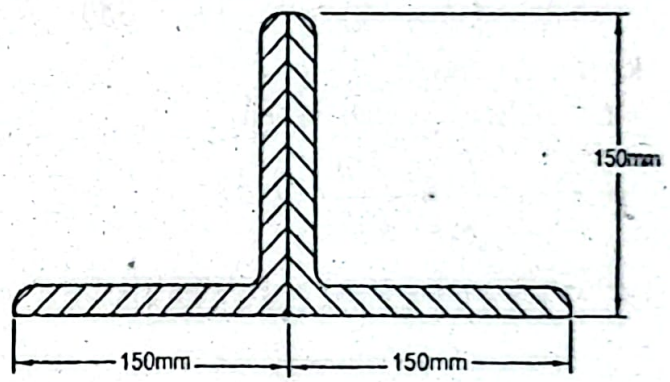

Figure P7.25

ven Data:

ction of column = $150\times150\times20$ angle

ngth of column, $L = 5m$ and $3m$

eld strength, $S_y = 360MPa$

odulus of elasticity, $E = 200GPa$

Find:

afe axial load, P

lution:

operties of $150\times150\times20$ angle section from Table (Appendix A10) are:

$A = 5600mm^2$

$I_x = I_y = 11.6\times10^6\ mm^4$

$k_x = k_y = 45.5mm$

$x = y = 44.8mm$

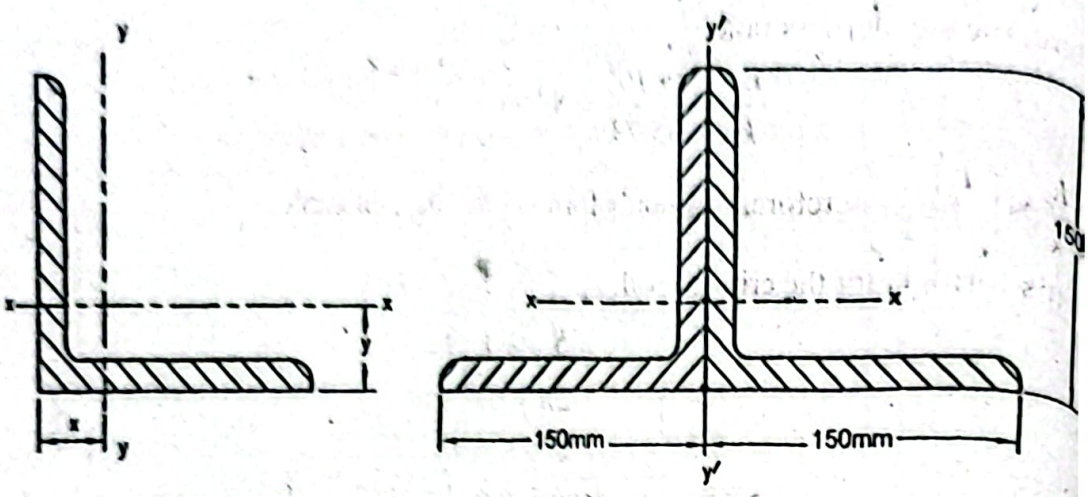

When two angle sections are welded together, moments of inertia become,

$$I_x = 2\left[11.6\times10^6\right]mm^4 = 23.2\times10^6\,mm^4$$

$$I_y = 2\left[11.6\times10^6 + 5600\times44.8^2\right]mm^4 = 45.68\times10^6$$

Therefore, the least value of moment of inertia, $I = I_x = 23.2\times10^6\,mm^4$

Least value of radius of gyration, $k = 45.5mm$

Limiting slenderness ratio, $\left(\frac{L_e}{k}\right)_l = \sqrt{\frac{2\pi^2E}{S_y}} = \sqrt{\frac{2\pi^2\times200\times10^3}{360}} = 104.72$

(a) For the column length, $L = 5m$,

Effective length, $L_e = L = 5m$ for both ends hinged

Therefore, the slenderness ratio, $\frac{L_e}{k} = \frac{5\times10^3}{45.5} = 109.89$

Here, $\frac{L_e}{k} > \left(\frac{L_e}{k}\right)_l$, therefore, according to AISC column specifications, the equation

working stress,

$$\sigma_w = \frac{12\pi^2E}{23\left(\frac{L_e}{k}\right)^2} = \frac{12\times\pi^2\times200\times10^3}{23\times109.89^2}MPa$$

$$= 85.28MPa$$

Therefore, the safe axial load, $P = \sigma_w A = 85.28\times\left(2\times5600\right)\times10^{-3}kN$

$$= 955.14kN \text{ Answer}$$

(b) For the column length, $L = 3m$,

Effective length, $L_e = L = 3m$ for both ends hinged

Therefore, the slenderness ratio, $\frac{L_e}{k} = \frac{3\times10^3}{45.5} = 65.93$

Here, $\frac{L_e}{k} < \left(\frac{L_e}{k}\right)_l$, therefore, according to AISC column specifications, the equation

working stress,

$$\sigma_w = \left[1 - \frac{\left(\frac{L_e}{k}\right)^2}{2\left(\frac{L_e}{k}\right)_1^2}\right]\frac{S_y}{n} \qquad (i)$$

fety factor, $$n = \frac{5}{3} + \frac{3\left(\frac{L_e}{k}\right)}{8\left(\frac{L_e}{k}\right)_1} - \frac{\left(\frac{L_e}{k}\right)^3}{8\left(\frac{L_e}{k}\right)_1^3}$$

$$\text{or, } n = \frac{5}{3} + \frac{3(65.93)}{8(104.72)} - \frac{(65.93)^3}{8(104.72)^3} = 1.87$$

ow from Equation (i), $$\sigma_w = \left[1 - \frac{65.93^2}{2\times 104.72^2}\right]\frac{360}{1.87}$$

$$= 154.36MPa$$

erefore, the safe axial load, $$P = \sigma_w A$$

$$= 154.36\times(2\times 5600)\times 10^{-3}$$

$$= 1728.83kN \text{ Answer}$$

oblem P7.26:

1m long hollow circular column hinged at both ends with outer diameter of *100mm* l wall thickness of *6mm* is subjected to an eccentric load of P with eccentricity of *mm*. Determine the eccentric load P with a factor of safety of *2.5* using Secant mula. Modulus of elasticity E and yield strength S_y are respectively *200GPa* *250MPa*.

en Data:

side diameter, $d_o = 100mm$

gth of column, $L = 1m$

ll thickness, $t = 6mm$

centricity, $e = 12mm$

tor of safety, $n = 2.5$

ld strength, $S_y = 250MPa$

dulus of elasticity, $E = 200GPa$

Find:

centric load, P

ution:

ss-section of the hollow circular column is shown in the following figure.

both ends hinged, the effective length, $L_e = L = 1m$

de diameter of the column, $d_i = d_o - 2t = (100 - 2\times 6)mm = 88mm$

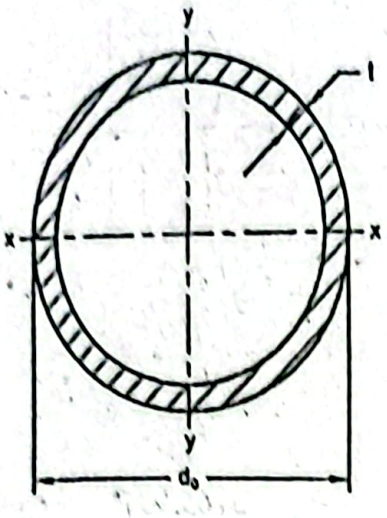

Moment of inertia, $I = \frac{\pi}{64}\left(d_o^4 - d_i^4\right)$

$$= \frac{\pi}{64}\left(100^4 - 88^4\right) mm^4 = 1.965 \times 10^6\ mm^4$$

Cross-sectional area, $A = \frac{\pi}{4}\left(d_o^2 - d_i^2\right)$

$$= \frac{\pi}{4}\left(100^2 - 88^2\right) mm^2 = 1772 mm^2$$

Radius of gyration, $k = \sqrt{\frac{I}{A}} = \sqrt{\frac{1.965 \times 10^6}{1772}} mm = 33.30mm$

We have Secant formula,

$$\frac{P_{cr}}{A} = \frac{S_y}{1 + \frac{ec}{k^2} sec\left(\frac{l}{2}\sqrt{\frac{P_{cr}}{AE}}\frac{L_e}{k}\right)}$$

$$\text{or, } \frac{2.5P}{1772} = \frac{250}{1 + \frac{12 \times 50}{33.30^2} sec\left(\frac{1}{2}\sqrt{\frac{2.5 \times P}{1772 \times 200 \times 10^3}} \times \frac{1 \times 10^3}{33.3}\right)}$$

$$\text{or, } P = 111.3kN \text{ Answer}$$

Problem P7.27:

A steel column of effective length of $1.5m$ has a section of $50mm \times 75mm$. Using Se formula, determine the safe eccentric load that can be carried by the column with a s factor of 2.0 and an eccentricity of $125mm$ from the weaker axis. Modulus of elast E and yield strength S_y are respectively $200GPa$ and $250MPa$.

Given Data:

Effective length, $L_e = 1.5m$

Column section, $= 50mm \times 75mm$

Eccentricity, $e = 125mm$

Factor of safety, $n = 2.0$

Yield strength, $S_y = 250MPa$

Modulus o

To Find:

Safe eccentric load, P

Solution:

Cross-section of the column is shown in the figure below.

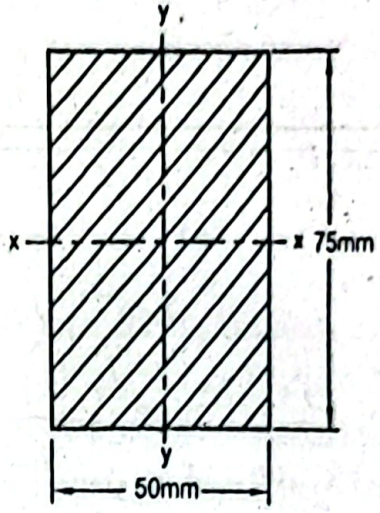

Critical load, $P_{cr} = nP = 2.0P$

Here, y-y is the weaker axis (minor axis).

Least moment of inertia, $I = \frac{1}{12} \times 75 \times 50^3 \, mm^4 = 78.13 \times 10^4 \, mm^4$

Cross-sectional area, $A = 50 \times 75 mm^4 = 3750 mm^4$

Least radius of gyration, $k = \sqrt{\frac{I}{A}} = \sqrt{\frac{78.13 \times 10^4}{3750}} mm = 14.43 mm$

Distance of the outer fiber, $c = \frac{50}{2} mm = 25 mm$

We have Secant formula, $$\frac{P_{cr}}{A} = \frac{S_y}{1 + \frac{ec}{k^2} sec\left(\frac{1}{2}\sqrt{\frac{P_{cr}}{AE}} \frac{L_e}{k}\right)}$$

$$\text{or, } \frac{2.0P}{3750} = \frac{250}{1 + \frac{125 \times 25}{14.43^2} sec\left(\frac{1}{2}\sqrt{\frac{2.0 \times P}{3750 \times 200 \times 10^3}} \frac{1.5 \times 10^3}{14.43}\right)}$$

$$\text{or, } P = \frac{468750}{1 + 15.01 \, sec\left(2.684 \times 10^{-3} \sqrt{P}\right)}$$

$$\text{or, } P = 26.7 kN \quad \textbf{Answer}$$

Problem P7.28:

A square steel column of length $1.5m$ is subjected to an eccentric load of $100kN$ with an eccentricity of $25mm$. The column is fixed at one end and free at the other end. Using Secant formula, find the dimension of the column section if the allowable normal stress is $110MPa$ and modulus of elasticity is $200GPa$.

Given Data:

Length of column, $L = 1.5m$

Eccentricity, $e = 25mm$

Eccentric load, $P = 100kN$

Allowable normal stress, $\sigma_a = 110MPa$

Modulus of elasticity, $E = 200GPa$

To Find:

- Dimension of cross-section, b

Solution:

We have Secant formula,

$$\frac{P_{cr}}{A} = \frac{S_y}{1 + \frac{ec}{k^2} sec\left(\frac{1}{2}\sqrt{\frac{P_{cr}}{AE}}\frac{L_e}{k}\right)}$$

If b is the side dimension, then the radius of gyration,

$$k = \frac{b}{\sqrt{12}} mm$$

For one end fixed and one end free, the effective length of the column,

$$L_e = 2L = 2 \times 1.5m = 3000mm$$

Distance of the outer fiber of the column,

$$c = \frac{b}{2} mm$$

Maximum normal stress, $\sigma_{max} = \sigma_a = 110MPa$

Eccentric load, $P = 100 \times 10^3 N$

Cross-sectional area, $A = b^2$

Substituting in Equation (i),

$$\frac{100 \times 10^3}{b^2} = \frac{110}{1 + \frac{25 \times b \times 12}{2 \times b^2} sec\left(\frac{1}{2}\sqrt{\frac{100 \times 10^3}{b^2 \times 200 \times 10^3}}\ 3($$

$$\text{or, } \frac{1}{b^2} = \frac{1.1 \times 10^{-3}}{1 + \frac{150}{b} sec\left(\frac{3674.23}{b^2}\right)}$$

$$\text{or, } b = 64.8mm \text{ Answer}$$

Problem P7.29:

A $1m$ long aluminum column of $50mm \times 50mm$ square cross-section is fixed and free at the other end. It carries an eccentric load of P at its free en eccentricity of $6mm$. Determine the eccentric load P for a horizontal de $12mm$ at its free end. Also determine the maximum stress for this deflection modulus of elasticity $E = 70GPa$.

Given Data:

Length of column, $L = 1m$

Cross-section of column $= 50mm \times 50mm$

Eccentricity, $e = 6mm$

Horizontal deflection at free end, $y_{max} = 12mm$

Modulus of elasticity, $E = 70GPa$

To Find:

Eccentric load, P

Maximum stress, σ_{max}

Solution:

Cross-section of the column is shown in the figure below.

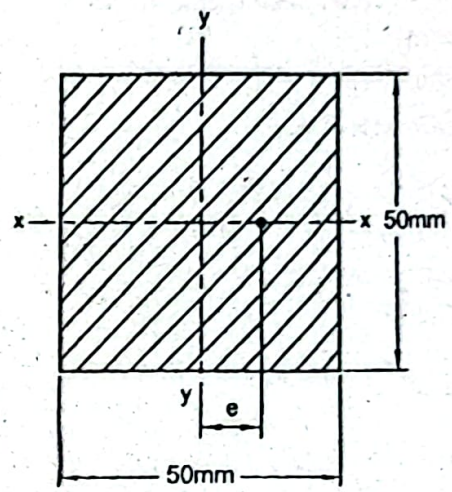

r one end fixed and one end free, the effective length of the column,

$$L_e = 2L = 2 \times 1.0m = 2m$$

oss-sectional area, $A = 50 \times 50mm^2 = 2500mm^2$

dius of gyration, $k = \frac{b}{\sqrt{12}} = \frac{50}{\sqrt{12}} mm = 14.43mm$

flection is maximum at the free end and this deflection is given by,

$$y_{max} = e\left[sec\left(\frac{1}{2}\sqrt{\frac{P}{AE}}\frac{L_e}{k} \right) - 1 \right]$$

$$\text{or, } 12 = 6\left[sec\left(\frac{1}{2}\sqrt{\frac{P}{2500 \times 70 \times 10^3}}\frac{2 \times 10^3}{14.43} \right) - 1 \right]$$

$$\text{or, } sec\left(\frac{1}{2}\sqrt{\frac{P}{2500 \times 70 \times 10^3}}\frac{2 \times 10^3}{14.43} \right) = 3$$

$$\text{or, } \frac{1}{2}\sqrt{\frac{P}{2500 \times 70 \times 10^3}}\frac{2 \times 10^3}{14.43} = cos^{-1}\left(\frac{1}{3}\right)$$

$$\text{or, } P = 55.22 \times 10^3 N$$

$$\text{or, } P = 55.22kN \textit{ Answer}$$

Maximum stress, $\sigma_{max} = \frac{P}{A}\left[1+\frac{ec}{k^2}\sec\left(\frac{l}{2}\sqrt{\frac{P}{AE}}\frac{L_e}{k}\right)\right]$

$$= \frac{55.22\times10^3}{2500}\left[1+\frac{6\times25}{14.43^2}\sec\left(\frac{l}{2}\sqrt{\frac{55.22\times10^3}{2500\times70\times10}}\right.\right.$$

$= 69.83MPa$ *Answer*

Problem P7.30:

A column fixed at one end and free at the other end having $80mm\times80mm$ s section is subjected to an eccentric load of $50kN$ at its free end with an ec $15mm$ and factor of safety of 2.0. Determine the maximum deflection an stress developed in the column.

Given Data:

Cross-section of column $= 80mm\times80mm$

Eccentricity, $e = 15mm$

Eccentric load, $P = 50kN$

Factor of safety, $= 2.0$

To Find:

- Maximum stress, σ_{max}
- Maximum deflection, y_{max}

Solution:

Cross-section of the column is shown in the figure below.

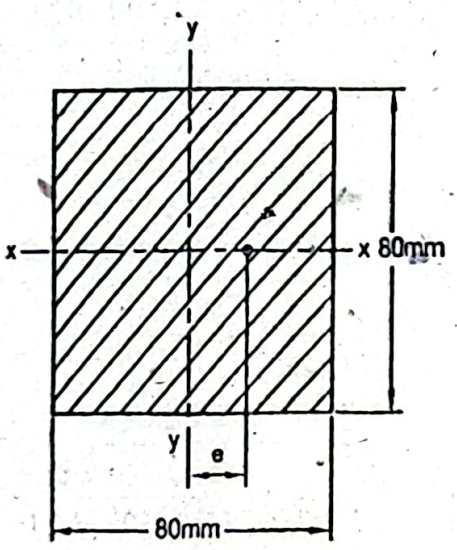

Cross-section, $A = 80\times80mm^2 = 6400mm^2$

Radius of gyration, $k = \frac{b}{\sqrt{12}} = \frac{80}{\sqrt{12}}mm = 23.09mm$

Critical load, $P_{cr} = nP = 2.0P$

Maximum deflection will occur at the free end of the column.

We have for maximum deflection,

$$y_{max} = e\left[\sec\left(\frac{\pi}{2}\sqrt{\frac{P}{P_{cr}}}\right) - 1\right]$$

$$= 15\left[\sec\left(\frac{\pi}{2}\sqrt{\frac{1}{2}}\right) - 1\right]$$

$$= 18.78mm \text{ Answer}$$

e have for maximum stress,

$$\sigma_{max} = \frac{P}{A}\left[1 + \frac{ec}{k^2}\sec\left(\frac{\pi}{2}\sqrt{\frac{P}{P_{cr}}}\right)\right]$$

$$= \frac{50\times10^3}{6400}\left[1 + \frac{15\times40}{23.09^2}\sec\left(\frac{\pi}{2}\sqrt{\frac{1}{2}}\right)\right]$$

$$= 27.61MPa \text{ Answer}$$

oblem P7.31:

3m long column fixed at one end and free at the other end is made of *W310×67* ction. When an eccentric load of *350kN* is applied on the major axis (*x*-axis), a flection of *4.5mm* is recorded at the free end of the column. Determine the eccentricity d maximum stress in the column. Consider modulus of elasticity $E = 200GPa$.

ven Data:

ction of column = *W310×67*

ngth of column, $L = 3m$

eflection at free end, $y_{max} = 4.5mm$

ccentric load, $P = 350kN$

odulus of elasticity, $E = 200GPa$

Find:

Eccentricity, *e*

Maximum stress, σ_{max}

lution:

roperties of *W310×67* section from Table (Appendix A7) are:

$A = 8510mm^2$

$h = 306mm$

$b = 204mm$

$I_y = 20.7\times10^6\ mm^4$

$Z_y = 203\times10^3\ mm^3$

$k_y = 49.3mm$

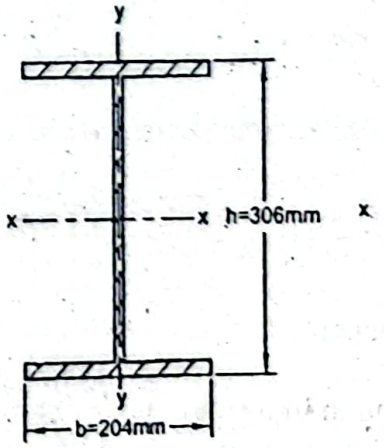

or one end free and one end fixed, the effective length of the column,

$$L_e = 2L = 2\times 3.0m = 6m$$

Deflection is maximum at the free end and this deflection is given by,

$$y_{max} = e\left[\sec\left(\frac{1}{2}\sqrt{\frac{P}{EI}}\frac{L_e}{2}\right)-1\right]$$

$$\text{or, } y_{max} = e\left[\sec\left(\frac{1}{2}\sqrt{\frac{P}{AE}}\frac{L_e}{k}\right)-1\right]$$

$$\text{or, } 4.5 = e\left[\sec\left(\frac{1}{2}\sqrt{\frac{350\times10^3}{8510\times200\times10^3}}\frac{6\times10^3}{49.3}\right)-1\right]$$

$$\text{or, } e = 8.10mm \text{ Answer}$$

We have for maximum stress,

$$\sigma_{max} = \frac{P}{A}\left[1+\frac{ec}{k^2}\sec\left(\frac{1}{2}\sqrt{\frac{P}{AE}}\frac{L_e}{k}\right)\right]$$

$$\text{or, } \sigma_{max} = \frac{350\times10^3}{8510}\left[1+\frac{8.10\times102}{49.3^2}\sec\left(\frac{1}{2}\sqrt{\frac{350\times10^3}{8510\times200\times10^3}}\right.\right.$$

$$\text{or, } \sigma_{max} = 62.88MPa \text{ Answer}$$

Problem P7.32:

A pin ended timber column having square cross-section with an effective len carries a central load of $150kN$. If modulus of elasticity $E = 10GPa$ and stress $\sigma_a = 8MPa$ for compression parallel to the grain, determine the side di the column using formula for timber as recommended by National Lumber Ass

Given Data:

Length of column, $L = 4m$

Central load, $P = 150kN$

Allowable stress, $\sigma_a = 8MPa$

Modulus of elasticity, $E = 10GPa$

To Find:

- Side dimension, d

Solution:

According to National Lumber Association, the working stress,

$$\sigma_w = \frac{P}{A} = \frac{0.3E}{\left(\frac{L_e}{d}\right)^2}$$

Effective length, $L_e = L = 4\times10^3 mm$ for the pin ended column

Substituting in Equation(i), $\frac{150\times10^3}{d^2} = \frac{0.3\times10\times10^3}{\left(\frac{4000}{d}\right)^2}$

or, $d = 168.2mm$

Therefore, the working stress,

$$\sigma_w = \frac{P}{A} = \frac{150\times10^3}{(168.2)^2} MPa = 5.30MPa$$

That is, the working stress, $\sigma_w < \sigma_a = 8MPa$

Therefore, the required value of side dimension,

$d = 168.2mm$ **Answer**

Problem P7.33:

A $3.5m$ long pin ended column of hollow square section as shown in Figure P7.33 supports an eccentric load with an eccentricity of $40mm$. Determine the largest load that can be applied using maximum stress approach and AISC column specifications. Yield strength $S_y = 250MPa$ and modulus of elasticity $E = 200GPa$.

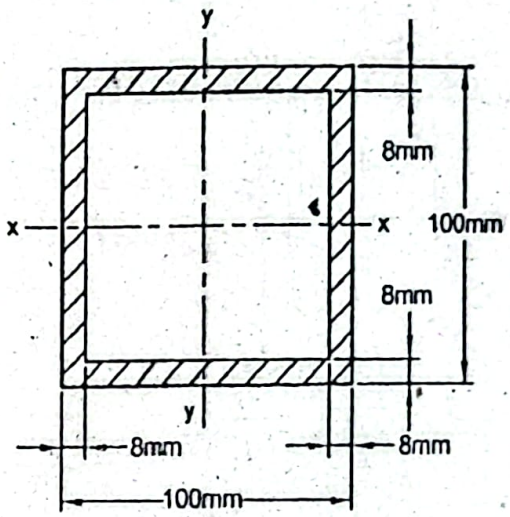

Figure P7.33

Given Data:

Length of column, $L = 3.5m$

Eccentricity, $e = 40mm$

Yield strength, $S_y = 250MPa$

Modulus of elasticity, $E = 200GPa$

To Find:

Largest load, P

Solution:

Limiting slenderness ratio,

$$\left(\frac{L_e}{k}\right)_l = \sqrt{\frac{2\pi^2 E}{S_y}} = \sqrt{\frac{2\pi^2\times200\times10^3}{250}} = 125.66$$

Moment of inertia, $I = \frac{1}{12}\left[b^4 - (b-2t)^4\right]$

$$= \frac{1}{12}\left[100^4 - (100-2\times8)^4\right] mm^4 = 4.18\times10^6\, mm^4$$

Cross-sectional area $A = b^2 - (b - 2t)^2$

$= 100^2 - (100 - 2\times 8)^2\ mm^2 = 2944 mm^2$

Radius of gyration, $k = \sqrt{\frac{I}{A}} = \sqrt{\frac{4.18\times 10^6}{2944}} mm = 37.68 mm$

Section modulus, $Z = \frac{I}{c} = \frac{4.18\times 10^6}{100/2} = 83.6\times 10^3 mm^3$

For the pin ended column, the effective length,

$L_e = L = 3.5m$

Slenderness ratio, $\frac{L_e}{k} = \frac{3.5\times 10^3}{37.68} = 92.89$

Here, $\frac{L_e}{k} < \left(\frac{L_e}{k}\right)_1$

Therefore, according to AISC column specification, the working stress,

$$\sigma_w = \left[1 - \frac{\left(\frac{L_e}{k}\right)^2}{2\left(\frac{L_e}{k}\right)_1^2}\right]\frac{S_y}{n}$$

But safety factor, $$n = \frac{5}{3} + \frac{3\left(\frac{L_e}{k}\right)}{8\left(\frac{L_e}{k}\right)_1} - \frac{\left(\frac{L_e}{k}\right)^3}{8\left(\frac{L_e}{k}\right)_1^3}$$

$$\text{or, } n = \frac{5}{3} + \frac{3(92.89)}{8(125.66)} - \frac{(92.89)^3}{8(125.66)^3} = 1.89$$

Therefore, from Equation (i),

$$\sigma_w = \left[1 - \frac{(92.89)^2}{2\times 125.66^2}\right]\frac{250}{1.89} = 96.13 MPa$$

We have, $\sigma = \sigma_w = \frac{P}{A} + \frac{Pe}{Z}$

$$\text{or, } 96.13 = \frac{P}{2944} + \frac{P\times 40}{83.6\times 10^3}$$

$$\text{or, } P = 117.5kN \quad \textit{Answer}$$

Problem P7.34:

A $1.2m$ long pin ended steel column carries a central load of P. The c
rectangular cross-section, one of its side dimension is $30mm$ and the other
Using AISC column specifications, determine the smallest dimensi

(a) $P = 30kN$ a... ...ulus of elasticity $E = 200GPa$ and the yield strength $S_y = 250MPa$.

Given Data:

Length of column, $L = 1.2m$

Side dimension, $b = 30mm$

Central load, $P = 30kN$ and $60kN$

Yield strength, $S_y = 250MPa$

Modulus of elasticity, $E = 200GPa$

To Find:

. Smallest dimension, d for $P = 30kN$

. Smallest dimension, d for $P = 60kN$

Solution:

Limiting slenderness ratio, $\left(\frac{L_e}{k}\right)_l = \sqrt{\frac{2\pi^2 E}{S_y}} = \sqrt{\frac{2\pi^2 \times 200 \times 10^3}{250}} = 12$

Effective length of column, $L_e = L = 1.2m$ for pin ended column.

Let us assume that slenderness ratio of the column, $\frac{L_e}{k} > \left(\frac{L_e}{k}\right)_l$

Then according to AISC column specifications, the equation of the working stress,

$$\sigma_w = \frac{P}{A} = \frac{12\pi^2 E}{23\left(\frac{L_e}{k}\right)^2}$$

$$\text{or, } P = \frac{12\pi^2 EI}{23L_e^2}$$

$$\text{or, } I = \frac{23PL_e^2}{12\pi^2 E} \qquad (i)$$

For $P = 30kN$, substituting in Equation(i),

$$I = \frac{23 \times 30 \times 10^3 \times \left(1.2 \times 10^3\right)^2}{12\pi^2 \times 200 \times 10^3} = 41946.97mm^4$$

Let us assume side dimension, $d < b = 30mm$, then,

$$\frac{1}{12} \times 30 \times d^3 = 41946.97$$

$$\text{or, } d = 25.6mm$$

That is, the assumption has been made correctly.

Again for $d < b$, the least radius of gyration,

$$k = \frac{d}{\sqrt{12}} = \frac{25.6}{\sqrt{12}} mm = 7.39mm$$

Therefore, the slenderness ratio of the column,

$$\frac{L_e}{k} = \frac{1.2 \times 10^3}{7.39} = 162.38$$

That is, the slenderness ratio of the column, $\frac{L_e}{k} > \left(\frac{L_e}{k}\right)_1$, therefore, AISC specification considered correctly. So, the required dimension, $d = 25.6mm$ **Answer**

(b) For $P = 60kN$, substituting in Equation(i),

$$I = \frac{23 \times 60 \times 10^3 \times (1.2 \times 10^3)^2}{12\pi^2 \times 200 \times 10^3}$$

$$= 83893.94mm^4$$

Now let us assume that $d < b$, then,

$$\frac{1}{12} \times 30 \times d^3 = 83893.94$$

or, $d = 32.25mm$

That is, the assumption is not correct.

Let us consider $d > b$, then, $\frac{1}{12} \times d \times 30^3 = 83893.94$

or, $d = 37.29mm$

Here, the least value of the radius of gyration,

$$k = \frac{b}{\sqrt{12}} = \frac{30}{\sqrt{12}} mm = 8.66mm$$

Slenderness ratio of column, $\frac{L_e}{k} = \frac{1.2 \times 10^3}{8.66} = 138.57$

Here, $\frac{L_e}{k} > \left(\frac{L_e}{k}\right)_1$

So, the required dimension, $d = 37.29mm$ **Answer**

Problem P7.35:

A $50mm$ diameter column hinged at both ends supports an eccentric load of $30kN$ wi an eccentricity of $25mm$. Using maximum stress approach and AISC colum specifications, determine the largest length of the column that can be used. Consid modulus of elasticity $E = 200GPa$ and yield strength $S_y = 350MPa$.

Given Data:

Diameter of column, $d = 50mm$

Eccentricity, $e = 25mm$

Eccentric load, $P = 30kN$

Yield strength, $S_y = 350MPa$

Modulus of elasticity, $E = 200GPa$

To Find:

- Largest length, L

Solution:

Moment of inertia, $I = \frac{\pi d^4}{64} = \frac{\pi \times 50^4}{64} mm^4 = 306.80 \times 10^3 mm^4$

Cross-sectional area, $A = \frac{\pi d^2}{4} = \frac{\pi \times 50^2}{4} mm^2 = 1963.5 mm^2$

Radius of gyration, $k = \frac{d}{4} = \frac{50}{4} mm = 12.5 mm$

Section modulus, $Z = \frac{I}{c} = \frac{306.80 \times 10^6}{50/2} mm^3 = 12272 mm^3$

Limiting slenderness ratio, $\left(\frac{L_e}{k}\right)_1 = \sqrt{\frac{2\pi^2 E}{S_y}} = \sqrt{\frac{2\pi^2 \times 200 \times 10^3}{350}} = 106.21$

Let us assume that the slenderness ratio of the column, $\frac{L_e}{k} > \left(\frac{L_e}{k}\right)_1$

Then according to AISC column specifications, the equation of the working stress,

$$\sigma_w = \frac{12\pi^2 E}{23\left(\frac{L_e}{k}\right)^2} = \frac{12 \times \pi^2 \times 200 \times 10^3}{23 \times \left(\frac{L_e}{k}\right)^2} = \frac{102.99 \times 10^4}{\left(\frac{L_e}{k}\right)^2}$$

We have, $\sigma = \sigma_w = \frac{P}{A} + \frac{Pe}{Z}$

$$\text{or, } \frac{102.99 \times 10^4}{\left(\frac{L_e}{k}\right)^2} = \frac{30 \times 10^3}{1963.50} + \frac{30 \times 10^3 \times 25}{12272}$$

$$\text{or, } \frac{L_e}{k} = 116.11$$

That is, the slenderness ratio of the column,

$$\frac{L_e}{k} > \left(\frac{L_e}{k}\right)_1$$

Therefore, the equation used for the working stress is correct.

$$\frac{L_e}{k} = 116.11$$

$$\text{or, } L_e = 116.11 \times k = 116.11 \times 12.5 mm = 1451.38 mm = 1.45 m$$

That is, for hinged ends, the required length of the column, $L = L_e = 1.45 m$. *Answer*

roblem P7.36:

1m long column with square cross-section $(bmm \times bmm)$ is fixed at one end and free the other end as shown in Figure P7.36. If the column supports an eccentric load of *0kN* with an eccentricity of $\frac{b}{2} mm$, determine the dimension b. Consider modulus of asticity $E = 200GPa$ and yield strength $S_y = 250MPa$. Use maximum stress approach id AISC column specifications.

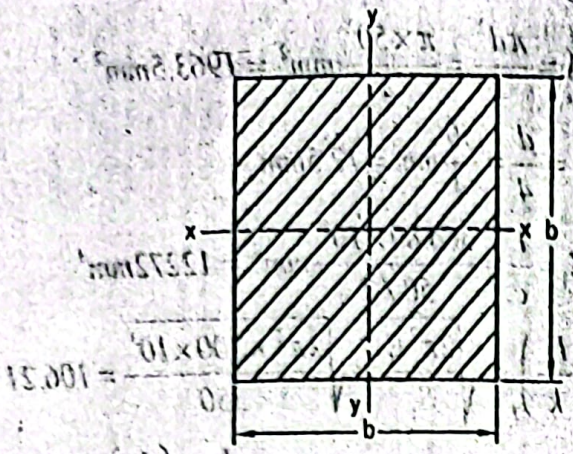

Figure P7.36

Given Data:

Length of column, $L = 1m$

Eccentric load, $P = 30kN$

Yield strength, $S_y = 250MPa$

Modulus of elasticity, $E = 200GPa$

To Find:

- Dimension, b

Solution:

Moment of inertia, $I = \dfrac{b^4}{12}$

Cross-sectional area, $A = b^2$

Radius of gyration, $k = \sqrt{\dfrac{I}{A}} = \sqrt{\dfrac{b^4}{12 \times b^2}} = \dfrac{b}{\sqrt{12}}$

Section modulus, $Z = \dfrac{I}{c} = \dfrac{b^4 \times 2}{12 \times b} = \dfrac{b^3}{6}$

Limiting slenderness ratio,

$$\left(\frac{L_e}{k}\right)_1 = \sqrt{\frac{2\pi^2 E}{S_y}} = \sqrt{\frac{2\pi^2 \times 200 \times 10^3}{250}} = 125.66$$

Effective length of column, $L_e = 2L = 2 \times 1.0m = 2m$ (Here $c = b/2$)

Slenderness ratio of column, $\dfrac{L_e}{k} = \dfrac{2 \times 10^3 \times \sqrt{12}}{b} = \dfrac{6928.20}{b}$

Let us assume that the slenderness ratio of the column,

$$\frac{L_e}{k} > \left(\frac{L_e}{k}\right)_1$$

Then according to AISC column specifications, the equation of the working stress,

$$\sigma_w = \frac{12\pi^2 E}{23\left(\dfrac{L_e}{k}\right)^2} = \frac{12 \times \pi^2 \times 200 \times 10^3}{23 \times \left(\dfrac{6928.2}{b}\right)^2} MPa = 0.0215 b^2 MPa$$

We have, $\sigma = \sigma_w = \frac{P}{A} + \frac{Pe}{Z_x}$

or, $0.0125b^2 = \frac{30\times10^3}{b^2} + \frac{30\times10^3\times b/2}{b^3/6}$

or, $0.0125b^2 = \frac{12\times10^4}{b^2}$

or, $b = 48.6mm$

$$\frac{L_e}{k} = \frac{6928.20}{b} = \frac{6928.20}{48.6} = 142.56$$

That is, the slenderness ratio of the column,

$$\frac{L_e}{k} > \left(\frac{L_e}{k}\right)_1$$

Therefore, our assumption was correct.

Hence, the required dimension, $b = 48.6mm$ *Answer*

Problem P7.37:

A column is made of $W250\times115$ section. If the effective length of the column is $8m$, determine the maximum load that can be applied to the column with an eccentricity of $250mm$ on the (a) x-axis and (b) y-axis. Consider modulus of elasticity $E = 200GPa$ and yield strength $S_y = 360MPa$. Use maximum stress approach and AISC column specifications.

Given Data:

Section of column, $W250\times115$

Effective length of column, $L_e = 8m$

Eccentricity, $e = 250mm$

Yield strength, $S_y = 360MPa$

Modulus of elasticity, $E = 200GPa$

To Find:

Maximum load, P

Solution:

Properties of $W250\times115$ section from Table (Appendix A7) are:

$A = 14600mm^2$

$I_x = 189\times10^6\ mm^4$

$k_x = 114mm$

$Z_x = 1410\times10^3\ mm^3$

$I_y = 64.1\times10^6\ mm^4$

$Z_y = 495\times10^3\ mm^3$

$k_y = 66.3mm$

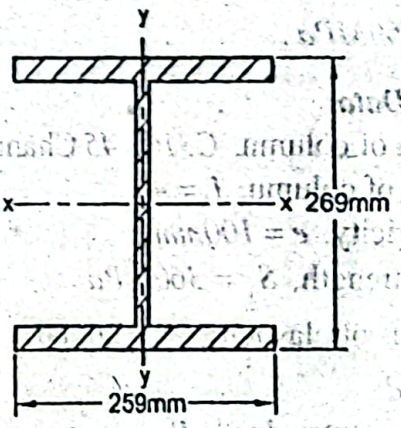

Limiting slenderness ratio, $\left(\frac{L_e}{k}\right)_1 = \sqrt{\frac{2\pi^2 E}{S_y}} = \sqrt{\frac{2\pi^2 \times 200 \times 10^3}{360}} = 104.72$

Least radius of gyration, $k = k_y = 66.3mm$

Slenderness ratio of column, $\frac{L_e}{k} = \frac{8 \times 10^3}{66.3} = 120.66$

Here the slenderness ratio of the column,

$$\frac{L_e}{k} > \left(\frac{L_e}{k}\right)_1$$

Therefore, according to AISC specifications, the equation of the working stress.

$$\sigma_w = \frac{12\pi^2 E}{23\left(\frac{L_e}{k}\right)^2} = \frac{12 \times \pi^2 \times 200 \times 10^3}{23 \times (120.66)^2} MPa = 70.74MPa$$

We have, $\sigma = \sigma_w = \frac{P}{A} + \frac{Pe}{Z}$

(a) On the x-axis, $\sigma_w = \frac{P}{A} + \frac{Pe}{Z_x}$

or, $70.74 = \frac{P}{14600} + \frac{P \times 250}{1410 \times 10^3}$

or, $P = 287.80kN$ Answer

(b) On the y-axis, $\sigma_w = \frac{P}{A} + \frac{Pe}{Z_y}$

or, $70.74 = \frac{P}{14600} + \frac{P \times 250}{495 \times 10^3}$

or, $P = 123.34kN$ Answer

Problem P7.38:

A $4m$ long column with hinged ends is made by welding two $C310 \times 45$ channels back to back. If an eccentric load of P is placed on the minor axis with an eccentricity of $100mm$, using AISC column specifications determine the safe eccentric load P that can be applied. Consider modulus of elasticity $E = 200GPa$, and yield strength $S_y = 360MPa$.

Given Data:

Section of column, $C310 \times 45$ Channel

Length of column, $L = 4m$

Eccentricity, $e = 100mm$

Yield strength, $S_y = 360MPa$

Modulus of elasticity, $E = 200GPa$

To Find:

- Safe eccentric load, P

Solution:

Properties of $C310\times45$ section from Table (Appendix A9) are:

$$A = 5690mm^2$$
$$I_x = 67.3\times10^6\ mm^4$$
$$k_x = 109mm$$
$$Z_x = 442\times10^3\ mm^3$$
$$I_y = 2.12\times10^6\ mm^4$$
$$Z_y = 33.6\times10^3\ mm^3$$
$$k_y = 19.3mm$$
$$x = 17mm$$

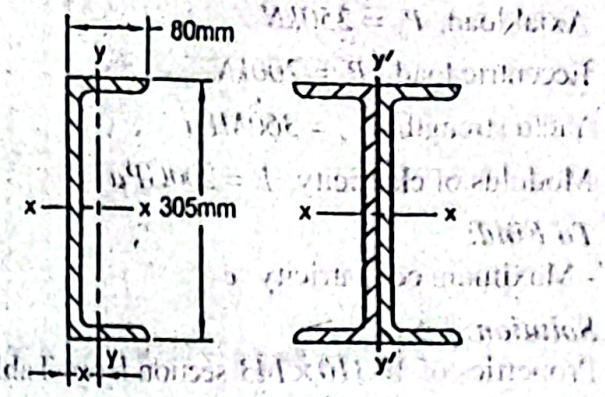

Least radius of gyration, $k_{y'} = k_y^2 + d^2 = 19.3^2 + 17^2$

or, $k_{y'} = 25.72mm = k$

For hinged ends, the effective length of the column,

$$L_e = L = 4m$$

Slenderness ratio of column, $\frac{L_e}{k} = \frac{4\times10^3}{25.72} = 155.52$

Limiting slenderness ratio, $\left(\frac{L_e}{k}\right)_l = \sqrt{\frac{2\pi^2E}{S_{y'}}} = \sqrt{\frac{2\pi^2\times200\times10^3}{360}} = 104.72$

That is, the slenderness ratio of the column,

$$\frac{L_e}{k} > \left(\frac{L_e}{k}\right)_l$$

Then according to AISC column specifications, the equation of the working stress,

$$\sigma_w = \frac{12\pi^2E}{23\left(\frac{L_e}{k}\right)^2} = \frac{12\times\pi^2\times200\times10^3}{23\times(155.52)^2}MPa = 42.58MPa$$

We have, $\sigma = \sigma_w = \frac{P}{A} + \frac{Pe}{Z_x}$

(Here Z_x is used because the load is placed on the minor axis $y'-y'$)

$$\text{or, } 42.58 = \frac{P\times10^3}{2\times5690} + \frac{P\times10^3\times100}{2\times442\times10^3}$$

$$\text{or, } P = 211.85\ Answer$$

Problem P7.39:

A column of effective length $5m$ uses $W310\times143$ section. The column carries an axial load of $250kN$ and an eccentric load of $200kN$. Determine the maximum eccentricity e if the eccentric load is applied on the minor axis. Consider yield strength $S_y = 360MPa$ and modulus of elasticity $E = 200GPa$. Use maximum stress approach and AISC column specifications.

Section of column = $W310\times143$

Effective length, $L_e = 5m$

Axial load, $P_a = 250kN$

Eccentric load, $P_e = 200kN$

Yield strength, $S_y = 360MPa$

Modulus of elasticity, $E = 200GPa$

To Find:

- Maximum eccentricity, e

Solution:

Properties of $W310\times143$ section from Table (Appendix A7) are:

$A = 18200mm^2$

$I_x = 348\times10^6\ mm^4$

$k_x = 138mm$

$Z_x = 2150\times10^3\ mm^3$

$I_y = 113\times10^6\ mm^4$

$Z_y = 729\times10^3\ mm^3$

$k_y = 73.8mm$

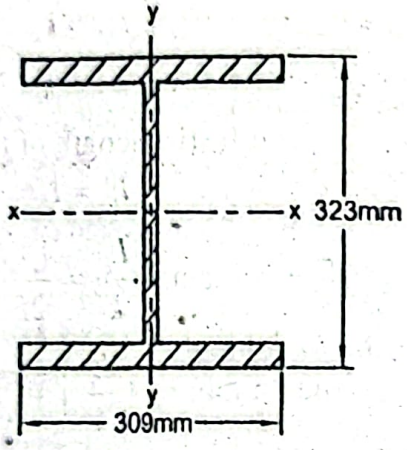

Limiting slenderness ratio, $\left(\frac{L_e}{k}\right)_l = \sqrt{\frac{2\pi^2E}{S_y}} = \sqrt{\frac{2\pi^2\times200\times10^3}{360}} = 104.72$

Least radius of gyration, $k = k_y = 78.8mm$

Slenderness ratio of column, $\frac{L_e}{k} = \frac{5\times10^3}{78.8} = 63.45$

That is, the slenderness ratio of the column,

$$\frac{L_e}{k} < \left(\frac{L_e}{k}\right)_l$$

Therefore, according to AISC column specifications, the working stress,

$$\sigma_w = \left[1 - \frac{\left(\frac{L_e}{k}\right)^2}{2\left(\frac{L_e}{k}\right)_l^2}\right]\frac{S_y}{n} \qquad (i)$$

But safety factor, $n = \frac{5}{3} + \frac{3\left(\frac{L_e}{k}\right)}{8\left(\frac{L_e}{k}\right)_l} - \frac{\left(\frac{L_e}{k}\right)^3}{8\left(\frac{L_e}{k}\right)_l^3}$

$$\text{or, } n = \frac{5}{3} + \frac{3(63.45)}{8(104.72)} - \frac{(63.75)^3}{8(104.72)^3} = 1.87$$

Therefore, from Equation (i), $\sigma_w = \left[1 - \frac{(63.45)^2}{2\times 104.72^2}\right]\frac{360}{1.87} = 157.18MPa$

For maximum stress approach, $\sigma = \sigma_w = \frac{P_a + P_e}{A} + \frac{P_e \times e}{Z_x}$

(Here Z_x is used because the eccentric load is on the minor axis, that is, y-axis)

$$\text{or, } 157.18 = \frac{(250+200)\times 10^3}{18200} + \frac{200\times 10^3 \times e}{2150\times 10^3}$$

$$\text{or, } e = 1424mm \approx 1.42m \text{ Answer}$$

Problem P7.40:

A column is made of $W310\times 118$ section. The column carries an axial load and an eccentric load of equal magnitude. The eccentric load is located on the minor axis with an eccentricity of $300mm$. The length of the column is $6m$ with both ends hinged. Using maximum stress approach and AISC column specifications, determine the load. Consider yield strength $S_y = 360MPa$ and modulus of elasticity $E = 200GPa$.

Given Data:

Section of column $= W310\times 118$

Eccentricity, $e = 300mm$

Length of column, $L = 6m$

Yield strength, $S_y = 360MPa$

Modulus of elasticity, $E = 200GPa$

To Find:

- Axial load and eccentric load, P

Solution:

Properties of $W310\times 118$ section from Table (Appendix A7) are:

$A = 15000mm^2$

$I_x = 275\times 10^6\ mm^4$

$k_x = 135mm$

$Z_x = 1750\times 10^3\ mm^3$

$I_y = 90.2\times 10^6\ mm^4$

$Z_y = 588\times 10^3\ mm^3$

$k_y = 77.5mm$

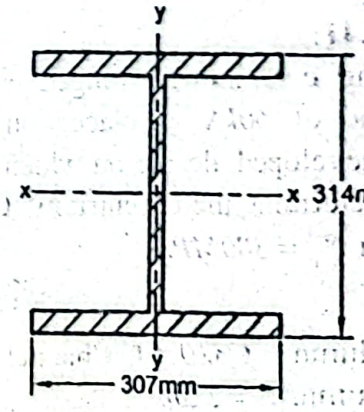

Limiting slenderness ratio, $\left(\frac{L_e}{k}\right)_l = \sqrt{\frac{2\pi^2 E}{S_y}} = \sqrt{\frac{2\pi^2\times 200\times 10^3}{360}} = 104.72$

For hinged ends, the effective length,

$$L_e = L = 6m$$

Least radius of gyration, $k = k_y = 77.5mm$

Slenderness ratio of column, $\frac{L_e}{k} = \frac{6\times10^3}{77.5} = 77.42$

That is, the slenderness ratio of the column,

$$\frac{L_e}{k} < \left(\frac{L_e}{k}\right)_1$$

Therefore, according to AISC column specifications, the working stress,

$$\sigma_w = \left[1 - \frac{\left(\frac{L_e}{k}\right)^2}{2\left(\frac{L_e}{k}\right)_1^2}\right]\frac{S_y}{n} \qquad (i)$$

But safety factor, $n = \frac{5}{3} + \frac{3\left(\frac{L_e}{k}\right)}{8\left(\frac{L_e}{k}\right)_1} - \frac{\left(\frac{L_e}{k}\right)^3}{8\left(\frac{L_e}{k}\right)_1^3}$

or, $n = \frac{5}{3} + \frac{3\times77.42}{8\times104.72} - \frac{(77.42)^3}{8\times104.72^3} = 1.89$

Therefore, from Equation (i), $\sigma_w = \left[1 - \frac{(77.42)^2}{2\times104.72^2}\right]\frac{360}{1.89} = 138.42MPa$

We have, $\sigma = \sigma_w = \frac{(P+P)\times10^3}{A} + \frac{P\times10^3\times e}{Z_x\times10^3}$

Substituting the values, $138.42 = \frac{2P\times10^3}{15000} + \frac{P\times10^3\times300}{1750\times10^3}$

or, $P = 454.19kN$ *Answer*

Problem P7.41:

A $2.5m$ long column with hinged ends is made of $C310\times45$ channel section. An eccentric load of $60kN$ is placed on the major axis (x-axis). If a tensile stress of $130MPa$ is developed, decide on which side of the minor axis (y-axis), the load must be placed and determine the eccentricity. Consider modulus of elasticity $E = 200GPa$ and yield strength $S_y = 380MPa$.

Given Data:

Section of column = $C310\times45$ Channel

Length of column, $L = 2.5m$

Eccentric load, $P = 60kN$

Yield strength, $S_y = 380MPa$

Tensile stress developed, $\sigma_{tw} = 130MPa$

Modulus of elasticity, $E = 200GPa$

To Find:

- Side of minor axis where load is to be placed
- Eccentricity, e

Solution:

Properties of $C310\times45$ section from Table (Appendix A9) are:

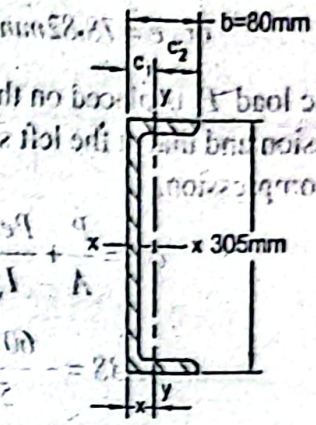

$A = 5690mm^2$

$I_y = 2.12\times10^6\ mm^4$

$k_y = 19.3mm$

$x = 17mm$

$b = 80mm$

Here, $c_1 = x = 17mm$

and, $c_2 = (b-x) = (80-17)mm = 63mm$

For hinged ends, the effective length of the column,

$$L_e = L = 2.5m$$

Least radius of gyration, $k = k_y = 19.3mm$

Slenderness ratio of the column,

$$\frac{L_e}{k} = \frac{2.5\times10^3}{19.3} = 129.53$$

Limiting slenderness ratio,

$$\left(\frac{L_e}{k}\right)_l = \sqrt{\frac{2\pi^2E}{S_y}} = \sqrt{\frac{2\pi^2\times200\times10^3}{380}} = 101.93$$

Here the slenderness ratio of the column,

$$\frac{L_e}{k} > \left(\frac{L_e}{k}\right)_l$$

Therefore, according to AISC column specifications, the equation of the working stress,

$$\sigma_w = \frac{12\pi^2E}{23\left(\frac{L_e}{k}\right)^2} = \frac{12\times\pi^2\times200\times10^3}{23\times(129.53)^2}MPa = 61.38MPa$$

If the eccentric load P_{lb} is placed on the left side of y-axis, there will be compression at the left side and tension at the right side.

Considering compression,

$$\sigma_w = \frac{P}{A} + \frac{Pec_1}{I_y}$$

$$\text{or, } 61.38 = \frac{60\times10^{3}}{5690} + \frac{60\times10^{3}\times e\times 63}{2.12\times10^{6}}$$

$$\text{or, } e = 105.66mm$$

Considering tension,

$$\sigma_w = -\frac{P}{A} + \frac{Pec_2}{I_y}$$

$$\text{or, } 130 = -\frac{60\times10^{3}}{5690} + \frac{60\times10^{3}\times e\times 63}{2.12\times10^{6}}$$

$$\text{or, } e = 78.82mm$$

If the eccentric load P is placed on the right side of y-axis, the fiber at the right side wi be in compression and that at the left side will be in tension.

Considering compression,

$$\sigma_w = \frac{P}{A} + \frac{Pec_2}{I_y}$$

$$\text{or, } 61.38 = -\frac{60\times10^{3}}{5690} + \frac{60\times10^{3}\times e\times 63}{2.12\times10^{6}}$$

$$\text{or, } e = 28.51mm$$

Considering tension, $\sigma_w = -\frac{P}{A} + \frac{Pec_1}{I_y}$

$$\text{or, } 130 = -\frac{60\times10^{3}}{5690} + \frac{60\times10^{3}\times e\times 17}{2.12\times10^{6}}$$

$$\text{or, } e = 292.11mm$$

It is seen that at the left side limiting tensile stress will dominate and the eccentricity should not exceed $78.82mm$ while at the right side compressive stress will dominate and the eccentricity should not exceed $28.51mm$. Therefore, the eccentric load must be placed at the left side and the required value of eccentricity, $e = 78.82mm$ ***Answer***

EXERCISES

Problem E7.1:

Determine the slenderness ratio of a $6m$ long column with one end fixed and other end rounded if the column is (a) circular with diameter of $100mm$ and (b) square with side dimension of $100mm$.

Ans.: $(a)\ L_e / k = 168;\ L_e / k = 145.48$

Problem E7.2:

A $2m$ long pin ended aluminum tube of outside diameter $16mm$ and wall thickness of $1.25mm$ is loaded centrally. Determine the critical load using Euler's formula. Consider modulus of elasticity of aluminum $E = 70GPa$.

Ans.: $P_{cr} = 274N$

Problem E7.3:

A timber column with fixed ends has cross-section $75mm \times 125mm$. Modulus of elasticity E and proportional limit S_p are respectively $10GPa$ and $30MPa$. Find the minimum length of the column at which Euler's formula can be used. Also determine the safe central load that can be carried for a safety factor of 2.5 and length of $3.0m$.

Ans.: Minimum length, $L = 2.48m$; $P = 77.03kN$

Problem E7.4:

Two steel channels $C310 \times 45$ are welded back to back to make a column. Using Euler's formula, determine the safe central load that can be carried by the column with a factor of safety of 2.5 if the effective length of the column is $5.0m$. Consider modulus of elasticity $E = 200GPa$.

Ans.: $P = 237.82kN$

Problem E7.5:

A hollow circular steel column with rounded ends is to support an axial load of $50kN$. If the outside diameter of the column d_o is twice to its inside diameter and the length of the column is $4m$, determine the diameter of the column using AISC column specifications. Consider yield strength $S_y = 360MPa$ and modulus of elasticity $E = 200GPa$.

Ans.: $d_o = 64.10mm$

Problem E7.6:

A column with hinge ends is made of $W250 \times 167$ section. Using AISC column specifications find the safe axial load that can be carried when the length is (a) $9m$ and (b) $4m$. Consider yield strength $S_y = 380MPa$ and modulus of elasticity $E = 200GPa$.

Ans.: $(a)\, P = 1255.85kN$ $(b)\, P = 3835.28kN$

Problem E7.7:

A pin ended column is made of $W200 \times 100$ section. Find the maximum length of the column for which Johnson's formula is valid. If the length of the column is $4m$, determine the safe axial load that can be carried by the column with a safety factor of 2.5. Consider yield strength $S_y = 360MPa$ and modulus of elasticity $E = 200GPa$.

Ans.: $L = 5.62m$; $P = 1366kN$

Problem E7.8:

A circular steel column of length $1.25m$ is subjected to an eccentric load of $140kN$ with an eccentricity of $15mm$. The column is fixed at one end and free at the other end. Using Secant formula find the diameter of the column if allowable normal stress is $100MPa$ and modulus of elasticity is $200GPa$.

Ans.: $d = 76.5mm$

Problem E7.9:

A column is made of $W360\times110$ section, The column supports an axial load of 200k and an eccentric load. If the effective length of the column is $8m$ and the eccentric lo is placed on the minor axis at a distance of $500mm$ from the major axis. find t eccentric load. Consider yield strength $S_y = 320MPa$ and modulus of elastici $E = 200GPa$. Use maximum stress approach and AISC column specifications.

Ans.: $P_e = 145.06k$

Chapter VIII
Plane Stress and Strain

Question 8.1: Discuss the various stress components of a stress element.

Answer:

Before discussing about the stress components of a stress element, it will be relevant to define the stress at a point. When the stress is uniformly distributed over an area, the stress is obtained by simply dividing the force by the area on which the force acts. In general, however, the stress is not uniformly distributed over a cross-section of a material body and consequently the stress at a point on a given area is different from the average stress over the entire area. In case of non-uniform distribution of the stress over an area, the *stress at a point* is defined as the elemental force divided by the elemental area encompassing that point on which the elemental force acts and the stress on that elemental area is uniform. Mathematically, *stress at a point* is obtained as,

$$\sigma = Lt_{\Delta A \to 0} \frac{\Delta P}{\Delta A} = \frac{dP}{dA} \tag{8.1}$$

When a point consists of many stress components a differential cubical element is assumed to encompass that point and the various stress components are considered on that differential cubical element. Such a three-dimensional stress element is shown in Figure 8.1a. It consists of three normal stress components σ_x, σ_y and σ_z and six shear stress components $\tau_{xy}, \tau_{yx}, \tau_{yz}, \tau_{zy}, \tau_{zx}$ and τ_{xz}. All the normal stress and shear stress components as shown in Figure 8.1a are in the positive direction.

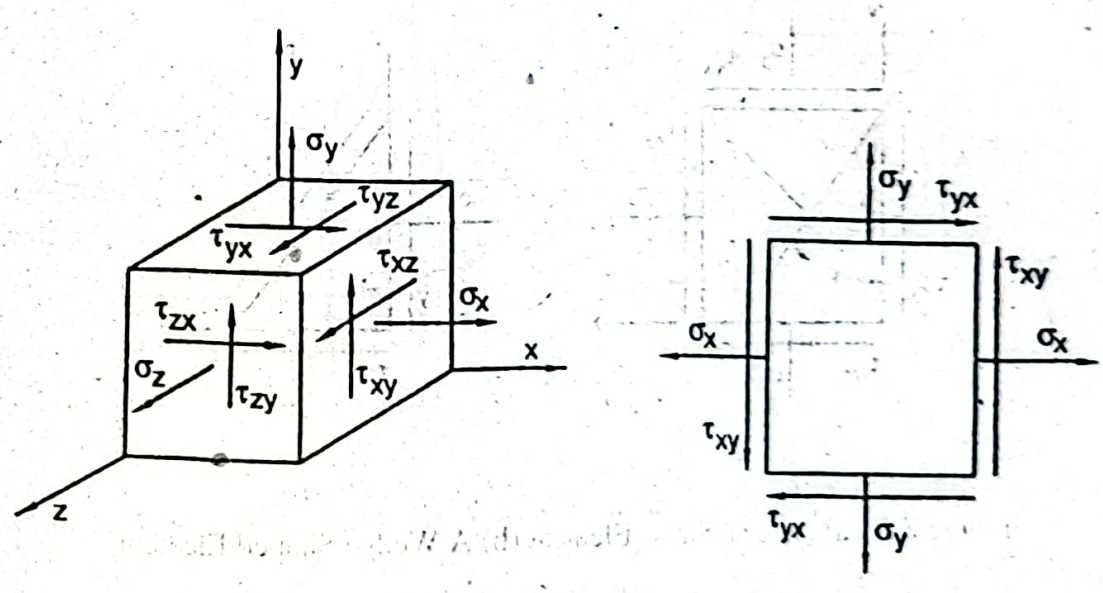

(a) (b)

Figure 8.1: (a) A Three-Dimensional Stress Element.
(b) A Bi-axial Stress Element.

The normal stress σ_x acts perpendicularly on the x-plane (plane perpendicular to the axis) in the x-direction, in other words it acts in the outer direction and therefore, th stress is tensile stress and is positive. Similarly, σ_y and σ_z are tensile stresses and the are also positive. The shear stress τ_{xy} acts in the x-plane and in the y-direction. The fir letter 'x' of the subscript indicates the x-plane on which it acts and the second letter ' indicates the direction. In this condition it is said to be positive. Similarly, the other shea stress components behave and all of them are positive as shown in Figure 8.1a. On th other sides of the differential cubical element the normal and shear stresses are als present. In the static equilibrium condition,

$$\tau_{xy} = \tau_{yx}, \tau_{yz} = \tau_{zy} \text{ and, } \tau_{zx} = \tau_{xz} \qquad (8.2$$

The two-dimensional view of the stress element in the x-y plane is shown in Figure 8.1b This is called *bi-axial stress*. This bi-axial stress is often called *plane stress*. Sign convention so far used is the *classical sign convention*. The two normal stresses as shown in Figure 8.1b are positive. However, for the shear stresses classical sign convention is not usually followed for convenience. Shear stress is considered as positive when it acts in the clockwise (*cw*) direction. Thus in Figure 8.1b τ_{xy} is positive. On the other hand τ_{yx} is in the counterclockwise (*ccw*) direction, hence it is negative.

Question 8.2: What are principal stresses? Derive expressions of principal stresses.

Answer:

In a stress element there are planes on which shear stress is zero and normal stress is either maximum or minimum, these normal stresses are called the *principal stresses*.

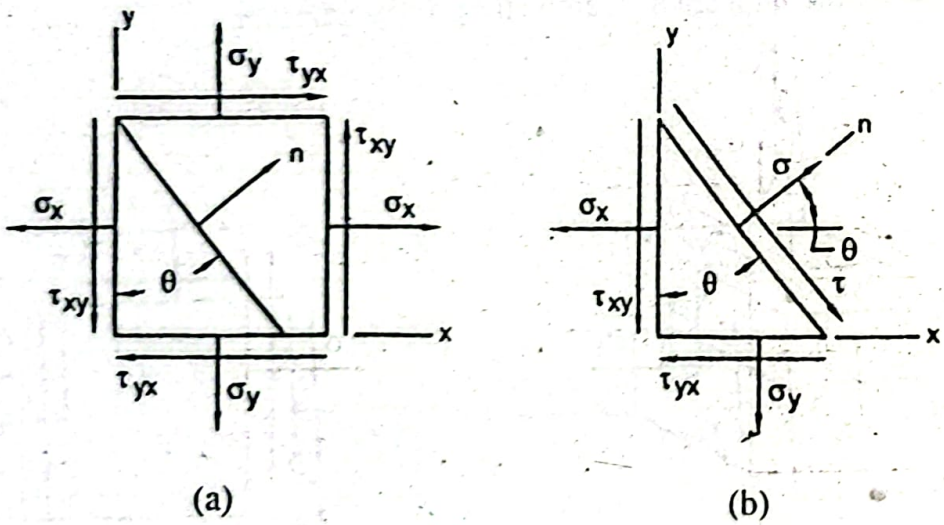

Figure 8.2: (a) A Plane Stress Element (b) A Wedge Shaped Element.

Figure 8.2a shows a bi-axial stress element from where a wedge shaped element as shown in Figure 8.2b has been cut. The slanting plane of the wedge element makes an angle θ with the y-axis. On the slanting plane normal and shear stresses are denoted by σ and τ respectively. The surface area of the slanting plane is dA. In the static equilibrium condition the summation of all the force components in the slanting plane along the normal direction n is zero, therefore,

$$\Sigma P_n = 0:$$

$$\text{or, } \sigma dA - (\sigma_x dA\cos\theta)\cos\theta - (\sigma_y dA\sin\theta)\sin\theta$$

$$-(\tau_{xy} dA\cos\theta)\sin\theta - (\tau_{yx} dA\sin\theta)\cos\theta = 0$$

Canceling dA throughout and rearranging,

$$\sigma = \sigma_x \cos^2\theta + \sigma_y \sin^2\theta + \tau_{xy}\sin\theta\cos\theta + \tau_{yx}\sin\theta\cos\theta \qquad (8.3)$$

But we know,

$$\tau_{xy} = \tau_{yx}$$

$$\cos^2\theta = \frac{1+\cos 2\theta}{2}$$

$$\sin^2\theta = \frac{1-\cos 2\theta}{2}$$

$$\text{and, } \sin\theta\cos\theta = \frac{1}{2}\sin 2\theta$$

Substituting these values in Equation (8.3) and simplifying,

$$\sigma = \frac{\sigma_x + \sigma_y}{2} + \frac{\sigma_x - \sigma_y}{2}\cos 2\theta + \tau_{xy}\sin 2\theta \qquad (8.4)$$

Now differencing Equation (8.4) with respect to θ and setting it equal to zero for maximum or minimum values of normal stresses, one finds,

$$\tan 2\theta = \frac{2\tau_{xy}}{\sigma_x - \sigma_y} \qquad (8.5)$$

From Equation (8.5) two values of 2θ are obtained and they differ by 180^0. Hence the planes on which the maximum and minimum normal stresses occur, differ by 90^0, that is, the plane containing the maximum normal stress component is perpendicular to the plane containing the minimum normal stress component. When the value of the angle, θ is positive, it occurs in the clockwise direction and vise versa.

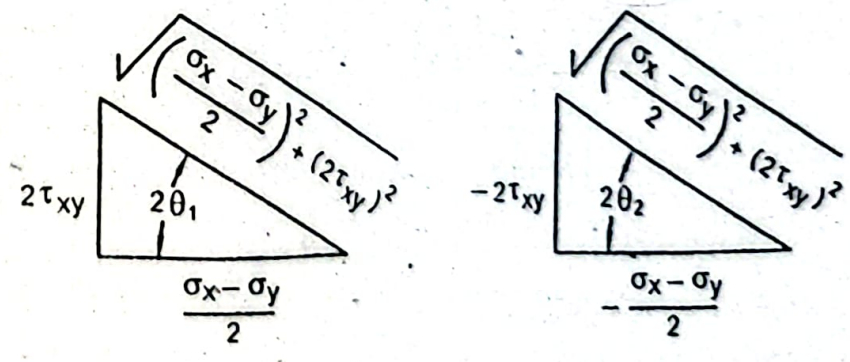

(a) (b)

Figure 8.3: Relation for Angle, 2θ.

From Figure 8.3a, the relations of $2\theta_1$ are obtained as,

$$\sin 2\theta_1 = \frac{2\tau_{xy}}{\sqrt{\left(\frac{\sigma_x - \sigma_y}{2}\right)^2 + (2\tau_{xy})^2}}$$

$$\text{and, } \cos 2\theta_1 = \frac{\frac{\sigma_x - \sigma_y}{2}}{\sqrt{\left(\frac{\sigma_x - \sigma_y}{2}\right)^2 + (2\tau_{xy})^2}}$$

Substituting these values in Equation (8.4) and simplifying, the expression of maximum principal stress is obtained as,

$$\sigma_1 = \frac{\sigma_x + \sigma_y}{2} + \sqrt{\left(\frac{\sigma_x - \sigma_y}{2}\right)^2 + \tau_{xy}^2}$$

Similarly, from Figure 8.3b, finding relations of $2\theta_2$ and substituting them in Equation (8.4), the expression of the minimum principal stress is found as,

$$\sigma_2 = \frac{\sigma_x + \sigma_y}{2} - \sqrt{\left(\frac{\sigma_x - \sigma_y}{2}\right)^2 + \tau_{xy}^2}$$

Now both of the above expressions can be written as,

$$\sigma_1, \sigma_2 = \frac{\sigma_x + \sigma_y}{2} \pm \sqrt{\left(\frac{\sigma_x - \sigma_y}{2}\right)^2 + \tau_{xy}^2} \qquad (8.6)$$

The normal stresses σ_1 and σ_2 are called the *principal stresses* and the planes on which they act are called the *principal planes*.

Question 8.3: Derive an expression of maximum shearing stress.

Answer:

Summing all the force components along the tangential direction on the slanting plane of the wedge element as shown in Figure 8.2b and setting it equal to zero for maximum shearing stress, one finds,

$$\Sigma P_t = 0:$$

$$\text{or, } \tau dA - (\sigma_x dA \cos\theta)\sin\theta + (\sigma_y dA \sin\theta)\cos\theta$$

$$+ (\tau_{xy} dA \cos\theta)\cos\theta - (\tau_{yx} dA \sin\theta)\sin\theta = 0$$

Canceling dA throughout and rearranging,

$$\tau = \sigma_x \sin\theta\cos\theta - \sigma_y \sin\theta\cos\theta - \tau_{xy}\cos^2\theta + \tau_{yx}\sin^2\theta \qquad (8.7)$$

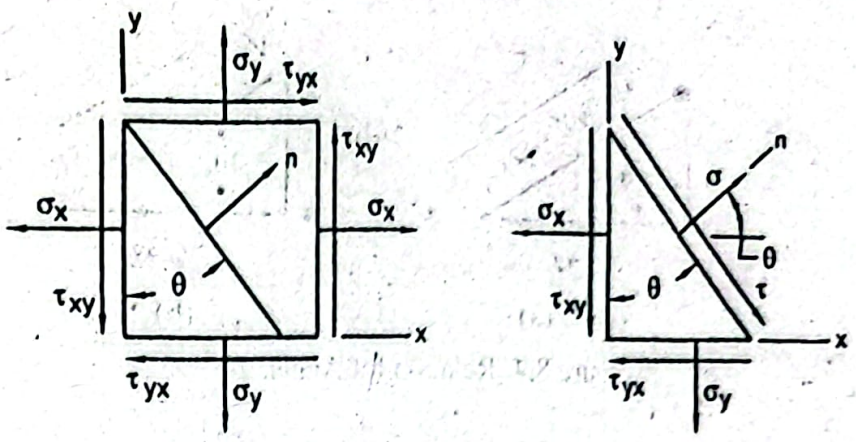

Figure 8.2: (a) A Plane Stress Element (b) A Wedge Shaped Element.

But we have,

$$\tau_{xy} = \tau_{yx}$$

$$\cos^2\theta = \frac{1+\cos 2\theta}{2}$$

$$\sin^2\theta = \frac{1-\cos 2\theta}{2}$$

$$\text{and, } \sin\theta\cos\theta = \frac{1}{2}\sin 2\theta$$

Using these values in Equation (8.7) and simplifying, one finds,

$$\tau = \frac{\sigma_x - \sigma_y}{2}\sin 2\theta - \tau_{xy}\cos 2\theta \qquad (8.8)$$

Now differentiating Equation (8.8) with respect to θ and setting it equal to zero for maximum shearing stress, one obtains,

$$\tan 2\theta_s = -\frac{\sigma_x - \sigma_y}{2\tau_{xy}} \qquad (8.9)$$

Equation (8.9) gives two values of $2\theta_s$ and they differ by 180^0. Therefore, angle θ_s gives two values, which differ by 90^0. This indicates that the maximum shearing stress occurs in two planes at 90^0 apart. When the value of the angle θ_s is positive, it occurs in clockwise direction and vise versa.

To obtain the planes of zero shearing stress τ is set to zero in Equation (8.8) and we find,

$$\tan 2\theta = \frac{2\tau_{xy}}{\sigma_x - \sigma_y} \qquad (8.10)$$

Now comparing Equations (8.5) and (8.10), it can be observed that the principal stresses occur at the planes of zero shears.

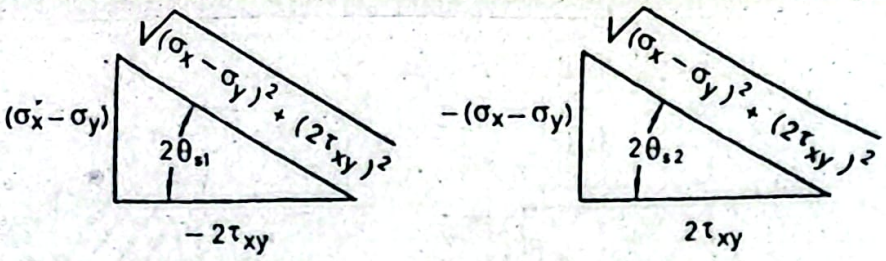

(a) (b)

Figure 8.4: Relation for Angle, $2\theta_s$.

From Figure 8.4a, the relations of $2\theta_{s1}$ are obtained as,

$$\sin 2\theta_{s1} = \frac{\sigma_x - \sigma_y}{\sqrt{(\sigma_x - \sigma_y)^2 + (2\tau_{xy})^2}}$$

$$\text{and, } \cos 2\theta_{s1} = \frac{-2\tau_{xy}}{\sqrt{(\sigma_x - \sigma_y)^2 + (2\tau_{xy})^2}}$$

Substituting these values in Equation (8.8) and simplifying, the expression of the maximum shearing stress is obtained as,

$$\tau_{max} = \sqrt{\left(\frac{\sigma_x - \sigma_y}{2}\right)^2 + \tau_{xy}^2}$$

Similarly, finding the relations of $2\theta_{s2}$, substituting them in Equation (8.8) and simplifying, the expression of the maximum shearing stress is found as,

$$\tau_{max} = -\sqrt{\left(\frac{\sigma_x - \sigma_y}{2}\right)^2 + \tau_{xy}^2}$$

Therefore; from the above two equations, the expression of the maximum shearing stress can be written as,

$$\tau_{max} = \pm\sqrt{\left(\frac{\sigma_x - \sigma_y}{2}\right)^2 + \tau_{xy}^2} \qquad (8.11)$$

Now from Equations (8.6) and (8.11), the relation of the maximum shearing stress can be found as,

$$\tau_{max} = \pm\frac{\sigma_1 - \sigma_2}{2} \qquad (8.12)$$

Question 8.4: Find the expressions of principal stresses and maximum shearing stress for a plane stress element using Mohr's circle.

Answer:

In 1882 German Engineer Otto Mohr introduced a graphical method to interpret the stress components visually. He plotted the stress components of a stress element on a $\sigma - \tau$

plane using a circle. This circle is called *Mohr's circle*. The tensile and compressive stresses are plotted at the right and left side of the τ-axis respectively. Shearing stresses acting in the clockwise direction and the counterclockwise direction are plotted above and below the σ-axis respectively. When the plotting is done to a scale, the results can be determined graphically.

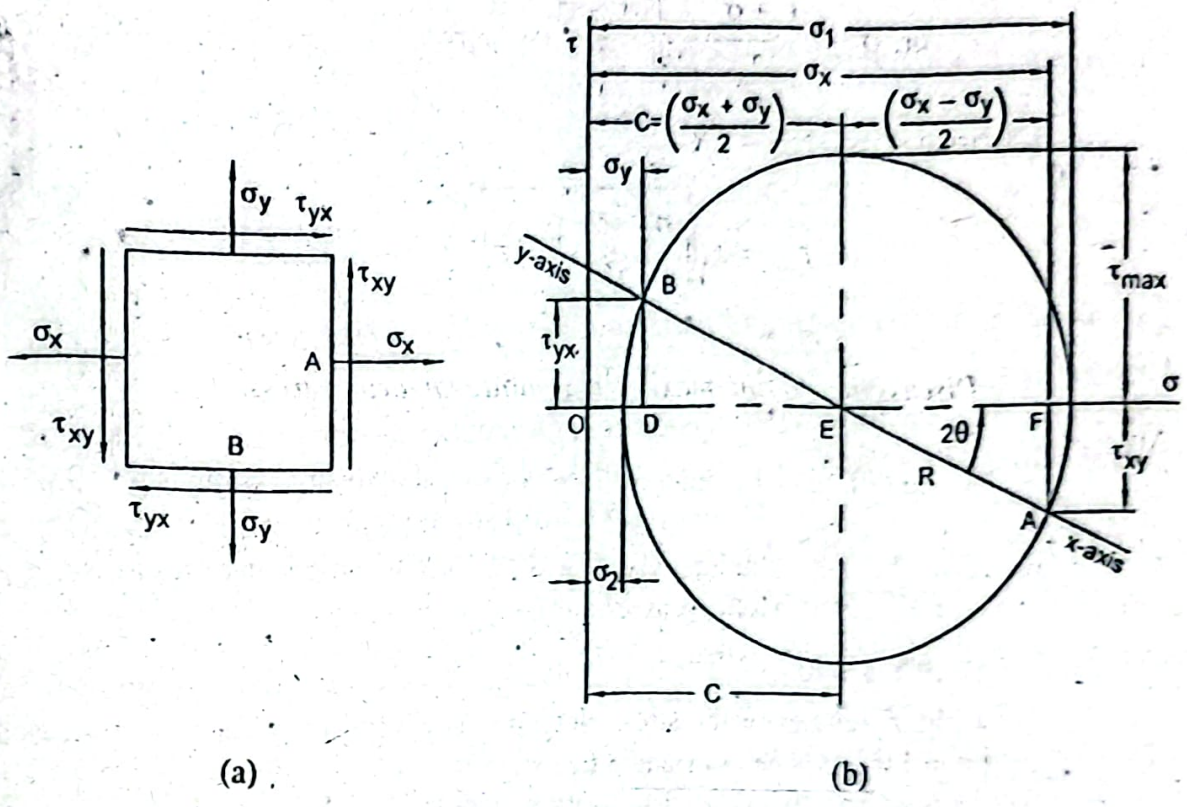

(a) (b)

Figure 8.5: (a) A Plane Stress Element (b) Mohr's Circle.

A plane stress element with planes A and B is shown in Figure 8.5a. Two co-ordinates (σ_x, τ_{xy}) and (σ_y, τ_{yx}) of this plane stress element are plotted in $\sigma - \tau$ plane which are shown by the points *A* and *B* in Figure 8.5b. The line joining *AB* is the diameter of Mohr's circle. In Figure 8.5a, *x*-axis and *y*-axis differ by 90^0 whereas in Mohr's circle they differ by 180^0. That is, in Mohr's circle the angle is always twice than that occurs in the stress element.

In Figure 8.5b the distance, $DF = \sigma_x - \sigma_y$

Therefore, $DE = EF = \dfrac{\sigma_x - \sigma_y}{2}$

Radius of the Mohr's circle, $R = \sqrt{EF^2 + AF^2} = \sqrt{\left(\dfrac{\sigma_x - \sigma_y}{2}\right)^2 + \tau_{xy}^2}$ (8.13)

Distance of the center of circle, $C = OD + DE = \sigma_y + \dfrac{\sigma_x - \sigma_y}{2} = \dfrac{\sigma_x + \sigma_y}{2}$ (8.14)

Principal stresses, $\sigma_1 = C + R$

$$\text{or, } \sigma_1 = \frac{\sigma_x + \sigma_y}{2} + \sqrt{\left(\frac{\sigma_x - \sigma_y}{2}\right)^2 + \tau_{xy}^2} \quad (8$$

$$\text{and, } \sigma_2 = C - R$$

$$\text{or, } \sigma_2 = \frac{\sigma_x + \sigma_y}{2} - \sqrt{\left(\frac{\sigma_x - \sigma_y}{2}\right)^2 + \tau_{xy}^2} \quad (8$$

Maximum shearing stress, $\tau_{max} = \pm R$

$$\text{or, } \tau_{max} = \pm\sqrt{\left(\frac{\sigma_x - \sigma_y}{2}\right)^2 + \tau_{xy}^2} \quad (8$$

Question 8.5: Discuss how to find maximum absolute shearing stress.

Answer:

Figure 8.6a shows a differential volume stress element at a point containing the princ stresses. Bi-axial stresses about x-, y- and z-axes are shown in Figures 8.6b, 8.6c 8.6d respectively. The corresponding Mohr's circles are presented in Figures 8.6e, and 8.6g respectively. Three Mohr's circles are then shown in the same Figure 8.6h. principal stresses are so assumed that $\sigma_1 > \sigma_2 > 0$.

The radii R in Mohr's circles of the stress elements as shown in Figures 8.6b, 8.6c 8.6d are shown in Figures 8.6e, 8.6f and 8.6g respectively and their absolute values respectively obtained from the following equations,

$$R = \frac{|\sigma_2|}{2}, \quad R = \frac{|\sigma_1|}{2} \text{ and } R = \frac{|\sigma_1 - \sigma_2|}{2} \quad (8.$$

The absolute maximum shearing stress is the radius of the largest Mohr's circle and t is represented by Figure 8.6f and it is therefore, $R = \frac{|\sigma_1|}{2}$ as given in Equation (8.

Since the negative sign does not carry any meaning for the shearing stress while it is us in design, it has been avoided and the absolute value has been considered.

For both σ_1 and σ_2 either positive (tensile stress) or negative (compressive stress), t absolute maximum shearing stress is either $|\sigma_1|/2$ or $|\sigma_2|/2$, whichever is larger. On t other hand, if one principal stress is positive (tensile stress) and the other principal str is negative (compressive stress), then the absolute maximum shearing stress is equal $|\sigma_1 - \sigma_2|/2$.

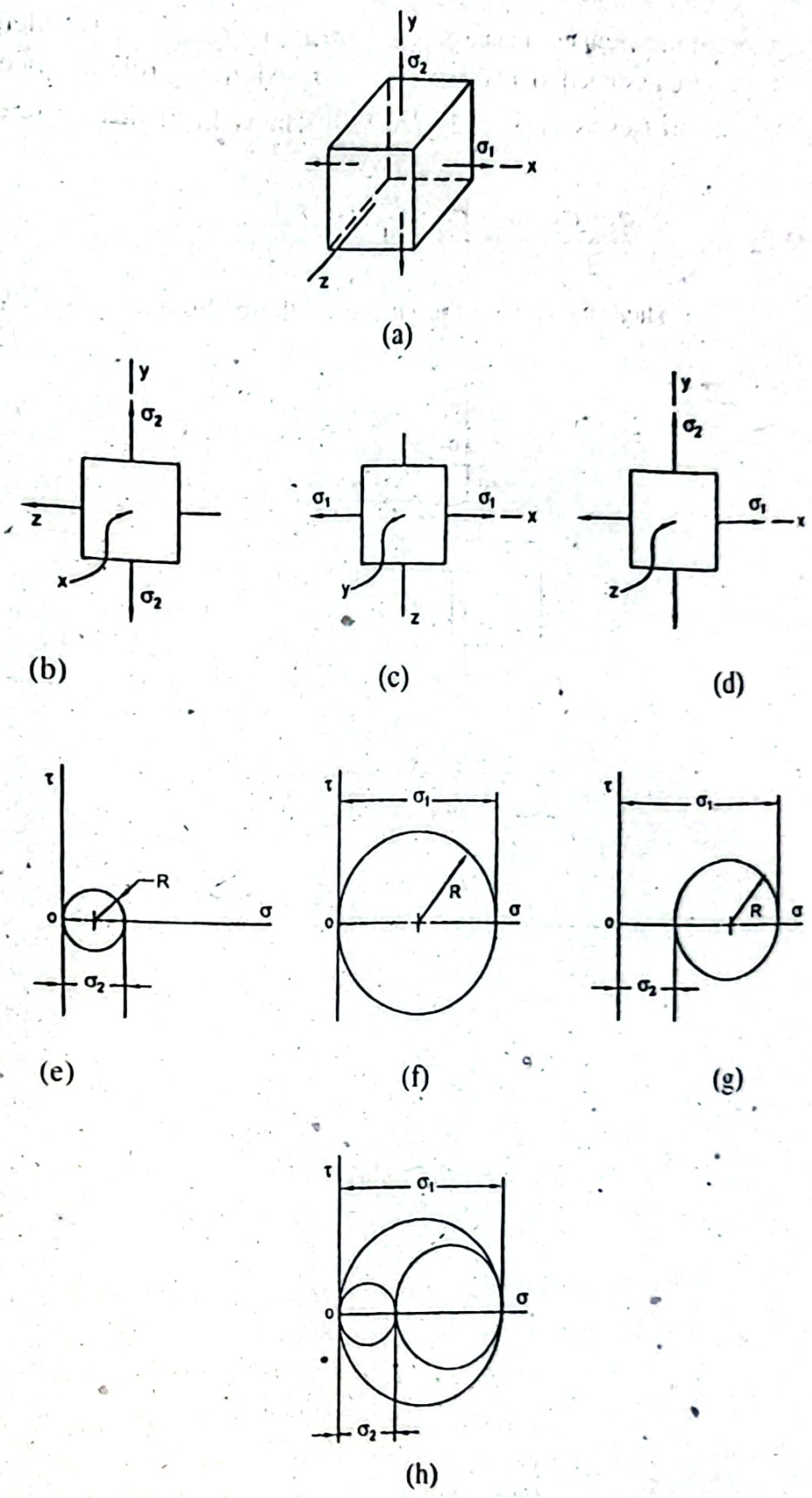

Figure 8.6: (a) A Differential Volume Element (b) A Bi-axial Stress about *x*-Axis
(c) A Bi-axial Stress about *y*-Axis (d) A Bi-axial Stress about *z*-Axis
(e) Mohr's Circle about *x*-Axis (f) Mohr's Circle about *y*-Axis
(g) Mohr's Circle about *z*-Axis
(h) Mohr's Circle with all Principal Stresses.

Now a differential volume element (Figure 8.7a) for tri-axial stresses is considered. the principal stresses are assumed to follow $\sigma_1 > \sigma_2 > \sigma_3$. Mohr's circle has been dr with all the principal stresses as shown in Figure 8.7b. The radii of three circles ar follows.

$$\frac{|\sigma_1 - \sigma_2|}{2}, \frac{|\sigma_2 - \sigma_3|}{2} \text{ and } \frac{|\sigma_3 - \sigma_1|}{2} \quad (8$$

The absolute maximum shearing stress is the largest of these three values in Equa (8.19).

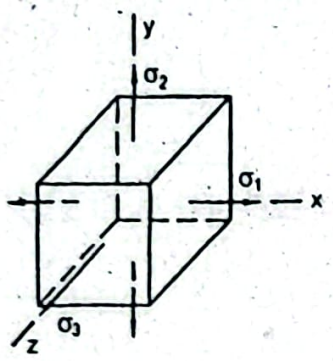

(a)

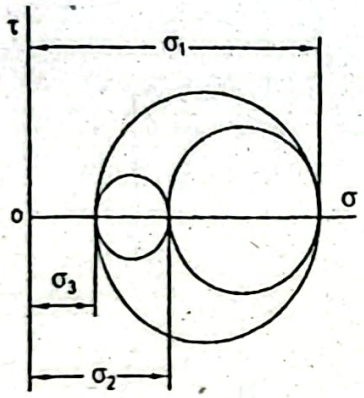

(b)

Figure 8.7: (a) A Differential Volume Element for Tri-axial Stresses
(b) Mohr's Circle with all Principal Stresses.

Question 8.6: Deduce expressions of total strains and stresses for a member when undergoes bi-axial tensile stresses.

Answer:

A member as shown in Figure 8.8a is subjected to uniform tensile stress σ, along the axis. Due to this tensile stress the member elongates along the *x*-axis and shortens alor the *y*-axis, that is, lateral direction. The shape of the member after deformation is show by the dotted line in the same figure. Another member is shown in Figure 8.8b, which subjected to uniform tensile stress along the *y*-axis. Due to this tensile stress the memb elongates along the *y*-axis and shortens along the *x*-axis. The shape of member afte deformation is shown in the same figure by dotted line.

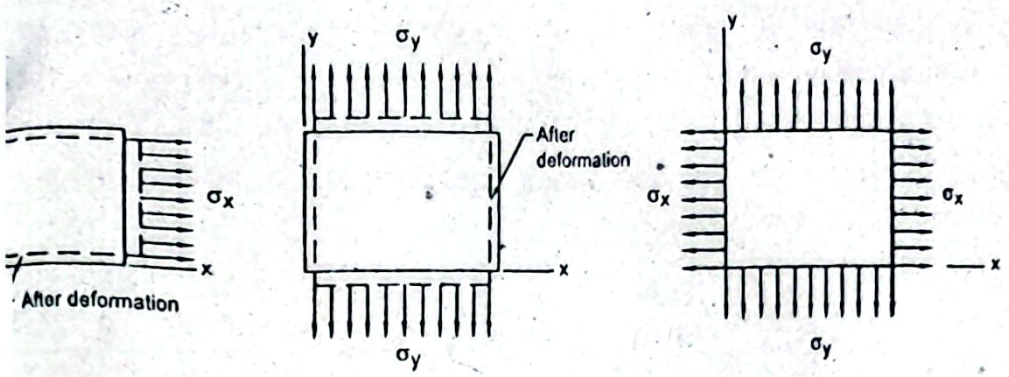

(a) (b) (c)

Figure 8.8: Members Subjected to Tensile Stresses.

o is defined as,

$$\nu = \frac{-lateral\ strain}{axial\ strain} = -\frac{\varepsilon_y}{\varepsilon_x} \tag{8.20}$$

ial strain

ong *x*-direction

of elasticity

ng the value of ε_x in Equation (8.20), lateral strain ε_y in the *y*-direction is

$$\varepsilon_y = -\nu\frac{\sigma_x}{E} \tag{8.21}$$

curs in the *y*-direction (lateral direction) for applying the tensile stress σ_x on. Similarly, from Figure 8.8b for applying the tensile stress σ_y in the *y*-al strain ε_x in the *x*-direction is found as,

$$\varepsilon_x = -\nu\frac{\sigma_y}{E} \tag{8.22}$$

a member is shown with tensile stresses in both the *x*- and *y*-directions. *total strain* along the *x*-direction and the *y*-direction for this member will

$$\varepsilon_x = \frac{\sigma_x}{E} - \nu\frac{\sigma_y}{E} \tag{8.23}$$

$$\text{and, } \varepsilon_y = \frac{\sigma_y}{E} - \nu\frac{\sigma_x}{E} \tag{8.24}$$

The first term of right hand side of Equation (8.23) is developed for the tensile stress σ_x along the x-direction and the second term is the lateral strain along the x-direction, which is contributed by the tensile stress σ_y in the y-direction. Similarly, the right hand side terms of Equation (8.24) can be explained. From Equations (8.23) and (8.24) the expressions of σ_x and σ_y are found as,

$$\sigma_x = \frac{E}{1-\nu^2}\left(\varepsilon_x + \nu\varepsilon_y\right) \tag{8.25}$$

$$\sigma_y = \frac{E}{1-\nu^2}\left(\varepsilon_y + \nu\varepsilon_x\right) \tag{8.26}$$

Question 8.7: Obtain a relation of modulus of elasticity, modulus of rigidity and Poisson's ratio.

Answer:

For a pure torsional load on a circular member, stress at a point on the surface of the member can be represented by the maximum shearing stresses as shown in Figure 8.9a. Mohr's circle of this stress element with the principal stresses and maximum shearing stress is shown in Figure 8.9b. From this figure it is seen that the magnitudes of τ_{max}, σ_1 and σ_2 are equal to each other. At an angle of 45^0 from the planes of the maximum shearing stresses, the planes of zero shearing stresses containing principal stresses are seen in Figure 8.9c.

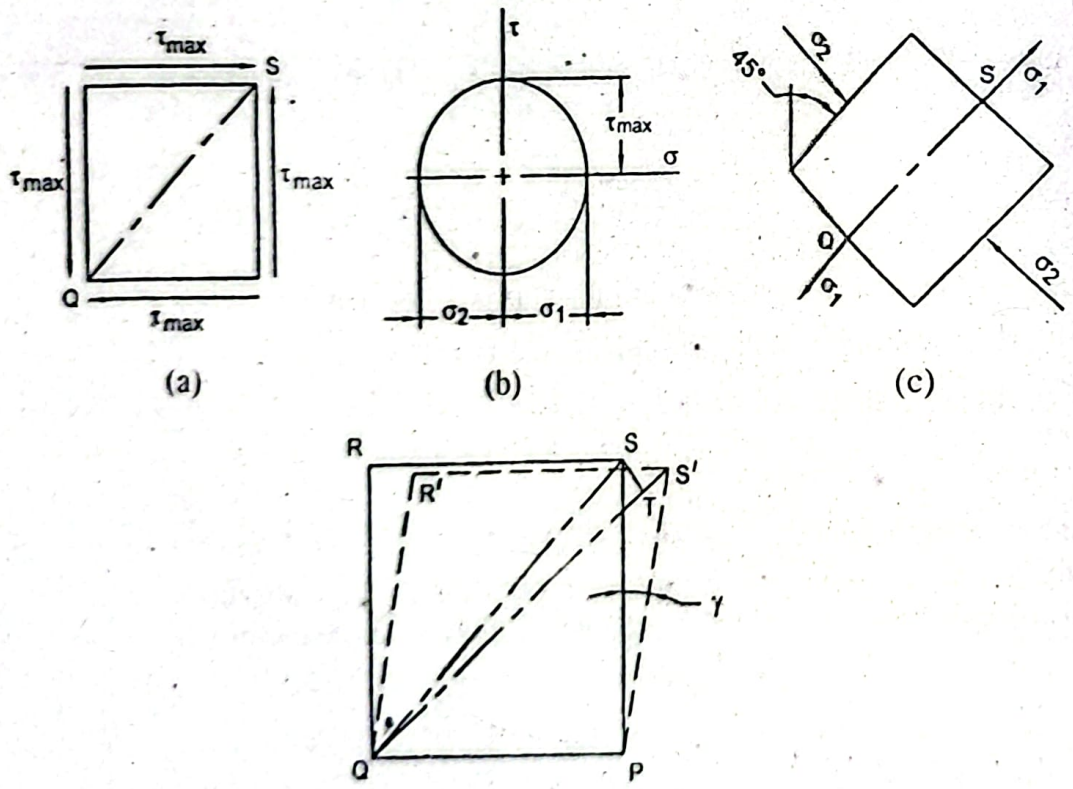

Figure 8.9: (a) A Stress Element under pure torsion (b) Mohr's Circle Showing Principal Stresses and Maximum Shearing Stress (c) A Stress Element Showing Principal Stresses (d) Stress Element in Deformation.

In Figure 8.9c the principal stresses σ_1 and σ_2 are respectively tensile and compressive stresses. The element under shearing stress yields deformation, which is shown by dotted lines in Figure 8.9d. In Figure 8.9d due to the shearing stress the total elongation in the diagonal direction is TS'. Since for small angle γ, QT may be considered equal to original length QS, therefore, the total strain may be written as,

$$\varepsilon = \frac{TS'}{QT} = \frac{SS' \cos 45^0}{PS/\cos 45^0} = \frac{SS'}{PS}\left(\cos 45^0\right)^2$$

But shear strain, $\gamma = \frac{\tau_{max}}{G} = \frac{SS'}{PS}$

Therefore, from the above two equations we obtain,

$$\varepsilon = \frac{\tau_{max}}{2G} \tag{8.27}$$

Now in Equation (8.23), writing $\sigma_x = \sigma_1 = \tau_{max}$ and $\sigma_y = -\sigma_2 = -\tau_{max}$, we find,

$$\varepsilon_x = \frac{\tau_{max}}{E} + \nu\frac{\tau_{max}}{E} \tag{8.28}$$

According to the condition the strain obtained by Equations (8.27) and (8.28) are equal, as a result equating them and rearranging, one finds the relation,

$$G = \frac{E}{2(1+\nu)} \tag{8.29}$$

SOLVED PROBLEMS

Problem P8.1:

Find the principal stresses and the maximum shearing stresses of a stress element as shown in Figure P8.1. Also determine the angles at which they occur. Solve the problem analytically. Show the results on the differential elements. Also present the results graphically.

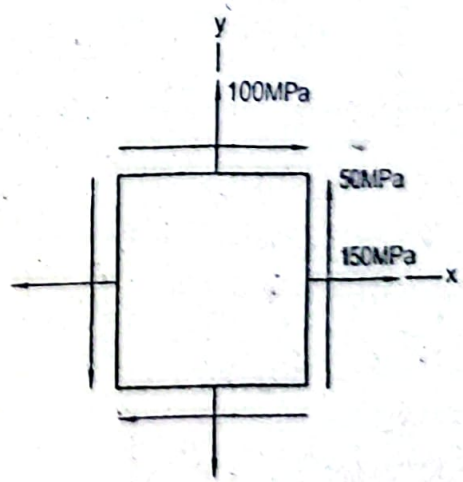

Figure P8.1

Given Data:

Normal stress in x-direction, $\sigma_x = 150MPa$

Normal stress in y-direction, $\sigma_y = 100MPa$

Shearing stress, $\tau_{xy} = 50MPa$

To Find:

Principal stresses, σ_1 and σ_2

Maximum shearing stress, τ_{max}

Angles at which principal stresses occur, θ

Angles at which maximum shearing stresses occur, θ_s

Solution:

Principal stresses, $$\sigma_1, \sigma_2 = \frac{\sigma_x + \sigma_y}{2} \pm \sqrt{\left(\frac{\sigma_x - \sigma_y}{2}\right)^2 + \tau_{xy}^2}$$

$$= \frac{150+100}{2} \pm \sqrt{\left(\frac{150-100}{2}\right)^2 + 50^2}$$

$$= 125 \pm 55.90$$

$$\sigma_1 = 180.90MPa \text{ Answer}$$

$$\sigma_2 = 69.10MPa \text{ Answer}$$

Maximum shearing stress, $$\tau_{max} = \pm\sqrt{\left(\frac{\sigma_x - \sigma_y}{2}\right)^2 + \tau_{xy}^2}$$

$$= \pm\sqrt{\left(\frac{150-100}{2}\right)^2 + 50^2}$$

$$= \pm 55.90MPa \text{ Answer}$$

Angles at which the principal stresses occur can be obtained as follows. The angles a considered with respect to the x-axis and positive in clockwise direction.

We have, $$\tan 2\theta = \frac{2\tau_{xy}}{\sigma_x - \sigma_y}$$

$$\text{or, } 2\theta = \tan^{-1}\left[\frac{2\times(-50)}{150-100}\right]$$

$$\text{or, } 2\theta = -63.44^0, 116.56^0$$

That is, $$\theta = -31.72^0, 58.28^0$$

Angles at which the maximum shearing stress occur,

$$\tan 2\theta_s = -\frac{\sigma_x - \sigma_y}{2\tau_{xy}}$$

$$\text{or, } 2\theta_s = \tan^{-1}\left[-\left(\frac{\sigma_x - \sigma_y}{2\tau_{xy}}\right)\right]$$

$$\text{or, } 2\theta_s = \tan^{-1}\left[-\frac{150-100}{2\times(-50)}\right]$$

$$\text{or, } 2\theta_s = 26.57^0, 206.57^0$$

$$\text{or, } \theta_s = 13.29^0, 103.28^0 \quad \textit{Answer}$$

results are shown below on the differential elements.

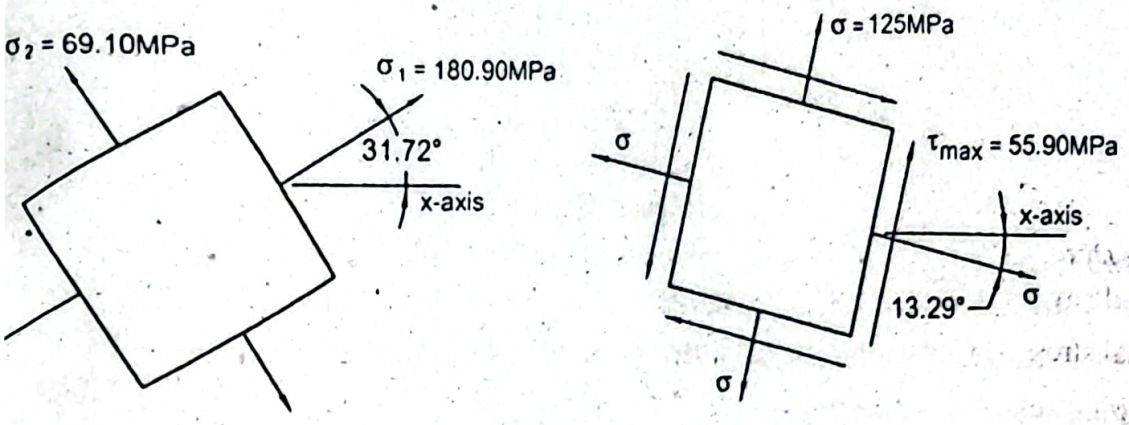

results are presented below on Mohr's circle.

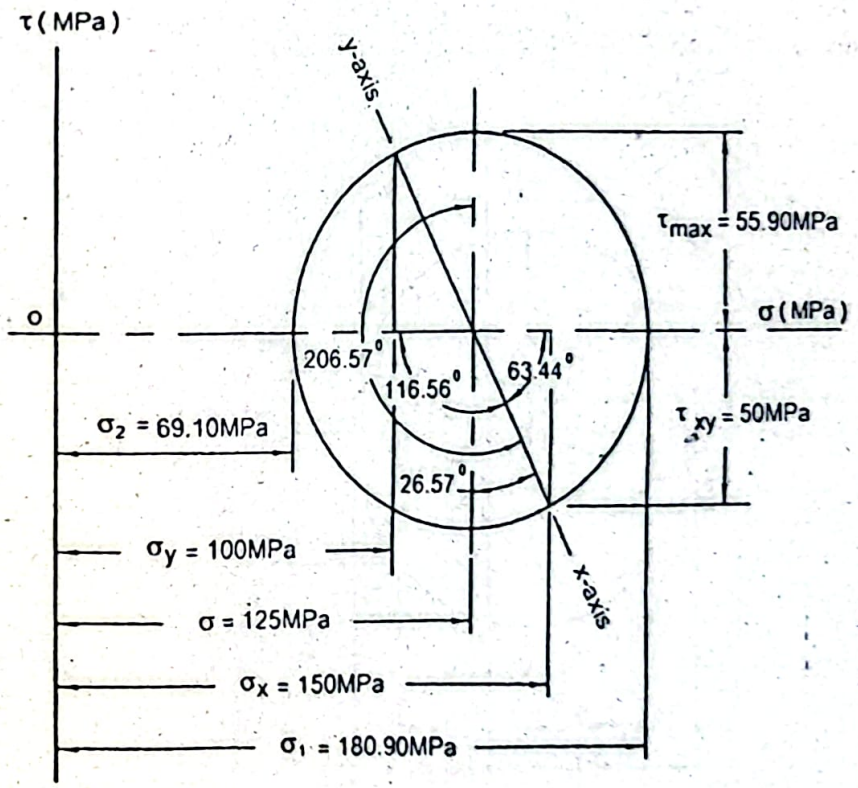

oblem P8.2:

n element is subjected to the state of stress as shown in Figure P8.2. Find the principal resses and the stress components on a plane at 30^0 in the anticlockwise direction from e x-axis.

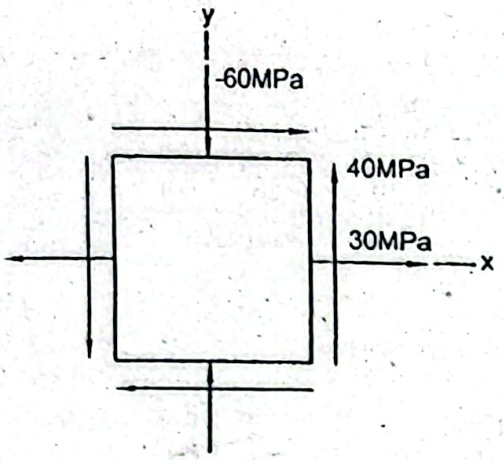

Figure P8.2

Given Data:

Normal stress in x-direction, $\sigma_x = 30MPa$

Normal stress in y-direction, $\sigma_y = -60MPa$

Shearing stress, $\tau_{xy} = 40MPa$

To Find:

- Principal stresses, σ_1 and σ_2
- Stress components at an angle of 30^0 with x-axis, σ and τ

Solution:

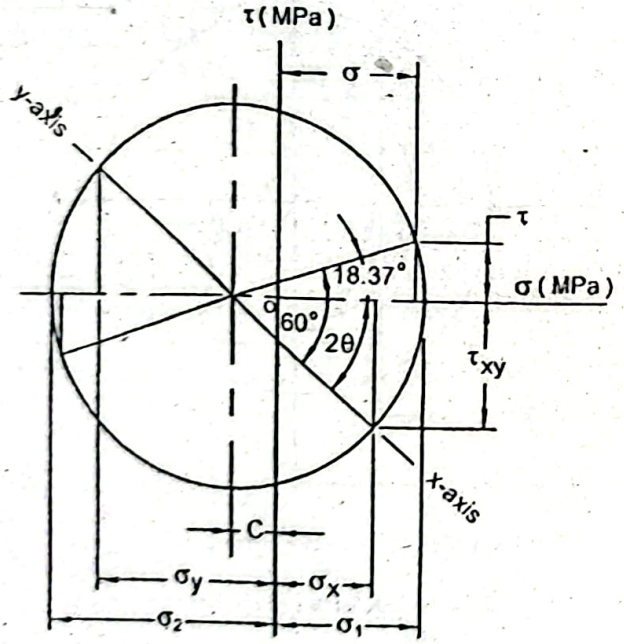

Distance between the τ-axis and the center of Mohr's circle,

$$C = \frac{\sigma_x + \sigma_y}{2} = \frac{30 - 60}{2} MPa = -15MPa$$

Radius of Mohr's circle, $$R = \sqrt{\left(\frac{\sigma_x - \sigma_y}{2}\right)^2 + \tau_{xy}^2}$$

$$= \sqrt{\left(\frac{30+60}{2}\right)^2 + (40)^2}$$

$$= 60.21MPa$$

incipal stresses, $\sigma_1 = C + R = (-15 + 60.21)MPa = 45.21MPa$ **Answer**

$\sigma_2 = C - R = (-15 - 60.21)MPa = -75.21MPa$ **Answer**

igle between the x-axis and the principal axis in Mohr's circle,

$$\tan 2\theta = \frac{2\tau_{xy}}{\sigma_x - \sigma_y}$$

$$\text{or, } \tan 2\theta = \frac{2\times(-40)}{30+60}$$

$$\text{or, } 2\theta = -41.63^0$$

w the stress components at 30^0 in the anticlockwise direction with the x-axis, that is, 0^0 in Mohr's circle will be obtained.

gle between the principal axis and the plane at which the components needed is $^0 - 41.63^0) = 18.37^0$.

required normal stress, $\sigma = C + R\cos 18.37^0$

$= 15 + 60.21\cos 18.37^0$

$= 43.10MPa$ **Answer**

the required shearing stress, $\tau = R\cos 18.37^0$

$= 60.21\sin 18.37^0$

$= 18.98MPa$ **Answer**

blem P8.3:

rmine the principal stresses and the maximum shearing stresses for a stress element nown in Figure P8.3. Also determine the angles at which they occur. Show the ses on the differential elements. Solve the problem analytically and present them nically.

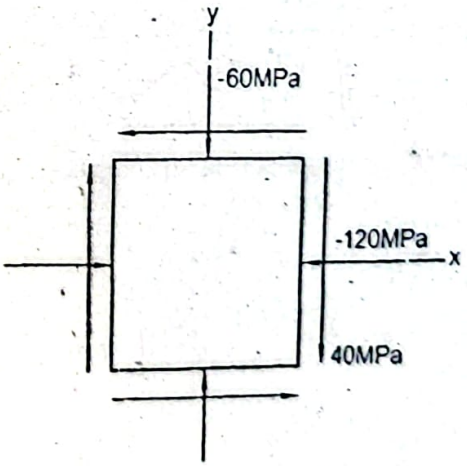

Figure P8.3

Data:

al stress, $\sigma_x = -120MPa$

Normal stress, $\sigma_y = -60MPa$

Shearing stress, $\tau_{xy} = 40MPa$

To Find:

- Principal stresses, σ_1 and σ_2
- Maximum shearing stress, τ_{xy}
- Angles at which principal stresses occur, θ
- Angles at which maximum shearing stresses occur, θ_s

Solution:

Principal stresses, $$\sigma_1, \sigma_2 = \frac{\sigma_x + \sigma_y}{2} \pm \sqrt{\left(\frac{\sigma_x - \sigma_y}{2}\right)^2 + \tau_{xy}^2}$$

$$= \frac{-120 - 60}{2} \pm \sqrt{\left(\frac{-120 + 60}{2}\right)^2 + 40^2}$$

$$= -90 \pm 50$$

Therefore, $\sigma_1 = -40MPa$ *Answer*

and, $\sigma_2 = -140MPa$ *Answer*

Angles of plane at which the principal stresses occur,

$$\tan 2\theta = \tan \frac{2\tau_{xy}}{\sigma_x - \sigma_y}$$

$$\text{or, } 2\theta = \tan^{-1}\left[\frac{2 \times 40}{-120 + 60}\right] = \tan^{-1}[1.333]$$

$$\text{or, } 2\theta = -53.13^0, 126.87^0$$

That is, $\theta = -26.57^0, 63.44^0$ *Answer*

Maximum shearing stress, $$\tau_{max} = \pm\sqrt{\left(\frac{\sigma_x - \sigma_y}{2}\right)^2 + \tau_{xy}^2}$$

$$= \pm\sqrt{\left(\frac{-120 + 60}{2}\right)^2 + 40^2} = \pm 50MPa$$ *Answer*

Angles of planes at which the maximum shearing stresses occur,

$$\tan 2\theta_s = -\frac{\sigma_x - \sigma_y}{2\tau_{xy}}$$

$$\text{or, } 2\theta_s = \tan^{-1}\left[-\frac{(-120 + 60)}{2 \times 40}\right] = \tan^{-1}[-0.75]$$

$$\text{or, } 2\theta_s = 36.87^0, 216.87^0$$

That is, $\theta_s = 18.44^0, 108,44^0$ *Answer*

The stresses are shown below on the differential elements.

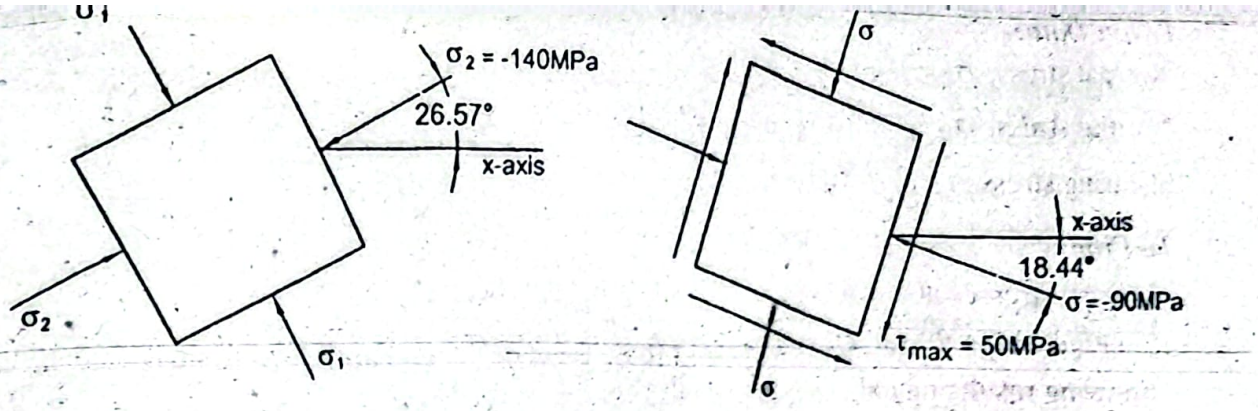

The results are presented below on Mohr's circle.

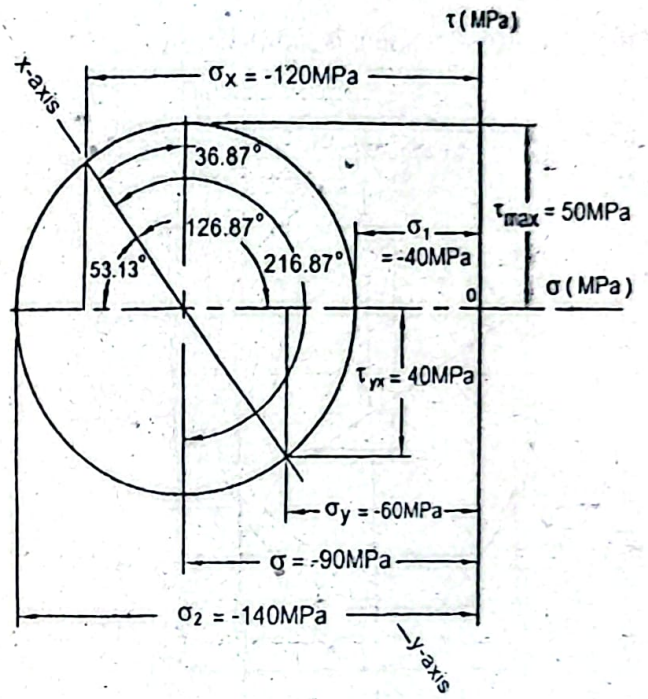

Problem P8.4:

For the stress element as shown in Figure P8.4, determine the normal and shearing stresses on the planes whose normals are at 30^0 (counter clockwise) and 120^0 (counter clockwise) with the x-axis. Show the results on a differential element.

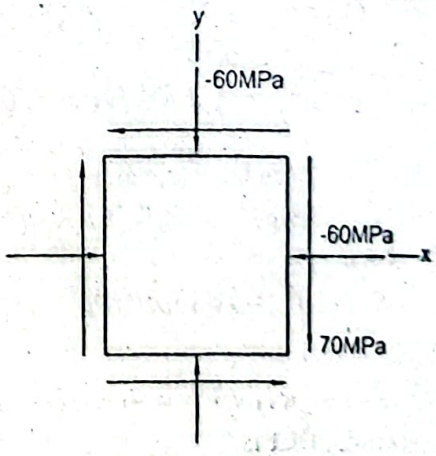

Figure P8.4

Given Data:

Normal stress, $\sigma_x = -60MPa$

Normal stress, $\sigma_y = -60MPa$

Shearing stress, $\tau_{xy} = 70MPa$

To Find:

- Normal stresses at planes whose normals are at 30^0 (ccw) and 120^0 (ccw)
- Shearing stress on these planes, τ
- Showing results on differential element

Solution:

Mohr's circle of the given stress element is shown below.

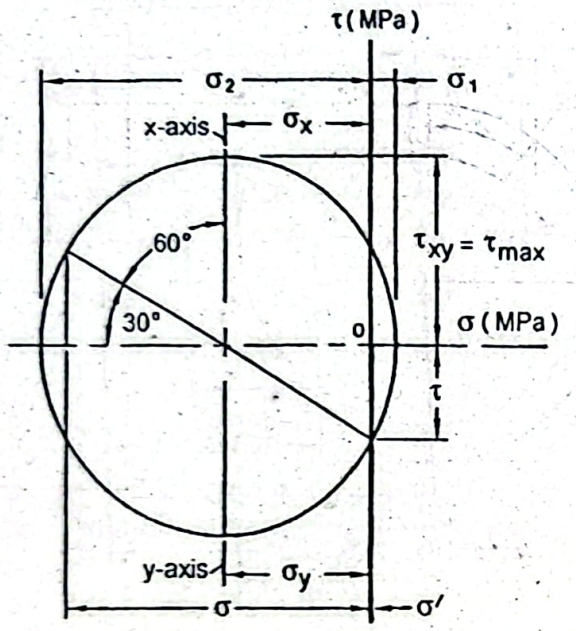

Distance between the center of Mohr's circle and the τ-axis,

$$C = \frac{\sigma_x + \sigma_y}{2} = \frac{-60-60}{2} MPa = -60MPa$$

Radius of Mohr's circle, $R = \sqrt{\left(\frac{\sigma_x - \sigma_y}{2}\right)^2 + \tau_{xy}^2}$

$$= \sqrt{\left(\frac{-60+60}{2}\right)^2 + 70^2}\ MPa = 70MPa$$

Normal stress at an angle of 30^0 (ccw) can be obtained as,

$$\sigma = C + R\cos 30^0 = -60 - 70\cos 30^0 = -120.62MPa$$

Shearing stress at this plane is given by,

$$\tau = R\sin 30^0 = 70\sin 30^0\ MPa = 35MPa$$

Normal stress at an angle of 120^0 (ccw),

$$\sigma' = -C + R\cos 30^0 = -60 + 70\cos 30^0 = 0.62MPa$$

Shearing stress on this plane is same, that is,

$$\tau = 35MPa$$

The results are shown below on a differential element.

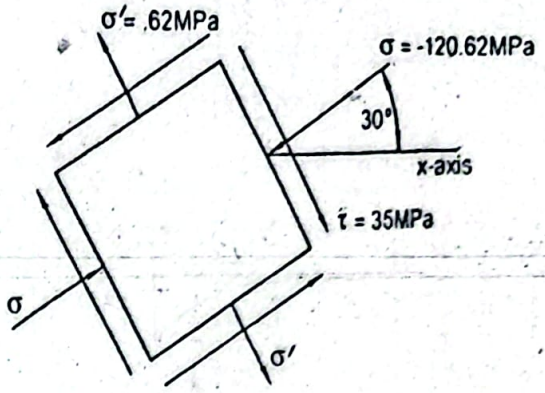

Problem P8.5:
Find the principal stresses and the maximum in-plane shearing stress for the stress element as shown in Figure P8.5. Show the results on the differential elements.

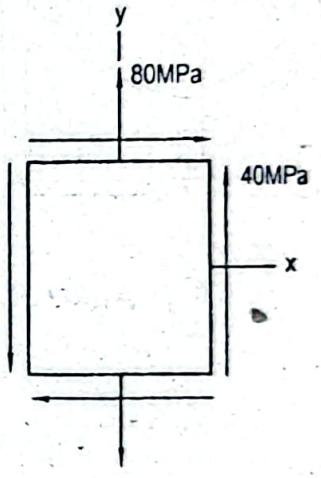

Figure P8.5

Given Data:
Normal stress, $\sigma_y = 80MPa$
Shearing stress, $\tau_{xy} = 40MPa$

To Find:
- Principal stresses, σ_1 and σ_2
- Maximum in-plane shearing stress, τ_{max}
- Showing results on differential elements

Solution:
Mohr's circle for the given stress element is shown below.
Distance between the $\tau-axis$ and the center of Mohr's circle,

$$C = \frac{\sigma_y}{2} = \frac{80}{2} MPa = 40MPa$$

Radius of Mohr's circle, $R = \sqrt{\left(\frac{\sigma_y}{2}\right)^2 + \tau_{xy}^2}$

$$= \sqrt{\left(\frac{80}{2}\right)^2 + 40^2}\ MPa$$

$$= 56.52MPa$$

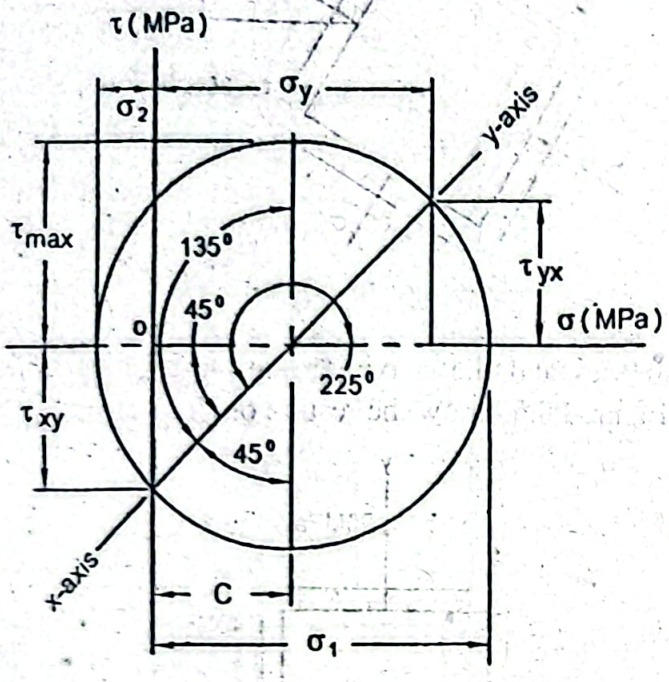

Therefore, the principal stresses are,

$$\sigma_1 = C + R = (40 + 56.57)MPa = 96.57MPa \quad \textbf{Answer}$$

$$\sigma_2 = C - R = (40 - 56.57)MPa = -16.57MPa \quad \textbf{Answer}$$

Angles, $2\theta = tan^{-1}\frac{-\tau_{xy}}{-\sigma_y/2} = tan^{-1}\frac{-40}{-80/2} = 45^0, 225^0$

That is, $\theta = 22.5^0, 112.5^0$

Maximum in-plane shearing stress,

$$\tau_{max} = \frac{|\sigma_1 - \sigma_2|}{2} = R$$

or, $\tau_{max} = 56.57MPa$ **Answer**

Angle at which τ_{max} occurs, $tan 2\theta_s = -\frac{-\sigma_y}{-2\tau_{xy}}$

or, $tan 2\theta_s = \frac{-80}{2\times 40}$

or, $2\theta_s = -45^0, 135^0$

That is, $\theta_s = -22.5^0, 67.5^0$

Normal stress on the plane of maximum shearing stress,

$$\sigma = C = 40MPa$$

A differential element showing the principal stresses,

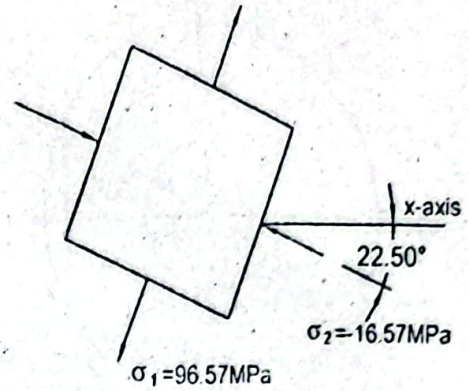

A differential element showing the maximum in-plane shearing stress,

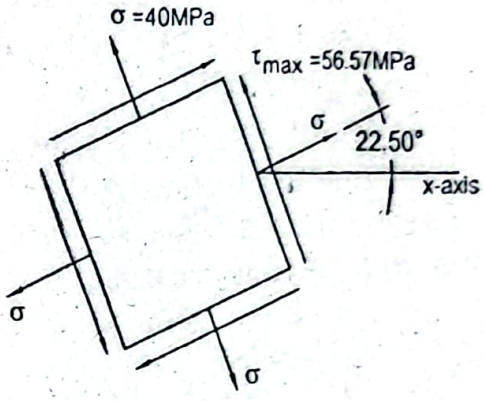

Problem P8.6:

For the state of pure shearing stress as shown in Figure P8.6, determine the stress components on the planes whose normals are 30^0 (clockwise) and 120^0 (clockwise) with the x-axis. Show your results on a differential element.

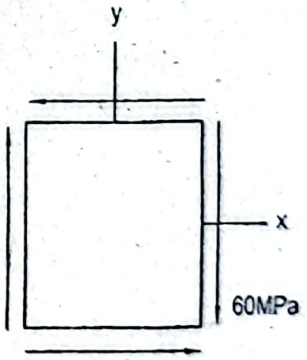

Figure P8.6

Given Data:

Maximum shearing stress, $\tau_{max} = 60MPa$

To Find:

- Stress components on planes whose normals are 30^0 (cw) and 120^0 (cw), σ, σ' and τ
- Showing results on differential element

Solution:

Mohr's circle for pure shearing stress $\tau_{max} = 60MPa$ including stress components at an angle of 30^0 (cw) and 120^0 (cw) with the x-axis is shown below.

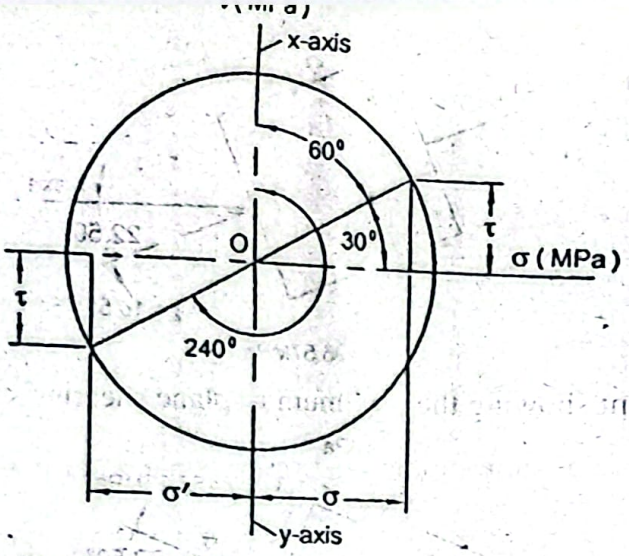

Radius of Mohr's circle, $R = \tau_{max} = 60MPa$

Normal stress, $\sigma = R\cos 30^0 = 60\cos 30^0 = 51.96MPa$ ***Answer***

Normal stress, $\sigma' = -R\cos 30^0 = -60\cos 30^0 = -51.96MPa$ ***Answer***

Shearing stress, $\tau = \pm R\sin 30^0 = \pm 60\sin 30^0 = \pm 30MPa$ ***Answer***

The results are shown below on a differential element.

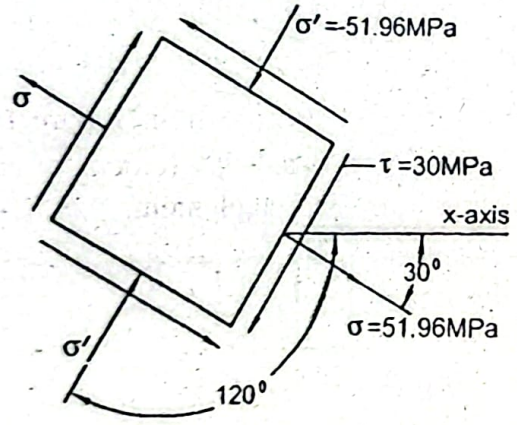

Problem P8.7:

A stress element is shown in Figure P8.7. If the principal stresses for this element a $20MPa$ and $-80MPa$, determine σ_x and σ_y.

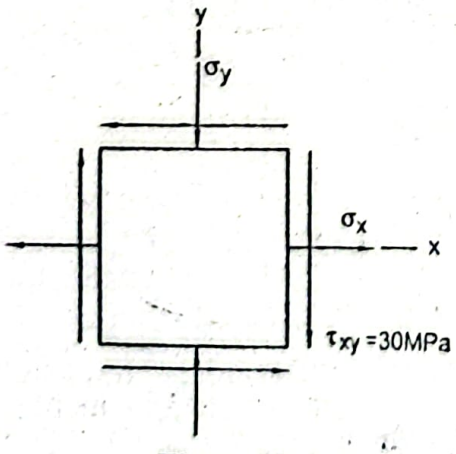

Figure P8.7

Given Data:

Shearing stress, $\tau_{xy} = 30MPa$

Principal stress, $\sigma_1 = 20MPa$

Principal stress, $\sigma_2 = -80MPa$

To Find:

- Normal stresses, σ_x and σ_y

Solution:

Mohr's circle of the stress element is presented below.

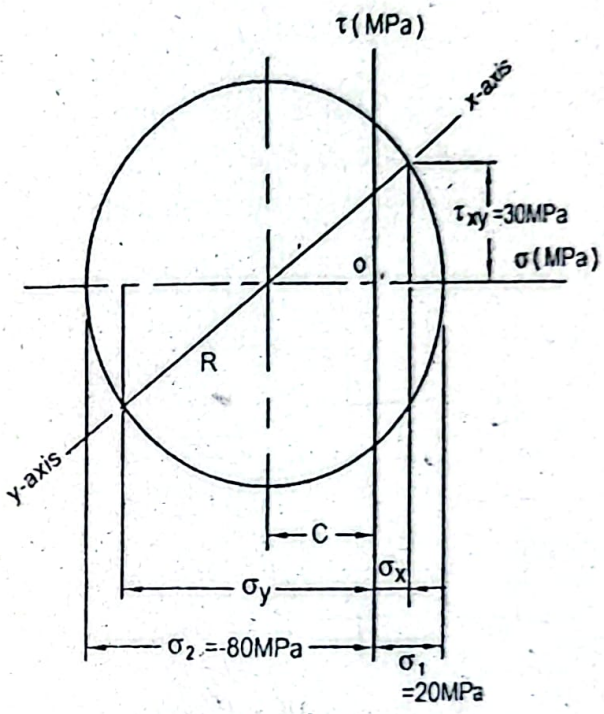

Maximum shearing stress, $\tau_{max} = \frac{|\sigma_1 - \sigma_2|}{2} = \frac{|20+80|}{2} MPa = 50MPa$

Radius of Mohr's circle, $R = \tau_{max} = 50MPa$

But we have, $$R^2 = \left(\frac{\sigma_x - \sigma_y}{2}\right)^2 + \tau_{xy}^2$$

$$\text{or, } 50^2 = \left(\frac{\sigma_x - \sigma_y}{2}\right)^2 + 30^2$$

$$\text{or, } \sigma_x - \sigma_y = 80 \qquad (i)$$

Principal stress, $\sigma_1 = C + R$

$$\text{or, } 20 = C + 50$$

$$\text{or. } C = -30$$

We also have, $$C = \frac{\sigma_x + \sigma_y}{2}$$

$$\text{or, } \sigma_x + \sigma_y = 2 \times C = 2 \times -30$$

$$\text{or, } \sigma_x + \sigma_y = -60$$

Adding Equations (i) and (ii),

$$2\sigma_x = 20$$

$$\text{or, } \sigma_x = 10MPa \textbf{ Answer}$$

Substituting this value in Equation (ii),

$$10 + \sigma_y = -60$$

$$\text{or, } \sigma_y = -70MPa \textbf{ Answer}$$

Problem P8.8:

Find the stress components on a plane at the angles of 22.5^0 (counter clockwise) 112.5^0 (counter clockwise) with the x-axis for the stress element showing prin stresses in Figure P8.8. Present the results on a differential element.

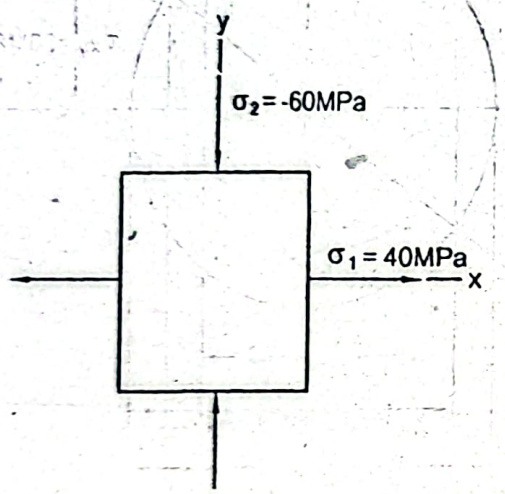

Figure P8.8

Given Data:

Principal stress, $\sigma_1 = 40MPa$

Principal stress, $\sigma_2 = -60MPa$

To Find:

- Normal and shearing stresses, σ and τ at angles $22.5^0\,(ccw)$ and $112.5^0\,(ccw)$

- Showing results on differential element

Solution:

Mohr's circle of the stress element is given below.

Maximum shearing stress, $\tau_{max} = \dfrac{|\sigma_1 - \sigma_2|}{2} = \dfrac{|40 + 60|}{2} MPa = 50MPa$

Radius of Mohr's circle, $R = \tau_{max} = 50MPa$

Shearing stress, $\tau = R\sin 45^0 = 50 \times \sin 45^0 = 35.36MPa$ **Answer**

Principal stress, $\sigma_1 = C + R$

$$\text{or, } C = \sigma_1 - R$$

$$= (40 - 50)MPa = -10MPa$$

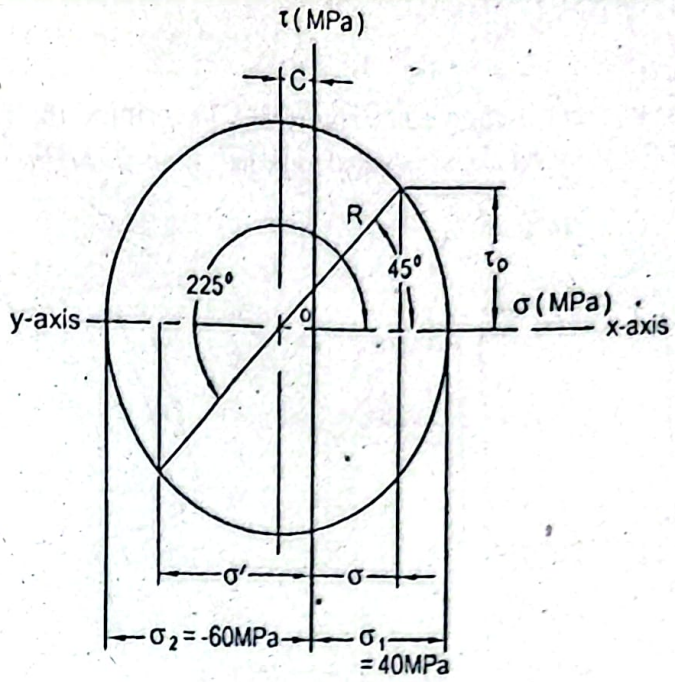

We have, $$R^2 = \left(\frac{\sigma - \sigma'}{2}\right)^2 + \tau^2$$

or, $$50^2 = \left(\frac{\sigma - \sigma'}{2}\right)^2 + (35.36)^2$$

or, $$\sigma - \sigma' = 70.70 \qquad (i)$$

Again, $$C = \frac{\sigma + \sigma'}{2}$$

or, $$\sigma + \sigma' = 2\times -10 = -20 \qquad (ii)$$

Adding Equations *(i)* and *(ii)*,

$$2\sigma = 50.7$$

or, $$\sigma = 25.35MPa \text{ Answer}$$

Substituting in Equation *(ii)*,

$$25.35 + \sigma' = -20$$

or, $$\sigma' = -40.35MPa \text{ Answer}$$

The results are presented on a differential element as shown below.

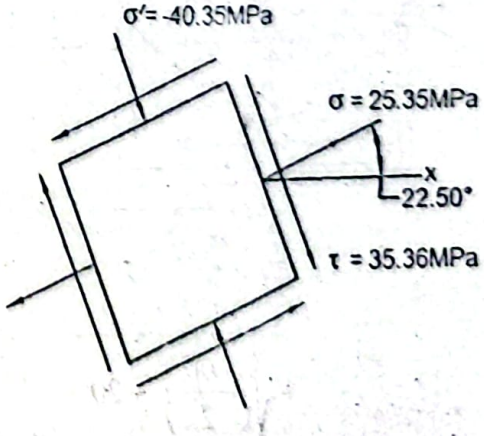

Problem P8.9:

A plane stress element is shown in Figure P8.9. Determine the range of θ for which the magnitude of the shearing stress is equal to or less than $25MPa$.

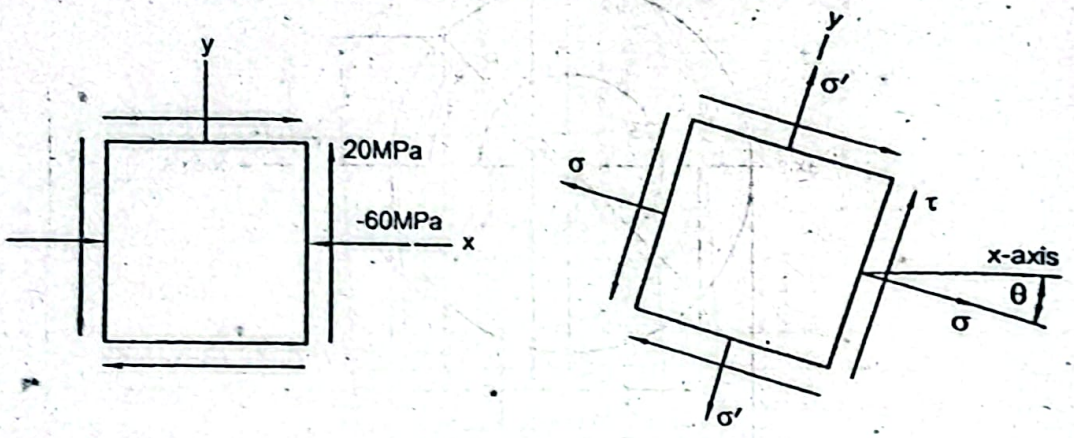

Figure P8.9

Given Data:

Normal stress, $\sigma_x = -60MPa$

Shearing stress, $\tau_{xy} = 20MPa$

Shearing stress, $\tau = 25MPa$

To Find:

- Range of angle, θ

Solution:

Mohr's circle for the given stress element is shown below.

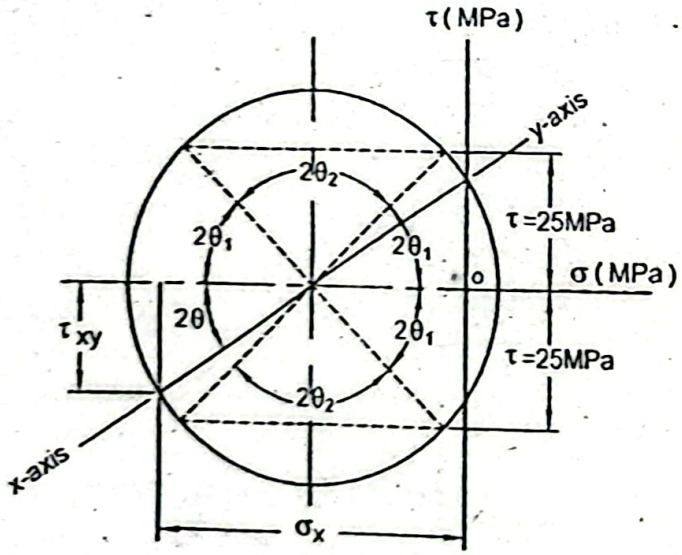

Maximum shearing stress, $\tau_{max} = \sqrt{\left(\frac{\sigma_x}{2}\right)^2 + \tau_{xy}^2}$

$$= \sqrt{\left(\frac{-60}{2}\right)^2 + 20^2}$$

$$= 36.06MPa$$

Therefore, radius of Mohr's circle, $R = \tau_{max} = 36.06 MPa$

Again shearing stress, $\tau = R \sin 2\theta_1$

or, $25 = 36.06 \sin 2\theta_1$

or, $2\theta_1 = 43.89^0$

Angle, $\tan 2\theta = \dfrac{2\tau_{xy}}{\sigma_x - \sigma_y}$

or, $2\theta = \tan^{-1}\left[\dfrac{2\times -20}{-60}\right] = \tan^{-1}[0.667]$

or, $2\theta = 33.69^0$

Angle, $2\theta_2 = (90^0 - 2\theta_1)\times 2 = (90^0 - 43.89^0)\times 2 = 92.22^0$

Therefore, the required range of θ with respect to the x-axis for which $\tau \le 25MPa$ is

$$\text{from } \frac{(2\theta + 2\theta_1)}{2} = \frac{33.69^0 + 43.89^0}{2} = 38.79^0$$

$$\text{to } \frac{2\theta + 2\theta_1 + 2\theta_2}{2} = \frac{33.69^0 + 43.89^0 + 92.22^0}{2} = 84.9^0$$

That is, from 38.79^0 to 84.9^0 *Answer*

and from

$$\frac{(2\theta + 2\theta_1 + 2\theta_2 + 2\times 2\theta_1)}{2} = \frac{33.69^0 + 43.89^0 + 92.22^0 + 2\times 43.89^0}{2} = 128.79^0$$

$$\text{to } \frac{2\theta + 2\theta_1 + 2\theta_2 + 2\times 2\theta_1 + 2\theta_2}{2} = \frac{33.69^0 + 43.89^0 + 92.22^0 + 2\times 43.89^0 + 92.22^0}{2} = 174.9^0$$

That is, from 128.79^0 to 174.9^0 *Answer*

Problem P8.10:

A plane stress element is shown in Figure P8.10. Determine the range of θ for which the magnitude of the normal stress is equal to or less than $90MPa$.

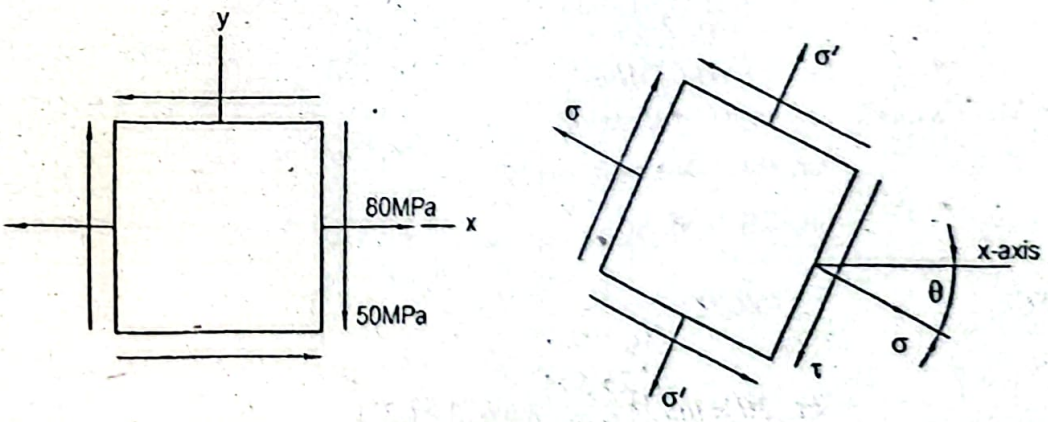

Figure P8.10

Given Data:

Normal stress, $\sigma_x = 80MPa$

Normal stress, $\sigma_y = 0MPa$

Shearing stress, $\tau_{xy} = 50MPa$

Normal stress, σ'

To Find:

- Range of angle, θ for $\sigma \leq 90MPa$

Solution:

Mohr's circle of the given stress element is shown below.

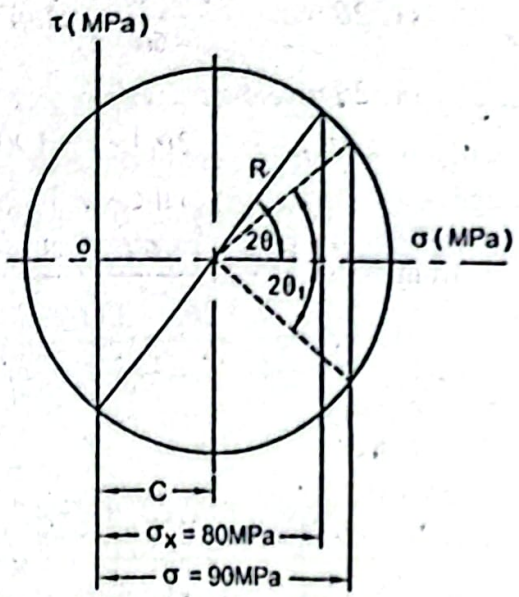

Distance between the center of Mohr's circle and the τ – axis,

$$C = \frac{\sigma_x}{2} = \frac{80}{2} MPa = 40MPa$$

Radius of Mohr's circle, $R = \sqrt{\left(\frac{\sigma_x}{2}\right)^2 + \tau_{xy}^2}$

$$= \sqrt{\left(\frac{80}{2}\right)^2 + 50^2}$$

$$= 64.03MPa$$

From Mohr's circle, $\sigma = C + R\cos 2\theta_1$

or, $90 = 40 + 64.03\cos 2\theta_1$

or, $2\theta_1 = 38.66^0$

Angle, $\tan 2\theta = \frac{2\tau_{xy}}{\sigma_x - \sigma_y}$

or, $2\theta = \tan^{-1}\left[\frac{2\times 50}{80}\right] = \tan^{-1}[1.25]$

or, $2\theta = 51.34^0$

The range of θ from the x-axis for which the magnitude of σ is less than or equal to $90MPa$ is

$$\text{from } \frac{(2\theta + 2\theta_1)}{2} = \frac{51.34^0 + 38.66^0}{2} = 45^0$$

$$\text{to } \frac{2\theta - 2\theta_1}{2} = \frac{51.34^0 - 38.66^0}{2} = 6.34^0$$

That is, from 45^0 to 6.34^0 *Answer*

Problem P8.11:

A plane stress element is shown in Figure P8.11. If the minimum principal stress is $40MPa$, determine the shearing stress τ_{xy}. Also determine the maximum principal stress and the angle at which it occurs.

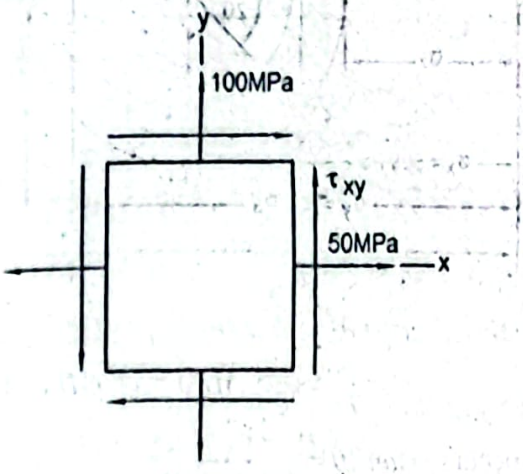

Figure P8.11

Given Data:

Normal stress, $\sigma_x = 50MPa$

Normal stress, $\sigma_y = 100MPa$

Minimum principal stress, $\sigma_2 = 40MPa$

To Find:

- Shearing stress, τ_{xy}
- Maximum principal stress, σ_1
- Angle at which σ_1 occurs, θ

Solution:

Mohr's circle of the given stress element is shown below..

Distance between the center of Mohr's circle and the τ-axis,

$$C = \frac{\sigma_x + \sigma_y}{2} = \frac{50 + 100}{2} MPa = 75MPa$$

Minimum principal stress, $\sigma_2 = C - R$

or, $40 = 75 - R$

or, $R = 35MPa$

From Mohr's circle we have, $R^2 = \left(\frac{\sigma_x - \sigma_y}{2}\right)^2 + \tau_{xy}^2$

$$\text{or, } 35^2 = \left(\frac{50-100}{2}\right)^2 + \tau_{xy}^2$$

$$\text{or, } \tau_{xy} = 24.50MPa \quad \textit{Answer}$$

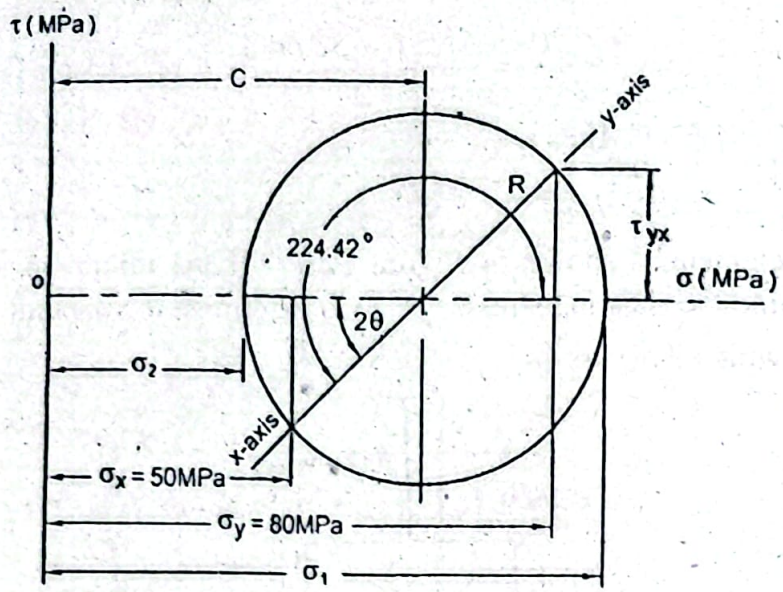

Maximum principal stress, $\sigma_1 = C + R$

$$= (75+35)MPa = 110MPa \quad \textit{Answer}$$

Angles at which σ_1 occurs, $\tan 2\theta = \dfrac{2\tau_{xy}}{\sigma_x - \sigma_y}$

$$\text{or, } 2\theta = \tan^{-1}\left[\frac{2\times(-24.50)}{50-100}\right] = \tan^{-1}[0.98]$$

$$\text{or, } 2\theta = 44.42^0, 224.42^0$$

That is, $\theta = 22.21^0, 112.21^0$

Maximum principal stress σ_1 occurs at $\theta = 112.21^0$ from the x-axis *Answer*

Problem P8.12:

For a state of plane stress as shown in Figure P8.12, find the maximum in-plane shear stress and the absolute maximum shearing stress.

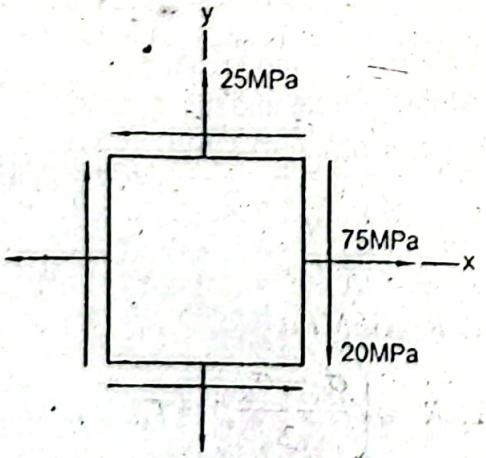

Figure P8.12

Given Data:

Normal stress along x-axis, $\sigma_x = 75MPa$

Normal stress along y-axis, $\sigma_y = 25MPa$

Shearing stress, $\tau_{xy} = 20MPa$

To Find:

Maximum in-plane shearing stress, τ_{max}

Absolute maximum shearing stress, τ_{max}

Solution:

Principal stresses, $$\sigma_1, \sigma_2 = \frac{\sigma_x + \sigma_y}{2} \pm \sqrt{\left(\frac{\sigma_x - \sigma_y}{2}\right)^2 + \tau_{xy}^2}$$

$$= \frac{75+25}{2} \pm \sqrt{\left(\frac{75-25}{2}\right)^2 + 20^2}$$

$$\sigma_1 = 82.02MPa$$

and $$\sigma_2 = 17.98MPa$$

Maximum in-plane shearing stress,

$$\tau_{max} = \pm \sqrt{\left(\frac{\sigma_x - \sigma_y}{2}\right)^2 + \tau_{xy}^2}$$

$$= \pm \sqrt{\left(\frac{75-25}{2}\right)^2 + 20^2}\, MPa = \pm 32.02MPa \quad \textit{Answer}$$

Mohr's circle for the principal stresses is given below.

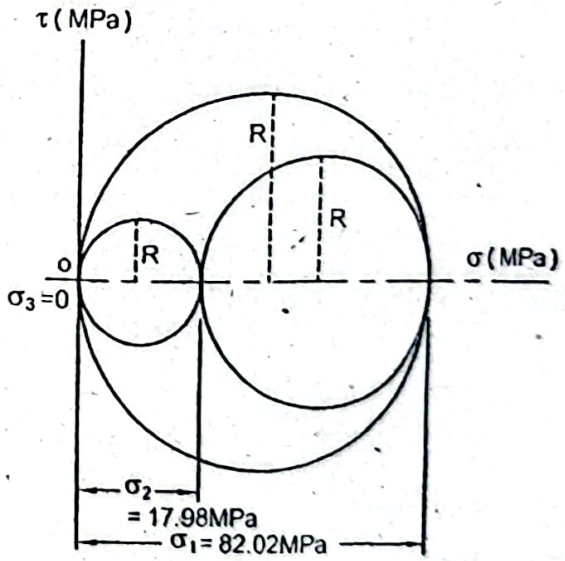

Absolute maximum shearing stress,

$$\tau_{max} = \frac{|\sigma_1 - \sigma_2|}{2} = \frac{|82.02 - 17.98|}{2} = 32.02MPa$$

$$\tau_{max} = \frac{|\sigma_1|}{2} = \frac{|82.02|}{2} = 41.01MPa$$

$$\tau_{max} = \frac{|\sigma_2|}{2} = \frac{|17.98|}{2} = 8.99MPa$$

Therefore, the required absolute maximum shearing stress,

$$\tau_{max} = 41.01MPa \quad \textit{Answer}$$

Problem P8.13:

Find the maximum in-plane shearing stress and the absolute maximum shearing stre the state of plane stress as shown in Figure P8.13.

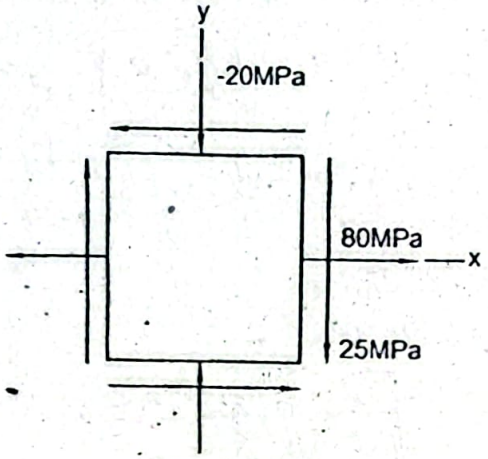

Figure P8.13

Given Data:

Normal stress along x-axis, $\sigma_x = 80MPa$

Normal stress along y-axis, $\sigma_y = -20MPa$

Shearing stress, $\tau_{xy} = 25MPa$

To Find:

- Maximum in-plane shearing stress, τ_{max}
- Absolute maximum shearing stress, τ_{max}

Solution:

Principal stresses, $$\sigma_1, \sigma_2 = \frac{\sigma_x + \sigma_y}{2} \pm \sqrt{\left(\frac{\sigma_x - \sigma_y}{2}\right)^2 + \tau_{xy}^2}$$

$$= \frac{80 - 20}{2} \pm \sqrt{\left(\frac{80 + 20}{2}\right)^2 + 25^2}$$

$$\sigma_1 = 85.90MPa$$

and $$\sigma_2 = -25.90MPa$$

Maximum in-plane shearing stress,

$$\tau_{max} = \pm \sqrt{\left(\frac{\sigma_x - \sigma_y}{2}\right)^2 + \tau_{xy}^2}$$

$$= \pm\sqrt{\left(\frac{80+20}{2}\right)^2 + 25^2}\,MPa = \pm 55.90MPa \textit{ Answer}$$

Mohr's circle for the principal stresses is shown below.

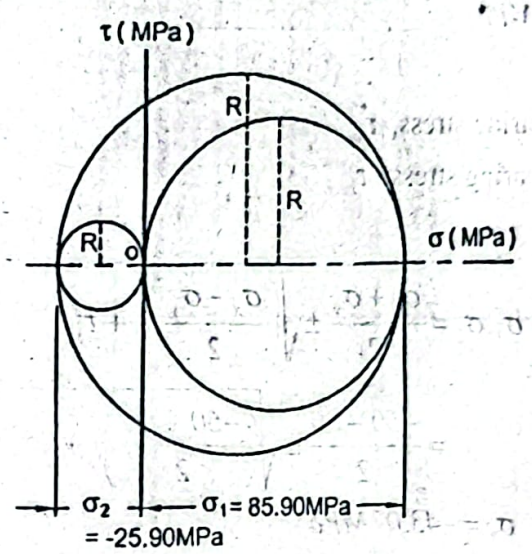

Absolute maximum shearing stress,

$$\tau_{max} = \frac{|\sigma_1 - \sigma_2|}{2} = \frac{|85.90 + 25.90|}{2} = 55.90MPa$$

$$\tau_{max} = \frac{|\sigma_1|}{2} = \frac{|85.90|}{2} = 42.95MPa$$

$$\tau_{max} = \frac{|\sigma_2|}{2} = \frac{|-25.90|}{2} = 12.95MPa$$

Therefore, the required absolute maximum shearing stress,

$$\tau_{max} = 55.90MPa \textit{ Answer}$$

Note: Maximum in-plane shearing stress and the absolute maximum shearing are equal in magnitude.

Problem P8.14:

A stress element is shown in Figure P8.14. Determine the maximum in-plane shearing stress and the absolute maximum shearing stress for this element.

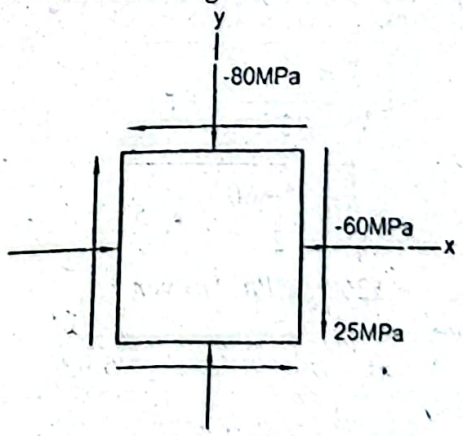

Figure P8.14

Given Data:

Normal stress in x-direction, $\sigma_x = -60MPa$

Normal stress in y-direction, $\sigma_y = -80MPa$

Shearing stress, $\tau_{xy} = 25MPa$

To Find:

- Maximum in-plane shearing stress, τ_{max}
- Absolute maximum shearing stress, τ_{max}

Solution:

Principal stresses, $$\sigma_1, \sigma_2 = \frac{\sigma_x + \sigma_y}{2} \pm \sqrt{\left(\frac{\sigma_x - \sigma_y}{2}\right)^2 + \tau_{xy}^2}$$

$$= \frac{-60 - 80}{2} \pm \sqrt{\left(\frac{-60 + 80}{2}\right)^2 + 25^2}$$

$$\sigma_1 = -43.07MPa$$

and $$\sigma_2 = -96.93MPa$$

Mohr's circle for the principal stresses is shown below.

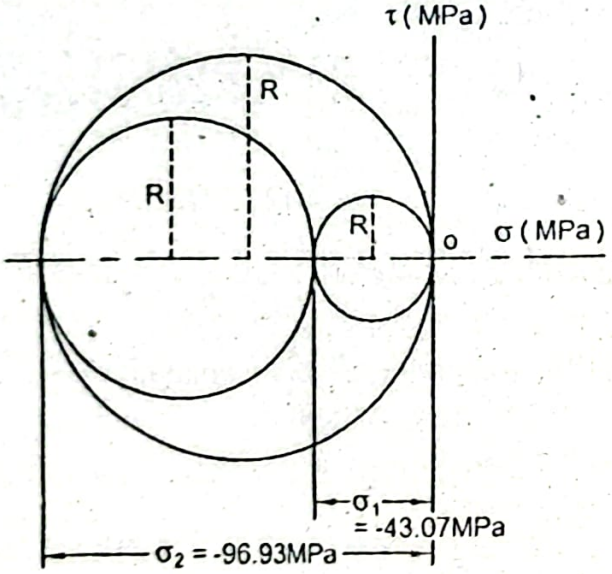

Maximum in-plane shearing stress,

$$\tau_{max} = \pm \sqrt{\left(\frac{\sigma_x - \sigma_y}{2}\right)^2 + \tau_{xy}^2}$$

$$= \pm \sqrt{\left(\frac{-60 + 80}{2}\right)^2 + 25^2}$$

$$= \pm 26.93MPa \text{ Answer}$$

Absolute maximum shearing stress,

$$\tau_{max} = \frac{|\sigma_1 - \sigma_2|}{2} = \frac{|-43.07 + 96.93|}{2} = 26.93MPa$$

$$\tau_{max} = \frac{|\sigma_1|}{2} = \frac{|-43.07|}{2} = 21.54MPa$$

$$\tau_{max} = \frac{|\sigma_2|}{2} = \frac{|-96.93|}{2} = 48.47MPa$$

Therefore, the required absolute maximum shearing stress,

$$\tau_{max} = 48.47MPa \text{ Answer}$$

Problem P8.15:

Determine the absolute maximum shearing stress of the cubical stress element showing the principal stresses as shown in Figure P8.15.

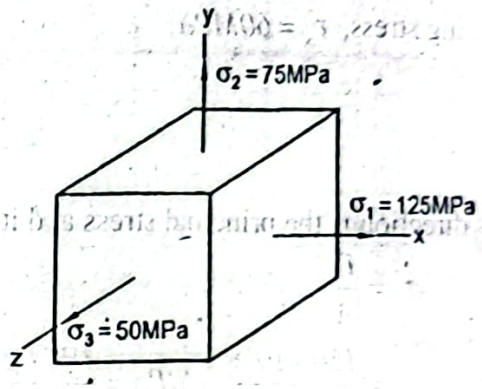

Figure P8.15

Given Data:

Principal stress, $\sigma_1 = 125MPa$

Principal stress, $\sigma_2 = 75MPa$

Principal stress, $\sigma_3 = 50MPa$

To Find:

- Absolute maximum shearing stress, τ_{max}

Solution:

Absolute maximum shearing stresses in the three different planes,

In x-y plane, $$\tau_{max} = \frac{|\sigma_1 - \sigma_2|}{2}$$

$$= \frac{|125 - 75|}{2} MPa = 25MPa$$

In y-z plane, $$\tau_{max} = \frac{|\sigma_2 - \sigma_3|}{2}$$

$$= \frac{|75 - 50|}{2} MPa = 12.5MPa$$

and in x-z plane, $$\tau_{max} = \frac{|\sigma_3 - \sigma_1|}{2}$$

$$= \frac{|50-125|}{2} MPa = 37.5MPa$$

Therefore, the required absolute maximum shearing stress,

$$\tau_{max} = 37.5MPa \quad \textbf{Answer}$$

Problem P8.16:

A solid circular member is subjected to an axial tensile load of $150kN$. If the maxi shearing stress in the member is not to exceed $60MPa$ in any plane, determin diameter of the member.

Given Data:

Axial load, $P = 150kN$

Maximum allowable shearing stress, $\tau_a = 60MPa$

To Find:

- Diameter of member, d

Solution:

Normal stress in the axial direction is the principal stress and it is,

$$\sigma_1 = \frac{P}{A}$$

$$= \frac{150\times10^3\times4}{\pi\times d^2} MPa = \frac{190985.93}{d^2} MPa$$

This stress element is as follows,

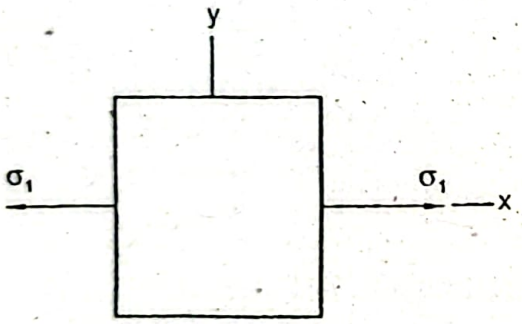

Mohr's circle for this stress element is given below.

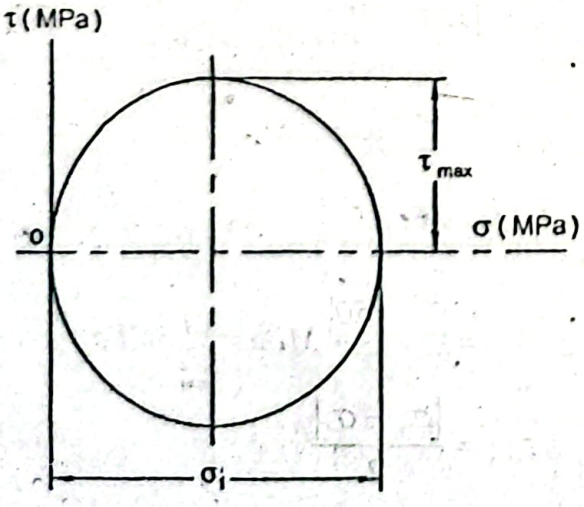

Maximum shearing stress, $\tau_{max} = \frac{\sigma_1}{2}$

or, $\sigma_a = 60 = \frac{190985.93}{2 \times d^2}$

or, $d = 39.89mm$ **Answer**

Problem P8.17:

A solid circular shaft of diameter $75mm$ transmits power at $1500rpm$ when it is subjected to the bending moment of $2485Nm$. If the maximum normal and shearing stresses in the shaft are not to exceed $80MPa$ and $60MPa$ respectively, determine the maximum power that can be transmitted.

Given Data:

Diameter of shaft, $d = 75mm$

Speed of shaft, $n = 1500rpm$

Bending moment, $M = 2485Nm$

Maximum allowable normal stress, $\sigma_a = 80MPa$

Maximum allowable shearing stress, $\tau_a = 60MPa$

To Find:

Maximum power transmitted, H

Solution:

Flexure stress, $\sigma_b = \frac{Mc}{I} = \frac{32M}{\pi d^3}$

$$= \frac{32 \times 2485 \times 10^3}{\pi \times (75)^3}$$

$$= 60MPa$$

Flexure stress is maximum on the top surface of the shaft. Torsional shearing stress is also maximum on the top surface. A stress element is chosen on the top surface of the shaft as follows.

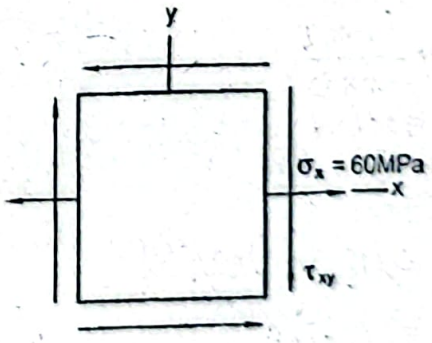

Normal stress, $\sigma_y = \sigma_b = 60MPa$

Mohr's circle for this stress element is given below.

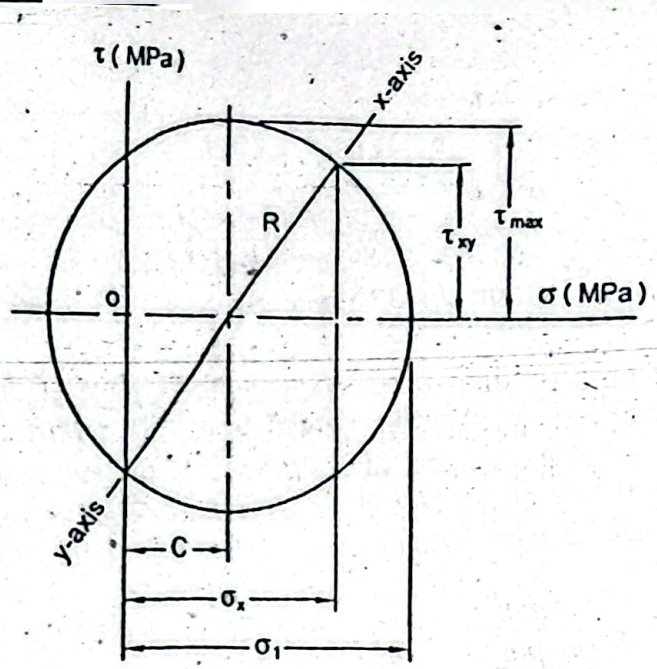

Let us consider that the maximum allowable normal stress equals the maximum pr
stress, $\sigma_1 = \sigma_a = 80MPa$

Distance between the τ -axis and the center of Mohr's circle,

$$C = \frac{\sigma_x + \sigma_y}{2} = \frac{60+0}{2} MPa = 30MPa$$

Therefore, the radius of Mohr's circle,

$$R = \sigma_1 - C = (80-30)MPa = 50MPa$$

From Mohr's circle, we find a relation as,

$$R^2 = \left(\frac{\sigma_x}{2}\right)^2 + \tau_{xy}^2$$

$$\text{or, } \tau_{xy} = \sqrt{50^2 - 30^2}\ MPa = 40MPa$$

Torque for this stress of $40MPa$,

$$\tau_{xy} = \frac{Tc}{J} = \frac{16T}{\pi d^3}$$

$$\text{or, } 40 = \frac{16 \times T}{\pi \times 75^3}$$

$$\text{or, } T = 3313.4Nm$$

Therefore, the maximum power transmitted,

$$H = T\omega$$

$$= 3313.4 \times \frac{2\pi \times 1500}{60}$$

$$= 520.47kW$$

For $\sigma_1 = 80MPa$, the maximum shearing stress,

$$\tau_{max} = R = 50MPa < \tau_a = 60MPa$$

If we select $\tau_{max} = \tau_a = 60MPa$, then radius of Mohr's circle $R = 60MPa$

And the maximum principal stress becomes,

$$\sigma_1 = C + R = (30 + 60)MPa = 90MPa$$

This value exceeds the limiting value of $80MPa$.

Therefore, the required maximum power that can be transmitted,

$$H = 520.47kW \quad Answer$$

Problem P8.18:

A pipe of outside diameter $200mm$ is fabricated from a $8mm$ plate by spiral welding, which makes an angle of 60^0 (counter clockwise) with the longitudinal axis. If the shearing stress along the weld is not to exceed $50MPa$, determine the maximum torque that can be applied.

Given Data:

Outside diameter, $d_o = 200mm$

Wall thickness, $t = 8mm$

Angle of spiral weld $= 60^0$ (ccw)

Allowable shearing stress along weld, $\tau_a = 50MPa$

To Find:

Maximum torque transmitted, T

Solution:

Maximum stress on the outer fiber of the pipe and the spiral weld at an angle of 60^0 with the longitudinal axis of the pipe are shown in the figures below.

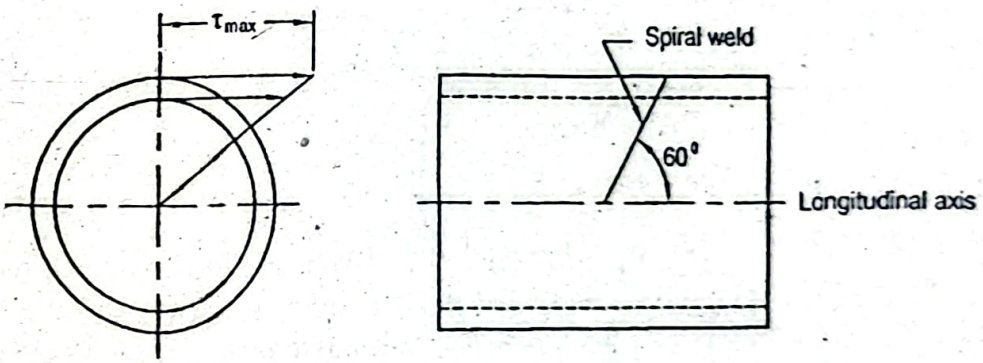

stress element on the top surface of the pipe is as follows:

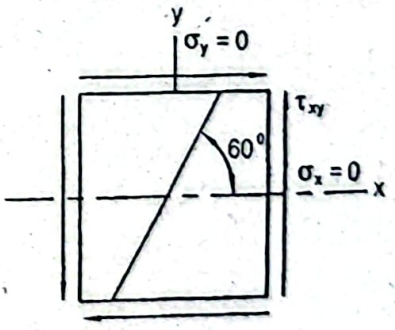

ed on this stress element with co-ordinates of (σ_x, τ_{max}) and (σ_y, τ_{max}) Mohr's circle drawn as shown below. Here τ_{xy} is the maximum stress since it occurs in the plane ere normal stress, $\sigma_y = 0$.

Radius of Mohr's circle, $R = \frac{\quad}{\sin 30^0} = \frac{\quad}{\sin 30^0}$ ... = ... MPa

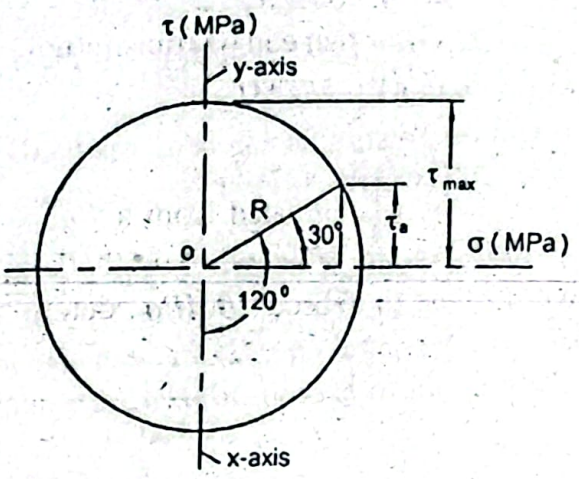

Therefore, the maximum shearing stress,

$$\tau_{max} = R = 100MPa$$

But we have, $$\tau_{max} = \frac{Tc}{J} = \frac{T \times \frac{d_o}{2}}{\frac{\pi}{32}\left(d_o^4 - d_i^4\right)}$$

Inside diameter, $d_i = (d_o - 2 \times t) = (200 - 2 \times 8)mm = 184mm$

Substituting the values in the above equation,

$$100 = \frac{T \times \frac{200}{2}}{\frac{\pi}{32}\left(200^4 - 184^4\right)}$$

or, $T = 44.55kNm$ *Answer*

Problem P8.19:

A rod ABC of diameter $40mm$ is subjected to a load $P = 4kN$ at its free end as shown Figure P8.19. Determine the principal stresses and the maximum shearing stress at t point D on the top surface of the rod. Also find the angles at which principal stress occur.

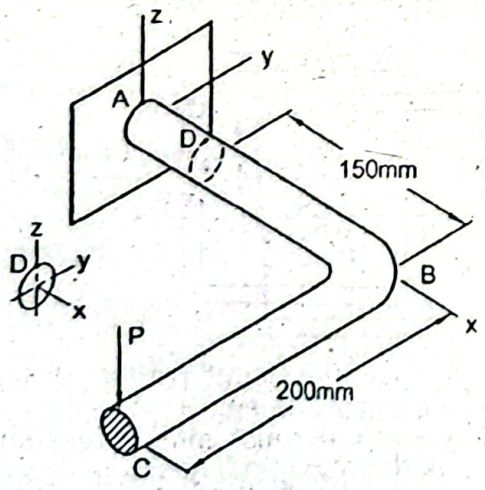

Figure P8.19

Given Data:

Load, $P = 4kN$

Diameter of rod, $d = 40mm$

To Find:

- Principal stresses at point D, σ_1 and σ_2
- Maximum shearing stress at point D, τ_{max}
- Angles at which principal stresses occur, θ

Solution:

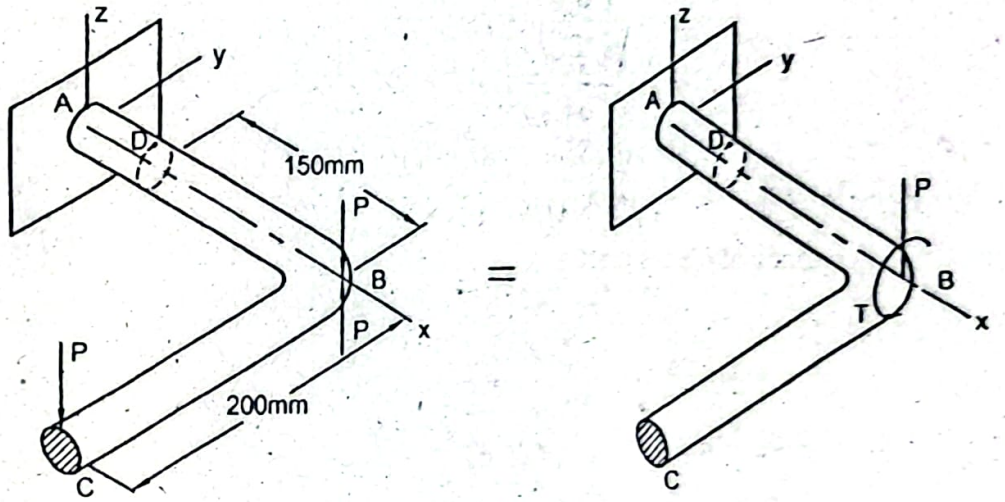

Torque, $T = P \times 200$

$= 4 \times 10^3 \times 200 Nmm = 8 \times 10^5 Nmm$

Moment at the point D, $M = P \times 150$

$= 4 \times 10^3 \times 150 Nmm = 6 \times 10^5 Nmm$

Therefore, the normal stress at the point D,

$$\sigma_x = \frac{Mc}{I} = \frac{6 \times 10^5 \times 40/2}{\frac{\pi \times 40^4}{64}} MPa = 95.49 MPa$$

Shearing stress at the point D, $\tau_{xy} = \frac{Tc}{J} = \frac{8 \times 10^5 \times 40/2}{\frac{\pi \times 40^4}{32}} MPa = 63.66 MPa$

Stress element at the point D is as follows.

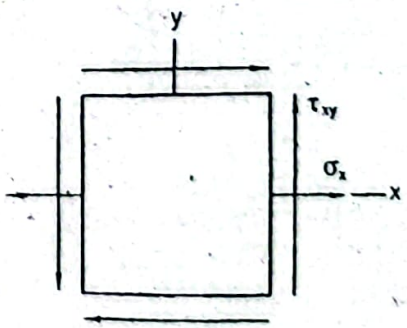

Principal stresses, $$\sigma_1, \sigma_2 = \frac{\sigma_x}{2} \pm \sqrt{\left(\frac{\sigma_x}{2}\right)^2 + \tau_{xy}^2}$$

$$= \frac{95.49}{2} \pm \sqrt{\left(\frac{95.49}{2}\right)^2 + (63.66)^2}$$

$$\sigma_1 = 127.32MPa \text{ Answer}$$

and, $$\sigma_2 = -31.83MPa \text{ Answer}$$

Maximum shearing stress, $$\tau_{max} = \sqrt{\left(\frac{\sigma_x}{2}\right)^2 + \tau_{xy}^2}$$

$$= \sqrt{\left(\frac{95.49}{2}\right)^2 + (63.66)^2}$$

$$= 79.58MPa \text{ Answer}$$

Angles at which the principal planes occur,

$$\tan 2\theta = \frac{2\tau_{xy}}{\sigma_x - \sigma_y}$$

or, $$\tan 2\theta = \frac{2 \times (-63.66)}{95.49}$$

or, $$2\theta = -53.13^0, 126.87^0$$

or, $$\theta = -26.37^0, 63.44^0 \text{ Answer}$$

Mohr's circle for these stresses is shown in the following figure.

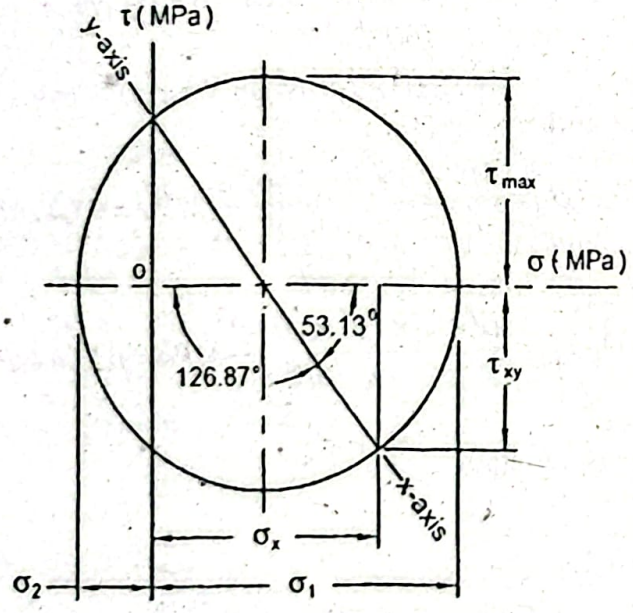

Problem P8.20:

A bracket ABC of uniform diameter *40mm* supports a load $P = 5kN$ at its free end such that the load acts in a plane parallel to *y-z* plane as shown in Figure P8.20. Find the principal stresses and the shearing stress at the point P.

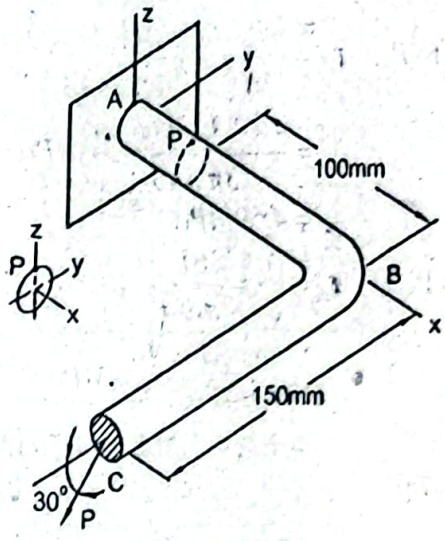

Figure P8.20

Given Data:

Load, $P = 5kN$

Diameter, $d = 40mm$

To Find:

- Principal stresses at point P, σ_1 and σ_2
- Maximum shearing stress at point P, τ_{max}

Solution:

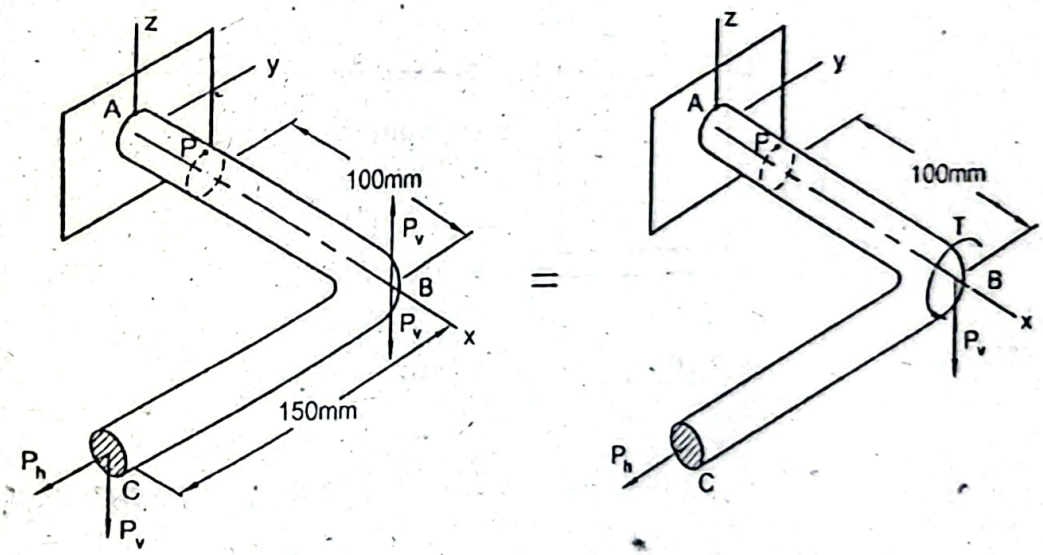

Horizontal component of the force, $P_h = P\cos 30^0 = 5\cos 30^0 = 4.33kN$

Vertical component of the force, $P_v = P\sin 30^0 = 5\sin 30^0 = 2.50kN$

Torque, $T = P_v \times 150$

$= 2.5 \times 150Nm = 375Nm$

Moment at P due to P_v, $M = P_v \times 100$

$= 2.5 \times 100nm = 250Nm$

Direct shear stress at P due to P_h, $\tau_d = \dfrac{4P_h}{3A}$

$$= \frac{4\times 4.33\times 10^3\times 4}{3\pi\times 40^2} MPa$$

$$= 4.59MPa$$

Torsional shearing stress at P, $\tau_t = \dfrac{Tc}{J} = \dfrac{16T}{\pi d^3}$

$$= \frac{16\times 375\times 10^3}{\pi\times 40^3} MPa$$

$$= 29.84MPa$$

Total shearing stress at point P, $\tau_{xy} = \tau_t + \tau_d = (29.84+4.59)MPa = 34.43MPa$

Normal stress at point P, $\sigma_x = \dfrac{Mc}{I} = \dfrac{32M}{\pi d^3}$

$$= \frac{32\times 250\times 10^3}{\pi\times 40^3} MPa = 39.79MPa$$

It may be mentioned here that the bending moment due to the force P_h occurs in the horizontal plane x-y and the point P lies in the vertical plane x-z, as a result the bending stress contributed by the bending moment due to P_h will be zero at the point P. The bending stress due to this force will be maximum at the outer most fibers in the horizontal plane x-y. Stress element at the point P is shown in the figure below.

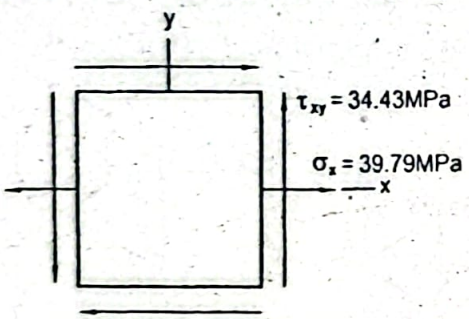

Principal stresses, $\sigma_1, \sigma_2 = \dfrac{\sigma_x}{2} \pm \sqrt{\left(\dfrac{\sigma_x}{2}\right)^2 + \tau_{xy}^2}$

$$= \frac{39.79}{2} \pm \sqrt{\left(\frac{39.79}{2}\right)^2 + (34.43)^2} = 19.90 \pm 39.76$$

Therefore, $\sigma_1 = 59.66MPa$ *Answer*

and, $\sigma_2 = -19.86MPa$ *Answer*

Maximum shearing stress, $\tau_{max} = \pm\sqrt{\left(\dfrac{\sigma_x}{2}\right)^2 + \tau_{xy}^2}$

$$= \pm\sqrt{\left(\frac{39.79}{2}\right)^2 + (34.43)^2}$$

$$= \pm 39.76MPa$$ *Answer*

Problem P8.21:

Two pieces of wooden blocks of rectangular cross-sections $120mm \times 60mm$ have been joined together by glue along a-b at an angle of 30^0 with the axis of the blocks as shown in Figure P8.21. Determine the normal and shearing stresses in the plane of glue for the axial load $P = 360kN$.

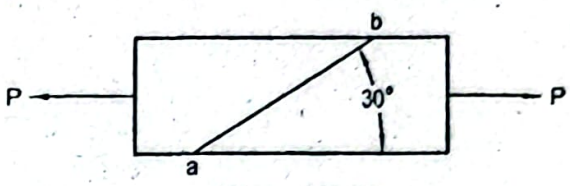

Figure P8.21

Given Data:

Axial load, $P = 360kN$

Cross-sectional area, $A = 120mm \times 60mm$

To Find:

- Normal and shearing stresses in plane of glue, σ' and τ

Solution:

Normal stress along the axis of the wooden block,

$$\sigma_1 = \frac{P}{A} = \frac{360 \times 10^3}{120 \times 60} MPa = 50MPa$$

The stress element for this normal stress is as follows.

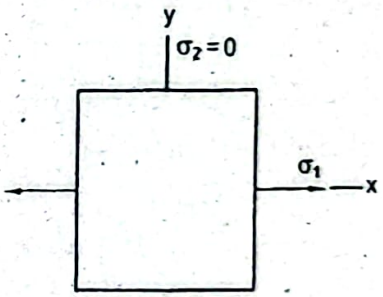

Mohr's circle of this stress element is given below.

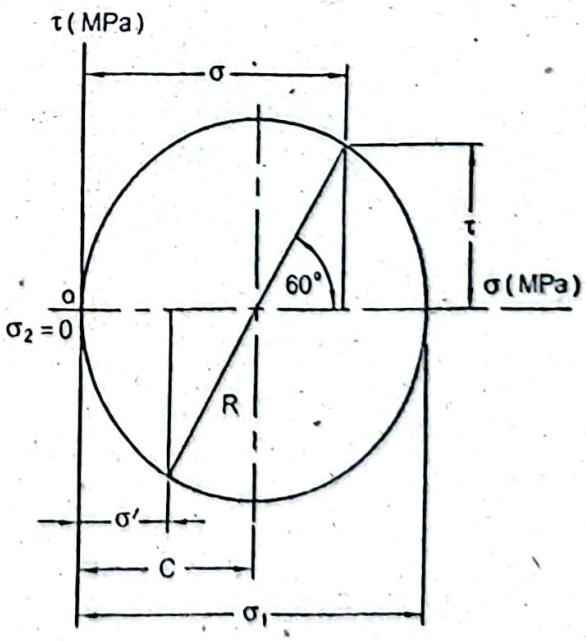

Stresses in the plane of glue are given as follows.

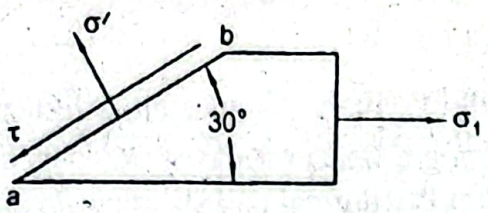

We find the stress element containing the plane of glue as shown below.

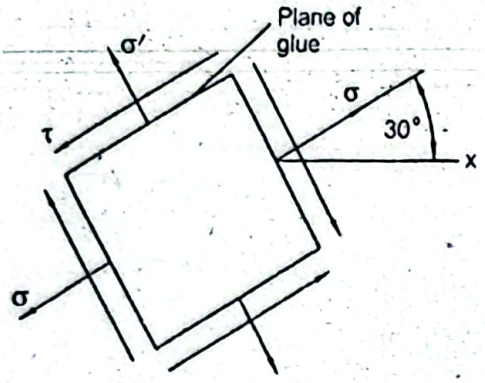

These stresses have also been shown in Mohr's circle.

Radius of Mohr's circle, $R = \frac{\sigma_1}{2} = \frac{50}{2} MPa = 25MPa$

Distance between the center of Mohr's circle and the τ-axis is,

$$C = \frac{\sigma_1}{2} = \frac{50}{2} MPa = 25MPa$$

Normal stress in the plane of glue, $\sigma' = C - R\cos 60^0$

$= 25 - 25\cos 60^0$

$= 12.5MPa$ *Answer*

Shearing stress in the plane of glue, $\tau = -R\sin 60^0$

$= -25\sin 60^0$

$= -21.65MPa$ *Answer*

The normal stress σ' in the plane of glue acts at an angle of $(90^0 + 30^0) = 120^0$ anticlockwise direction with the principal axis.

Problem P8.22:

A solid circular shaft of diameter $75mm$ is subjected to an axial load $P = 150kN$ torque $T = 1000Nm$ as shown in Figure P8.22. Determine the normal and she stresses on the spiral weld plane that makes an angle of 40^0 with the axis of the shaf

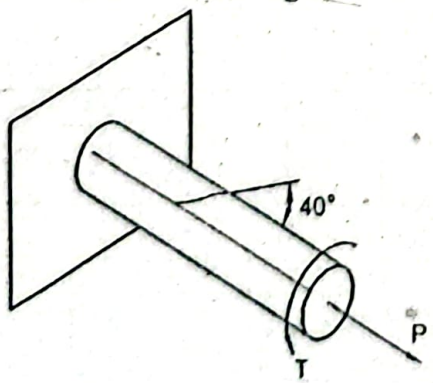

Figure P8.22

iven Data:

xial load, $P = 150kN$

orque, $T = 1000Nm$

iameter of shaft, $d = 75mm$

o Find:

ormal stress at an angle of 40^0 with axis, σ'

ıearing stress at angle of 40^0 with axis, τ

olution:

ormal stress along the axis of the shaft,

$$\sigma_x = \frac{P}{A} = \frac{4P}{\pi d^2} = \frac{150\times10^3\times4}{\pi\times75^2} MPa = 33.95MPa$$

ıearing stress,

$$\tau_{xy} = \frac{TC}{J} = \frac{16T}{\pi d^3} = \frac{16\times1000\times10^3}{\pi\times75^3} MPa = 12.07MPa$$

stress element on the top surface of the shaft is given below.

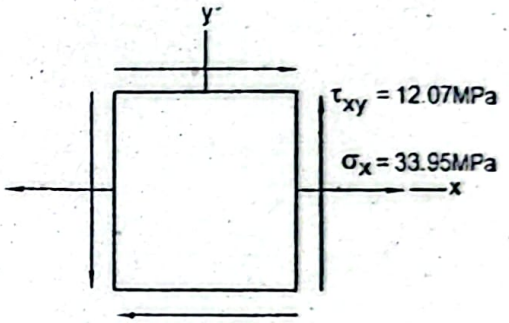

ohr's circle for this element is given below.

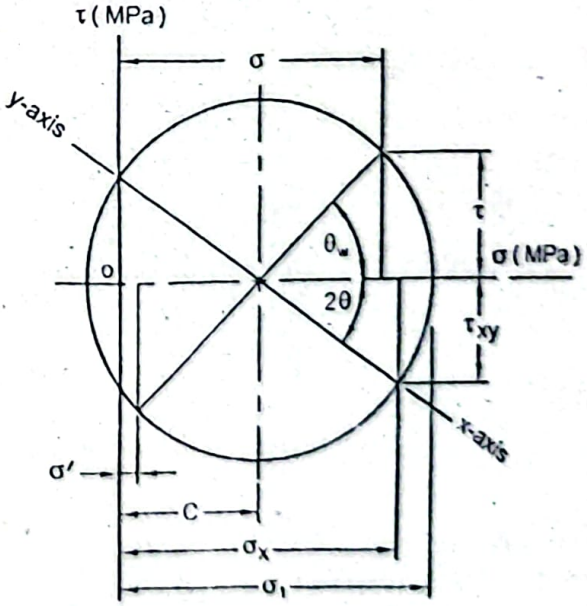

gles at which the principal axes occur,

$$\tan 2\theta = \frac{2\tau_{xy}}{\sigma_x - \sigma_y}$$

$$\text{or, } \tan 2\theta = \frac{2\times(-12.07)}{33.95} \quad (\text{Since } \sigma_y = 0)$$

$$\text{or, } 2\theta = -35.42^0, 144.58^0$$

That is, $\theta = -17.71^0, 72.29^0$

Distance between the τ-axis and the center of Mohr's circle,

$$C = \frac{\sigma_x + \sigma_y}{2}$$

$$= \frac{33.95}{2} MPa = 16.98MPa \quad (\text{Since } \sigma_y = 0)$$

Radius of Mohr's circle, $R = \sqrt{\left(\frac{\sigma_x}{2}\right)^2 + \tau_{xy}^2}$

$$= \sqrt{\left(\frac{33.95}{2}\right)^2 + (12.07)^2}$$

$$= 20.83MPa$$

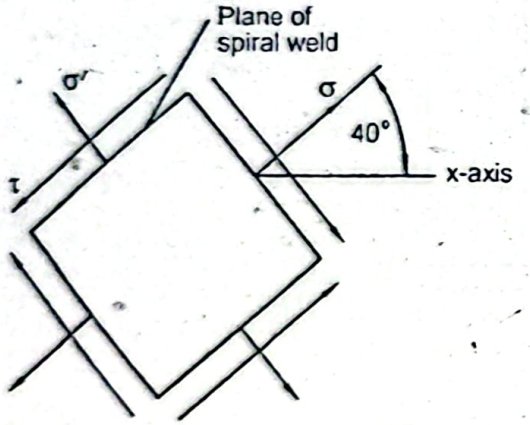

Plane of spiral weld makes an angle of θ_w with the principal axis of σ_1.

$$\theta_w = (40\times 2)^0 - 35.42^0 = 44.58^0$$

Shearing stress at the plane of the spiral weld,

$$\tau = -R\sin\theta_w$$

$$= -20.83\sin 44.58^0 = 14.62MPa \text{ Answer}$$

Normal stress at the plane of the spiral weld,

$$\sigma' = C - R\cos\theta_w$$

$$= 16.98 - 20.83\cos 44.58^0$$

$$= 2.14MPa \text{ Answer}$$

Problem P8.23:

A circular pipe of outside diameter *500mm* and wall thickness *3mm* is subjected to an axial tensile load of *300kN* and a torque of *75kNm* together. Determine the principal stresses and the maximum shearing stress on its surface.

Given Data:

Outside diameter of pipe, $d_o = 500mm$

Wall thickness, $t = 3mm$
Axial tensile load, $P = 300kN$
Torque, $T = 75kNm$

To Find:

Principal stresses, σ_1 and σ_2

Maximum shearing stress, τ_{max}

Solution:

A stress element on the surface of the pipe is given below.

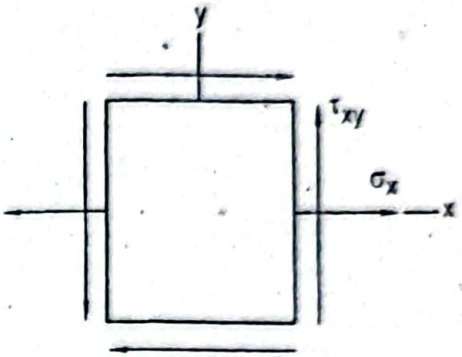

Outside diameter, $d_o = 500mm$

Inside diameter, $d_i = d_o - 2 \times t$

$= (500 - 2 \times 3)mm = 494mm$

Normal stress, $$\sigma_x = \frac{P}{A} = \frac{300 \times 10^3}{\frac{\pi}{4}(500^2 - 494^2)} MPa = 64.05MPa$$

Shearing stress, $$\tau_{xy} = \frac{Tc}{J} = \frac{75 \times 10^6 \times 500/2}{\frac{\pi}{32}(500^4 - 494^4)} MPa = 64.82MPa$$

Principal stresses, $$\sigma_1, \sigma_2 = \frac{\sigma_x}{2} \pm \sqrt{\left(\frac{\sigma_x}{2}\right)^2 + \tau_{xy}^2}$$

$$= \frac{64.05}{2} \pm \sqrt{\left(\frac{64.05}{2}\right)^2 + (64.82)^2}$$

$$= (32.03 \pm 72.30)MPa$$

Therefore, $\sigma_1 = 104.33MPa$ ***Answer***

and, $\sigma_2 = -40.27MPa$ ***Answer***

Maximum shearing stress, $$\tau_{max} = \sqrt{\left(\frac{\sigma_x}{2}\right)^2 + \tau_{xy}^2}$$

$$= \sqrt{\left(\frac{64.05}{2}\right)^2 + (64.82)^2}$$

$= 72.30MPa$ ***Answer***

Problem P8.24:

A solid circular steel shaft of diameter $80mm$ and length $5m$ is subjected to an axi tensile load $P = 500kN$ and a torque T. This torque twists the shaft through an angle 1^0 in a length of $5mm$. Determine the maximum normal stress and the shearing stre Consider $G_s = 80GPa$.

Given Data:

Diameter of shaft, $d = 80mm$

Axial tensile load, $P = 500kN$

Twisting angle, $\phi = 1^0$

Length of shaft, $L = 5m$

Modulus of rigidity, $G_s = 80GPa$

To Find:

Maximum normal stress, σ_1

Maximum shearing stress, τ_{max}

Solution:

Normal stress, $$\sigma_x = \frac{P}{A} = \frac{4P}{\pi d^2}$$

$$= \frac{4 \times 500 \times 10^3}{\pi \times 80^2} MPa = 99.47 MPa$$

We have angle of twist, $$\phi = \frac{TL}{GJ}$$

or, $$T = \frac{\phi GJ}{L}$$

$$= \frac{\frac{1.0 \times \pi}{180} \times 80 \times 10^3 \times \frac{\pi}{32} \times 80^4}{5 \times 10^3} MPa$$

$$= 1122.94 Nm$$

Shearing stress, $$\tau_{xy} = \frac{Tc}{J} = \frac{16T}{\pi d^3}$$

$$= \frac{16 \times 1122.94 \times 10^3}{\pi \times 80^3} MPa$$

$$= 11.17 MPa$$

Maximum shearing stress, $$\tau_{max} = \sqrt{\left(\frac{\sigma_x}{2}\right)^2 + \tau_{xy}^2}$$

$$= \sqrt{\left(\frac{99.47}{2}\right)^2 + (11.17)^2} MPa = 50.97 MPa \text{ Answer}$$

Maximum normal stress, $$\sigma_1 = \frac{\sigma_x}{2} + \sqrt{\left(\frac{\sigma_x}{2}\right)^2 + \tau_{xy}^2} = \frac{99.47}{2} + \sqrt{\left(\frac{99.47}{2}\right)^2 + (11.17)^2}$$

$$= 100.71 MPa \text{ Answer}$$

Problem P8.25:

A solid circular shaft of diameter $100mm$ is subjected to an axial compressive load $P = 550kN$. Determine the maximum power that can be transmitted by this shaft at $200rpm$ if the maximum normal stress and the maximum shearing stress are not to exceed $100MPa$ and $65MPa$ respectively.

Given Data:

Shaft diameter, $d = 100mm$

Axial compressive load, $P = 550kN$

Speed of shaft, $n = 200rpm$

Allowable normal stress, $\sigma_a = 100MPa$

Allowable shearing stress, $\tau_a = 65MPa$

To Find:

- Maximum power transmitted, H

Solution:

Stress in the axial direction, $\sigma_x = \dfrac{-P}{A} = -\dfrac{4P}{\pi d^2} = -\dfrac{4\times550\times10^3}{\pi\times100^2}MPa = -70.03MPa$

Let for transmission of power the shearing stress developed is τ_{xy}.

Stress element is as follows.

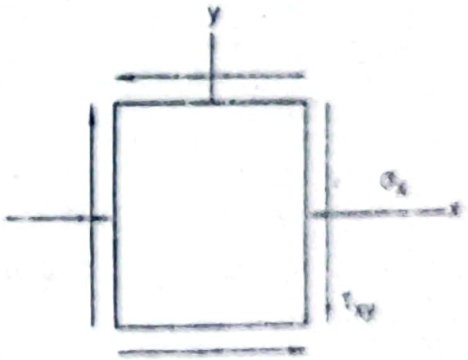

Mohr's circle for this stress element is shown below.

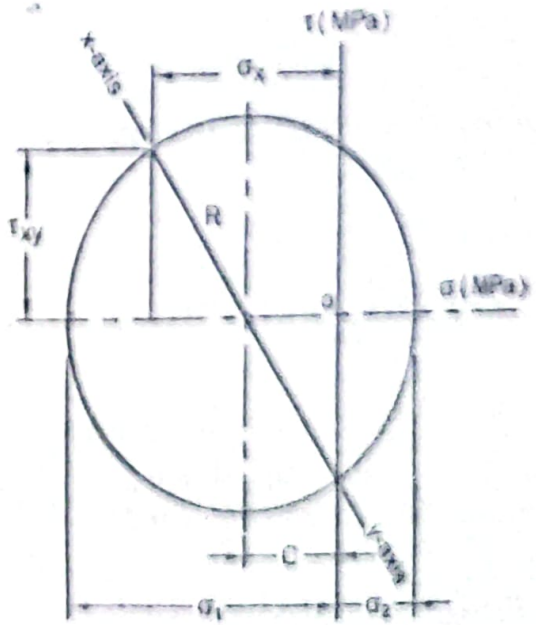

Distance between the τ-axis and the center of Mohr's circle,

$$C = \frac{\sigma_x}{2} = \frac{70.03}{2} MPa = 35.02MPa$$

Selecting the maximum principal stress, $\sigma_1 = \sigma_a = 100MPa$

Radius of Mohr's circle, $R = \sigma_1 - C = (100 - 35.02)MPa = 64.98MPa$

From Mohr's circle, $R^2 = \left(\frac{\sigma_x}{2}\right)^2 + \tau_{xy}^2$

$$\text{or, } (64.98)^2 = \left(\frac{70.03}{2}\right)^2 + \tau_{xy}^2$$

$$\text{or, } \tau_{xy} = 54.74MPa$$

For this case, the in-plane shearing stress is maximum, that is,

$$\tau_{max} = \frac{|\sigma_1 - \sigma_2|}{2}$$

Radius R of Mohr's circle drawn above is the maximum.

Writing, $R = \tau_{max} = \tau_a = 65MPa$

$$R^2 = \left(\frac{\sigma_x}{2}\right)^2 + \tau_{xy}^2$$

$$\text{or, } 65^2 = \left(\frac{70.03}{2}\right)^2 + \tau_{xy}^2$$

$$\text{or, } \tau_{xy} = 54.76MPa$$

Of the two values of τ_{xy}, taking the lower value, $\tau_{xy} = 54.74MPa$

$$\tau_{xy} = \frac{Tc}{J} = \frac{16T}{\pi d^3}$$

$$\text{or, } 54.74 = \frac{16 \times T}{\pi \times 100^3}$$

$$\text{or, } T = 10748.17Nm$$

Therefore, the required maximum power that can be transmitted,

$$H = T\omega$$

$$= 10748.12 \times \frac{2 \times \pi \times 200}{60}$$

$$= 225.11kW \quad \textit{Answer}$$

Problem P8.26:

A machine shaft of diameter $100mm$ is subjected to a bending moment $M = 3000Nm$. If the maximum normal stress and the maximum shearing stress are not to exceed $110MPa$ and $80MPa$ respectively, determine the maximum torque that can be transmitted.

Given Data:

Diameter of shaft, $d = 100mm$

Bending moment, $M = 3000Nm$

Allowable normal stress, $\sigma_a = 110MPa$

Allowable shearing stress, $\tau_a = 80MPa$

To Find:

- Maximum torque transmitted, T

Solution:

Normal stress due to bending, $\sigma_x = \frac{Mc}{I} = \frac{32M}{\pi d^3}$

$$= \frac{32 \times 3000 \times 10^3}{\pi \times 100^3} MPa$$

$$= 30.56MPa$$

Let τ_{xy} is the shearing stress developed due to the torque transmitted.

Stress element for these stresses is shown below.

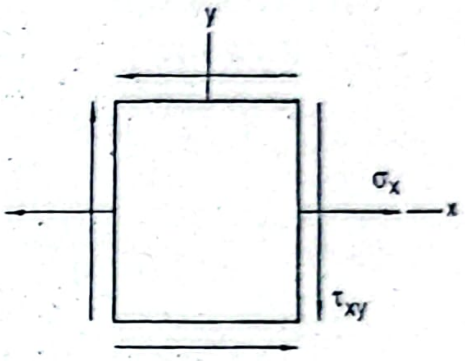

Mohr's circle for this stress element is given below.

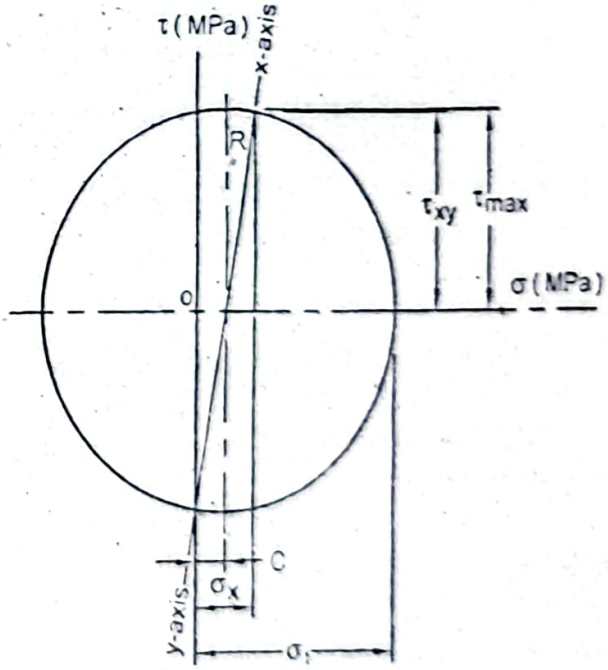

istance between the τ-axis and the center of Mohr's circle,

$$C = \frac{\sigma_x}{2} = \frac{30.56}{2} MPa = 15.28MPa$$

incipal stresses, $\sigma_1 = \sigma_a = 110MPa$

idius of Mohr's circle, $R = \sigma_1 - C = (110 - 15.28)MPa = 94.72MPa$

From Mohr's circle, $R^2 = \left(\frac{\sigma_x}{2}\right)^2 + \tau_{xy}^2$

or, $(94.72)^2 = \left(\frac{30.56}{2}\right)^2 + \tau_{xy}^2$

or, $\tau_{xy} = 93.48MPa$

But we have, $\tau_{xy} = \frac{16T}{\pi d^3}$

or, $93.48 = \frac{16T}{\pi \times 100^3}$

or, $T = 18.35kNm$

Now considering the allowable maximum shearing stress $\tau_a = 80MPa$,

$\tau_{max} = \tau_a = 80MPa$

For this Mohr's circle, $\tau_{max} = R = 80MPa$

or, $R^2 = \left(\frac{\sigma_x}{2}\right)^2 + \tau_{xy}^2$

or, $80^2 = \left(\frac{30.56}{2}\right)^2 + \tau_{xy}^2$

or, $\tau_{xy} = 78.53MPa$

We have, $\tau_{xy} = \frac{16T}{\pi d^3}$

or, $78.53 = \frac{16T}{\pi \times 100^3}$

or, $T = 15.42kNm$

Therefore, the required maximum torque that can be transmitted,

$T = 15.42kNm$ *Answer*

Problem P8.27:

A solid circular shaft of diameter $100mm$ is subjected to a bending mom $M = 3500Nm$ and an axial tensile load $P = 300kN$. Determine the maximum torque tl can be applied if the maximum normal stress and the maximum shear stress are not exceed $110MPa$ and $65MPa$ respectively.

Given Data:

Diameter of shaft, $d = 100mm$

Bending moment, $M = 3500Nm$

Axial tensile load, $P = 300kN$

Allowable normal stress, $\sigma_a = 110MPa$

Allowable shear stress, $\tau_a = 65MPa$

To Find:

- Maximum torque applied, T

lution:

nding stress, $$\sigma_b = \frac{Mc}{I} = \frac{32M}{\pi d^3}$$

$$= \frac{32 \times 3500 \times 10^3}{\pi \times 100^3}$$

$$= 35.65MPa$$

nsile stress due to axial load, $\sigma_t = \frac{P}{A} = \frac{4P}{\pi d^2}$

$$= \frac{4 \times 300 \times 10^3}{\pi \times 100^2}$$

$$= 38.20MPa$$

al axial stress on the top surface of the shaft,

$$\sigma_x = (\sigma_b + \sigma_t) = (35.65 + 38.20)MPa = 73.85MPa$$

due to this torque the shearing stress developed is τ_{xy}.

ess element for this stress is shown below.

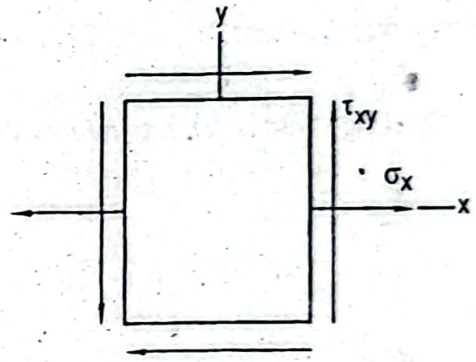

hr's circle for this stress element is given below.

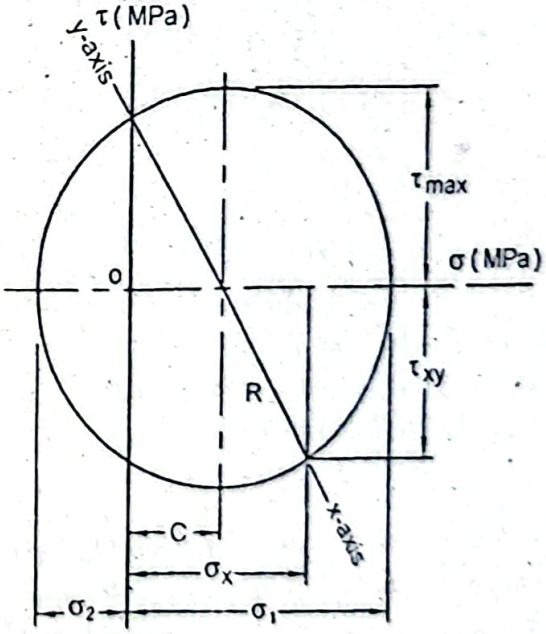

ance between the center of Mohr's circle and the τ-axis,

$$C = \frac{\sigma_x}{2} = \frac{73.85}{2}MPa = 36.93MPa$$

Considering the limiting value of the normal stress,

$$\sigma_1 = \sigma_a = 110MPa$$

Therefore, radius of circle, $R = \sigma_1 - C = (110 - 36.93)MPa = 73.07MPa$

From Mohr's circle we can write,

$$R^2 = \left(\frac{\sigma_x}{2}\right)^2 + \tau_{xy}^2$$

$$\text{or, } (73.07)^2 = \left(\frac{73.85}{2}\right)^2 + \tau_{xy}^2$$

$$\text{or, } \tau_{xy} = 63.05MPa$$

We have,

$$\tau_{xy} = \frac{Tc}{J} = \frac{16T}{\pi d^3}$$

$$\text{or, } 63.05 = \frac{16 \times T}{\pi \times 100^3}$$

$$\text{or, } T = 12.38kNm$$

Again considering the limiting shearing stress,

$$\tau_{max} = \tau_a = 65MPa$$

Here the in-plane maximum shearing stress is the maximum value and it is,

$$\tau_{max} = \frac{|\sigma_1 - \sigma_2|}{2}$$

Here, $R = \tau_{max} = 65MPa$

Now writing, $R^2 = \left(\frac{\sigma_x}{2}\right)^2 + \tau_{xy}^2$

$$\text{or, } (65)^2 = \left(\frac{73.85}{2}\right)^2 + \tau_{xy}^2$$

$$\text{or, } \tau_{xy} = 53.49MPa$$

We have, $\tau_{xy} = \frac{16T}{\pi d^3}$

$$\text{or, } 53.49 = \frac{16T}{\pi \times 100^3}$$

$$\text{or, } T = 10.50kNm$$

Therefore, the required maximum torque that can be applied,

$$T = 10.50kNm \text{ Answer}$$

Problem P8.28:

A small hydraulic turbine having solid shaft of diameter *120mm*, transmits po *250rpm* and supports an axial thrust load of *650kN*. Determine the maximum that can be transmitted if the maximum normal stress and the maximum shearing are not to exceed *100MPa* and *70MPa* respectively.

Given Data:

Diameter of shaft, $d = 120mm$

Speed of shaft, $n = 250rpm$

Axial thrust load, $P = 650kN$

Allowable normal stress, $\sigma_a = 100MPa$

Allowable shear stress, $\tau_a = 70MPa$

To Find:

- Maximum power transmitted, H

Given:

Axial compressive stress, $$\sigma_c = -\frac{P}{A} = -\frac{4P}{\pi d^2}$$

$$= -\frac{4 \times 650 \times 10^3}{\pi \times 120^2} = -57.47MPa$$

Let τ_{xy} is the shearing stress developed due to the power transmission.

Then stress element on top surface of shaft,

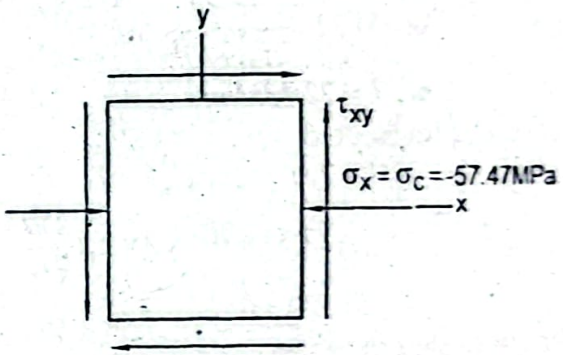

Mohr's circle of this stress element is as follows.

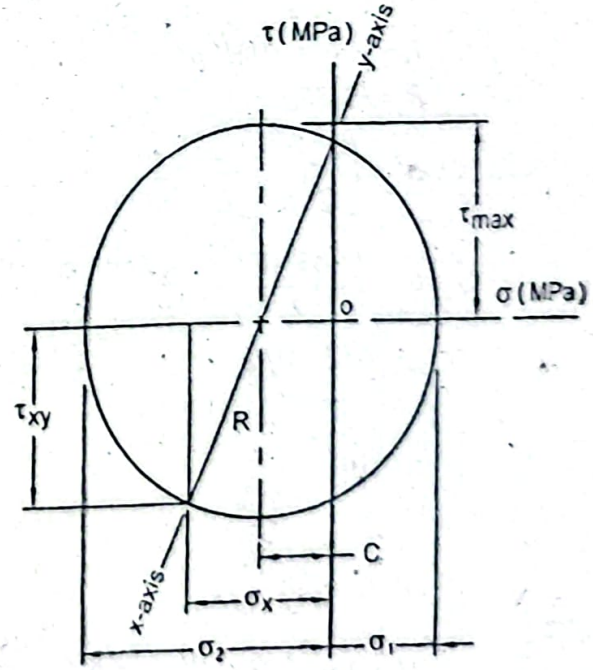

Distance between the τ-axis and the center of Mohr's circle,

$$C = \frac{\sigma_x}{2} = -\frac{57.47}{2} MPa = -28.735MPa$$

Considering the allowable normal stress,

$$\sigma_2 = \sigma_a = -100MPa$$

To find radius of Mohr's circle, $\sigma_2 = C + R$

or, $-100 = -28.735 + R$

or, $R = -71.265MPa$

From Mohr's circle, $R^2 = \left(\frac{\sigma_x}{2}\right)^2 + \tau_{xy}^2$

or, $(-71.265)^2 = \left(\frac{-57.47}{2}\right)^2 + \tau_{xy}^2$

or, $\tau_{xy} = 65.22MPa$

We have, $\tau_{xy} = \frac{16T}{\pi d^3}$

or, $65.22 = \frac{16 \times T}{\pi \times 120^3}$

or, $T = 22.13kNm$

Therefore, the power that can be transmitted,

$$H = T\omega$$

$$= 22.13 \times 10^3 \times 2 \times \pi \times \frac{250}{60}$$

$$= 579.33kW$$

Again considering the allowable shearing stress,

Maximum shearing stress, $\tau_{max} = \frac{|\sigma_1 - \sigma_2|}{2}$

But, $\tau_{max} = \tau_a = 70MPa$

Therefore, $R = 70MPa$

Now from Mohr's circle, $R^2 = \left(\frac{\sigma_x}{2}\right)^2 + \tau_{xy}^2$

or, $70^2 = \left(\frac{-57.47}{2}\right)^2 + \tau_{xy}^2$

or, $\tau_{xy} = 63.83MPa$

We have, $\tau_{xy} = \frac{16T}{\pi d^3}$

or, $63.83 = \frac{16T}{\pi \times 120^3}$

or, $T = 21.66kNm$

Power that can be transmitted, $H = T\omega = 21.66 \times 10^3 \times 2 \times \pi \times \frac{250}{60}$

$= 566.98kW$

Therefore, the required power, $H = 566.98kW$ *Answer*

Problem P8.29:

A solid circular shaft is subjected to a bending moment $M = 3.5kNm$. It also transmits $100kW$ power simultaneously at 600 rpm. Determine the shaft diameter if the allowable normal stress $\sigma_a \le 100MPa$ and the allowable shearing stress $\tau_a \le 60MPa$.

Given Data:

Bending moment, $M = 3.5kNm$

Power transmitted, $H = 100kW$

Speed of shaft, $n = 600$ rpm

Allowable normal stress, $\sigma_a \le 100MPa$

Allowable shearing stress, $\tau_a \le 60MPa$

To Find:

- Shaft diameter, d

Solution:

Bending stress, $$\sigma_b = \frac{Mc}{I} = \frac{32M}{\pi d^3}$$

$$= \frac{32 \times 3.5 \times 10^6}{\pi \times d^3} = \frac{35.65 \times 10^6}{d^3} MPa$$

Normal stress, $$\sigma_x = \sigma_b = \frac{35.65 \times 10^6}{d^3} MPa$$

Power, $$H = T\omega$$

or, $$100 \times 10^3 = T \times \frac{2\pi \times 600}{60}$$

or, $$T = 1591.55Nm$$

Shearing stress, $$\tau_{xy} = \frac{Tc}{J} = \frac{16T}{\pi d^3}$$

or, $$\tau_{xy} = \frac{16 \times 1591.55 \times 10^3}{\pi d^3} = \frac{8.106 \times 10^6}{d^3} MPa$$

A stress element on the top surface of the shaft is as follows.

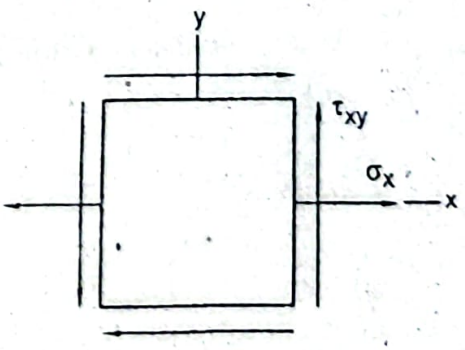

Mohr's circle of this stress element is shown below.

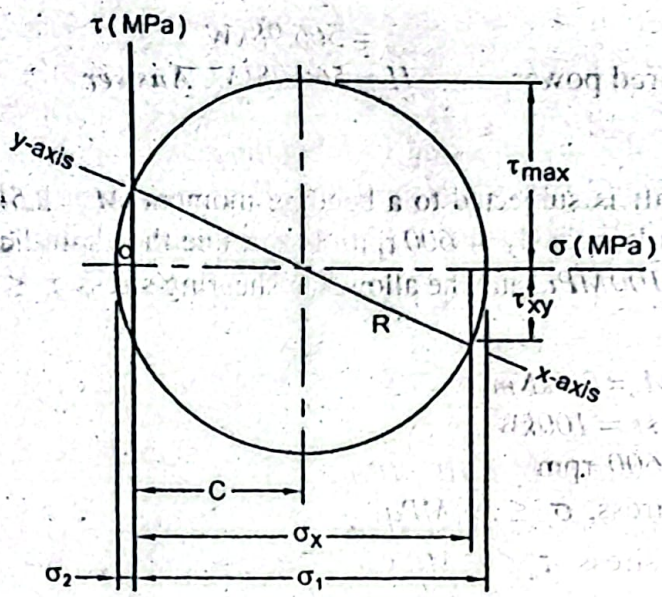

Distance between the center of Mohr's circle and the τ -axis,

$$C = \frac{\sigma_x}{2} = \frac{35.65 \times 10^6}{2} = \frac{17.825 \times 10^6}{d^3} MPa$$

Considering the allowable normal stress,

$$\sigma_1 = \sigma_a = 100MPa$$

Radius of Mohr's circle, $R = \sigma_1 - C$

$$= \left[100 - \frac{17.825 \times 10^6}{d^3} \right]$$

From Mohr's circle, $R^2 = \left(\frac{\sigma_x}{2} \right)^2 + \tau_{xy}^2$

$$\text{or, } \left[100 - \frac{17.825 \times 10^6}{d^3} \right]^2 = \left(\frac{17.825 \times 10^6}{d^3} \right)^2 + \left(\frac{8.106 \times 10^6}{d^3} \right)^2$$

$$\text{or, } 100 - \frac{17.825 \times 10^6}{d^3} = \frac{19.582 \times 10^6}{d^3}$$

$$\text{or, } d = 72.02mm$$

Now considering the allowable shearing stress,

$$\tau_{max} = \tau_a = 60MPa$$

Maximum shearing stress τ_{max} is the in-plane maximum shearing stress.

That is, $\tau_{max} = \frac{|\sigma_1 - \sigma_2|}{2}$

Radius of circle, $R = \tau_{max} = 60MPa$

But we have, $R^2 = \left(\frac{\sigma_x}{2} \right)^2 + \tau_{xy}^2$

$$60^2 = \left(\frac{17.825\times10^6}{d^3}\right)^2 + \left(\frac{8.106\times10^6}{d^3}\right)^2$$

or, $60 = \dfrac{19.582\times10^6}{d^3}$

or, $d = 68.82mm$

Therefore, the required shaft diameter, $d = 72.02mm$ ***Answer***

Problem P8.30:

A solid circular shaft is subjected to a bending moment $M = 2500Nm$ and a torque $T = 3200Nm$ together. Determine the shaft diameter if the maximum normal stress and the shearing stress are not to exceed $110MPa$ and $65MPa$ respectively,

Given Data:

Bending moment, $M = 2500Nm$

Torque, $T = 3200Nm$

Allowable normal stress, $\sigma_a = 110MPa$

Allowable shearing stress, $\tau_a = 65MPa$

To Find:

- Shaft diameter, d

Solution:

Bending moment, $\sigma_b = \dfrac{32M}{\pi d^3} = \dfrac{32\times2500\times10^3}{\pi d^3} = \dfrac{25464.79\times10^3}{d^3} MPa$

Shearing stress, $\tau_b = \dfrac{16T}{\pi d^3} = \dfrac{16\times3200\times10^3}{\pi d^3} = \dfrac{16297.47\times10^3}{d^3} MPa$

Writing normal stress, $\sigma_x = \sigma_b = \dfrac{25464.79\times10^3}{d^3} MPa$

and $\tau_{xy} = \tau = \dfrac{16297.47\times10^3}{d^3} MPa$

A stress element is found on the top surface of the shaft as follows.

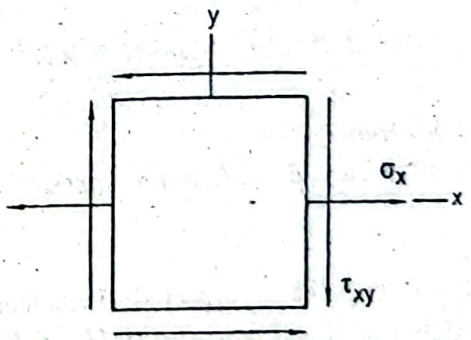

Mohr's circle of this stress element is shown below.

Distance between the center of Mohr's circle and the τ-axis,

$$C = \frac{\sigma_x}{2} = \frac{25464.79\times10^3}{2\times d^3} = \frac{12732.40\times10^3}{d^3} MPa$$

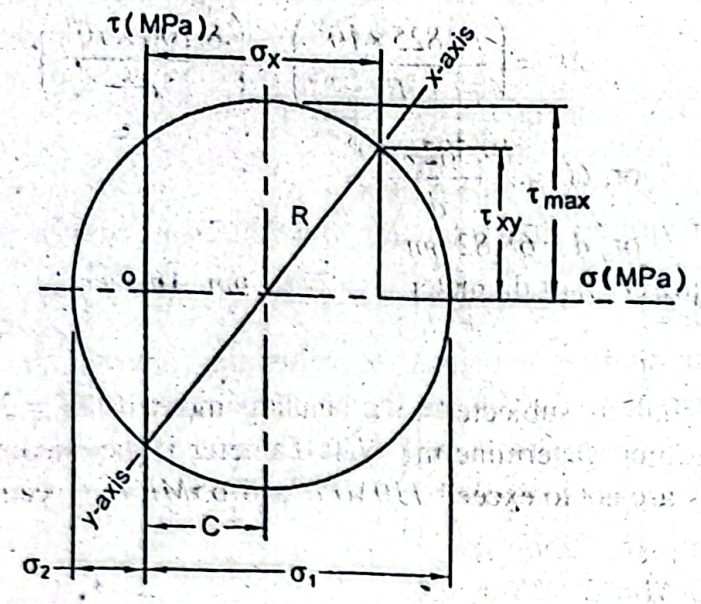

Radius of Mohr's circle,

$$R = \sqrt{\left(\frac{\sigma_x}{2}\right)^2 + \tau_{xy}^2}$$

$$\text{or, } R = \sqrt{\left(\frac{25464.79\times10^3}{2d^3}\right)^2 + \left(\frac{16297.47\times10^3}{d^3}\right)^2}$$

$$\text{or, } R = \frac{20681.43\times10^3}{d^3}$$

Considering the allowable shear stress,

$$\tau_a = \tau_{max} = R = \frac{20681.43\times10^3}{d^3}$$

$$\text{or, } 65 = \frac{20681.43\times10^3}{d^3}$$

$$\text{or, } d = 67.98mm$$

Considering the maximum principal stress equals the allowable normal stress,

$$\sigma_a = \sigma_1 = C + R$$

$$\text{or. } 110 = \frac{12732.40\times10^3}{d^3} + \frac{20681.43\times10^3}{d^3}$$

$$\text{or, } d = 66.94mm$$

Therefore, the required shaft diameter, $d = 67.98mm$ *Answer*

Problem P8.31:

A solid circular shaft of diameter *25mm* is subjected to a bending moment together w a torque. Due to the bending moment a stress of *100MPa* is developed in the shaft. I both the bending moment and torque the maximum principal stress developed at the sa point is *130MPa*. Determine the moment and torque applied to the shaft.

Given Data:

Diameter of shaft, $d = 25mm$

Stress developed due to bending moment, $\sigma_x = 100MPa$

Maximum principal stress, $\sigma_1 = 130MPa$

To Find:

- Applied moment, M
- Applied torque, T

Solution:

Mohr's circle for given condition is as follows.

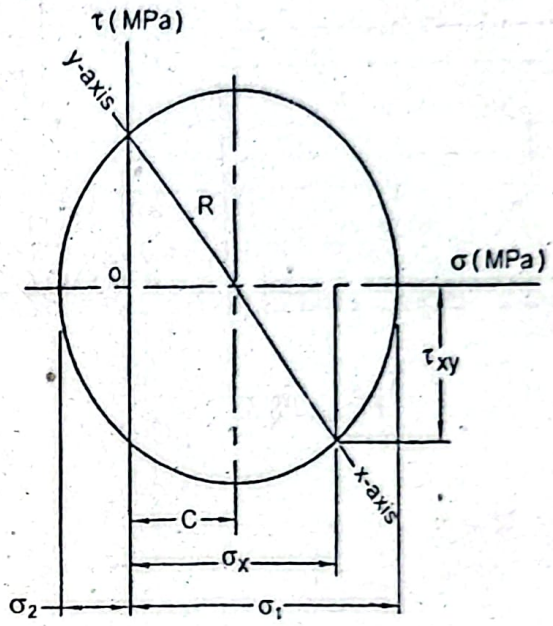

istance between the center of Mohr's circle and the τ-axis,

$$C = \frac{\sigma_x}{2} = \frac{100}{2} MPa = 50MPa$$

aximum principal stress, $\sigma_1 = C + R$

ierefore, the radius of Mohr's circle, $R = \sigma_1 - C = (130 - 50)MPa = 80MPa$

e have, $$R^2 = \left(\frac{\sigma_x}{2}\right)^2 + \tau_{xy}^2$$

$$\text{or, } 80^2 = \left(\frac{100}{2}\right)^2 + \tau_{xy}^2$$

$$\text{or, } \tau_{xy} = 62.45MPa$$

: also have, $$\tau_{xy} = \frac{Tc}{J} = \frac{16T}{\pi d^3}$$

$$\text{or, } 62.45 = \frac{16T}{\pi \times 25^3}$$

$$\text{or, } T = 191.59Nm \text{ Answer}$$

ain bending stress, $$\sigma_x = \frac{Mc}{I} = \frac{32M}{\pi d^3}$$

$$\text{or, } 100 = \frac{32M}{\pi \times 253}$$

$$\text{or, } M = 153.40 Nm \text{ Answer}$$

Problem P8.32:

Determine the principal stresses and the maximum shearing stress at the point A of a beam as shown in Figure P8.32 and the angles at which the stresses occur.

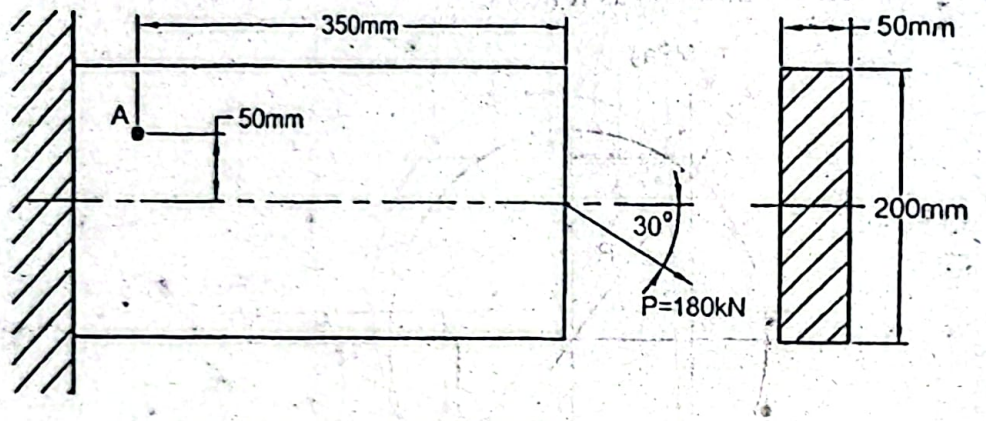

Figure P8.32

Given Data:

Load, $P = 180kN$

Depth of beam section, $h = 200mm$

Width of beam section, $b = 50mm$

To Find:

- Principal stresses at point A, σ_1 and σ_2
- Maximum shearing stress at point A, τ_{max}
- Angles. θ and θ_s

Solution:

Horizontal component of the force, $P_h = P\cos 30^0 = 180\cos 30^0 = 155.885kN$

Vertical component of the force, $P_v = P\sin 30^0 = 180\sin 30^0 = 90kN$

Bending stress at the point A, $$\sigma_b = \frac{Mc}{I} = \frac{P_v \times 350 \times 50}{\frac{I}{12} \times 50 \times 200^3}$$

$$= \frac{90 \times 10^3 \times 350 \times 50}{\frac{I}{12} \times 50 \times 200^3} MPa = 47.25MPa$$

Axial tensile stress at the point A, $\sigma_t = \frac{P_h}{A} = \frac{155.885 \times 10^3}{50 \times 200} MPa = 15.59MPa$

Therefore, the total normal stress at the point A,

$$\sigma_x = \sigma_b + \sigma_t = (47.25 + 15.59) MPa = 62.84MPa$$

Shearing stress at the point A, $\tau_{xy} = \frac{VQ}{Ib}$

To find the value of Q, a section is taken as follows.

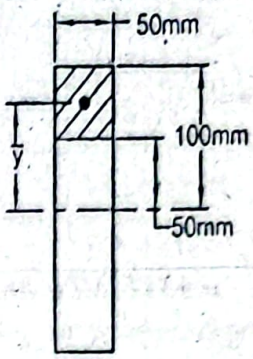

Now, $Q = \bar{y}A = 75 \times 50 \times 50$ and $V = P_v = 90kN$

Therefore, $$\tau = \frac{90 \times 10^3 \times 75 \times 50 \times 50}{\frac{1}{12} \times 50 \times 200^3 \times 50} MPa = 10.13MPa$$

Mohr's circle of these stresses at the point A is shown below.

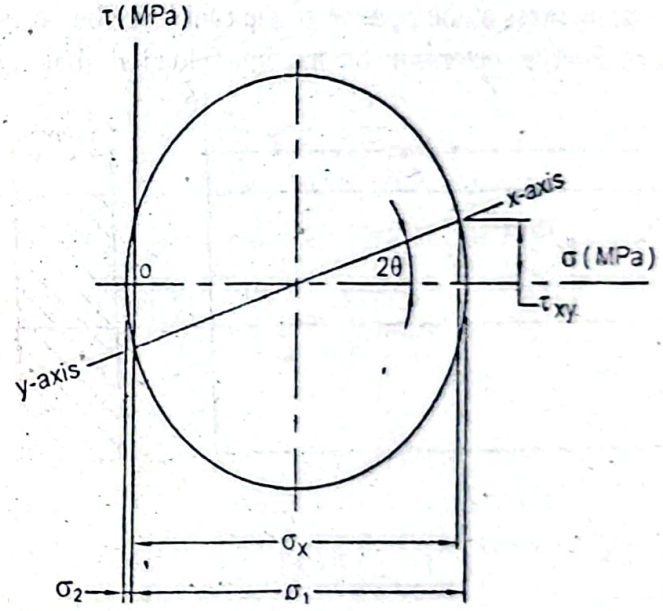

Principal stresses, $$\sigma_1, \sigma_2 = \frac{\sigma_x}{2} \pm \sqrt{\left(\frac{\sigma_x}{2}\right)^2 + \tau_w^2}$$

$$= \frac{62.84}{2} \pm \sqrt{\left(\frac{62.84}{2}\right)^2 + (10.13)^2}$$

$$= (31.42 \pm 33.01)MPa$$

Therefore, $\sigma_1 = 64.43MPa$ **Answer**

and $\sigma_2 = -1.59MPa$ **Answer**

Angles at which principal stresses occur,

$$\tan 2\theta = \frac{2\tau_w}{\sigma_x} = \frac{2 \times 10.13}{62.84}$$

or, $2\theta = 17.87^0, 197.87^0$

$$\text{or, } \theta = 8.94^0, 98.94^0 \text{ Answer}$$

Maximum shearing stress, $$\tau_{max} = \sqrt{\left(\frac{\sigma_x}{2}\right)^2 + \tau_{xy}^2}$$

$$= \sqrt{\left(\frac{62.84}{2}\right)^2 + (10.13)^2}$$

$$= \pm 33.01 MPa \text{ Answer}$$

Angles at which maximum shearing stresses occur,

$$\tan 2\theta_s = -\frac{\sigma_x}{2\tau_{xy}} = -\frac{62.84}{2 \times 10.13}$$

$$\text{or, } 2\theta_s = -72.13^0, 107.87^0$$

That is, $$\theta_s = -36.07^0, 126.07^0 \text{ Answer}$$

Problem P8.33:

If the maximum shearing stress at the point A of the cantilever beam as shown in Figure P8.33 is not to exceed $20MPa$, determine the maximum load P that can be applied.

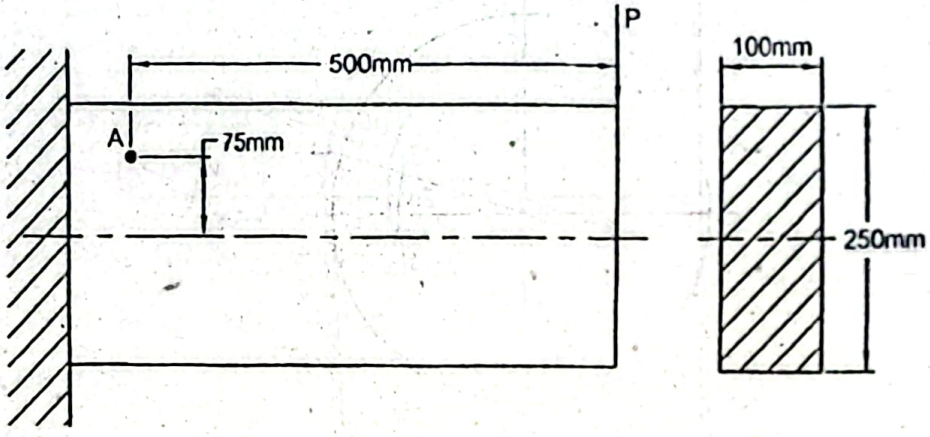

Figure P8.33

Given Data:

Maximum shearing stress, $\tau_{max} = 20MPa$

Beam depth, $h = 250mm$

Beam width, $b = 100mm$

To Find:

- Maximum load applied, P

Solution:

Let the load P is in kN.

Bending stress, $$\sigma_b = \sigma_x = \frac{Mc}{I} = \frac{P \times 10^3 \times 500 \times 75}{\frac{1}{12} \times 100 \times 250^3} = 0.288P \ MPa$$

Shearing stress, $$\tau = \tau_{xy} = \frac{VQ}{Ib}$$

To find the value of Q a section is taken as follows.

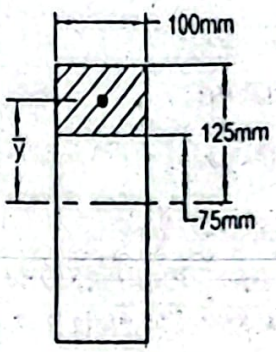

Here, $Q = \bar{y}A = 100 \times 100 \times 50 = 5 \times 10^5$

Shear force, $V = P\,kN$

Therefore, $$\tau_{xy} = \frac{P \times 10^3 \times 5 \times 10^5}{\frac{1}{12} \times 100 \times 250^3 \times 100}$$

$$= 0.0384P\ MPa$$

Maximum shearing stress, $$\tau_{xy} = \sqrt{\left(\frac{\sigma_x}{2}\right)^2 + \tau_{xy}^2}$$

or, $$20 = \sqrt{\left(\frac{0.288P}{2}\right)^2 + (0.0384P)^2}$$

or, $P = 134.2kN$ *Answer*

Problem P8.34:

If the maximum principal stress at the point A of the cantilever beam as shown in Figure P8.34 is not to exceed $50MPa$, determine the maximum load P that the cantilever beam can support. The point A is just below the flange of the beam section. The vertical load P is assumed to pass through the center of the beam section.

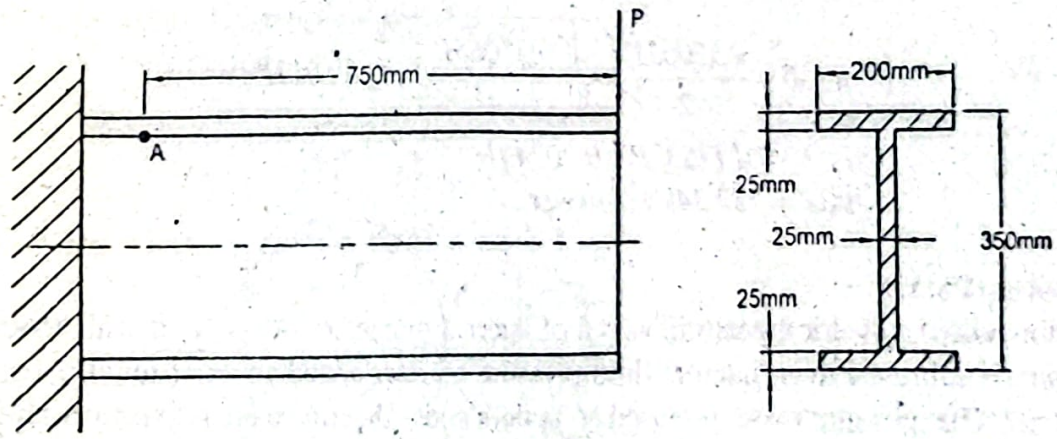

Figure P8.34

Given Data:

Limiting principal stress, $\sigma_l = 50MPa$

To Find:

- Maximum load, P

Solution:

Let P be the load is in kN.

Moment of inertia of the beam section,

$$I = \frac{1}{12}\left[200\times350^3 - 175\times300^3\right]$$

$$= 320,833,333.3mm^4$$

Bending stress at A, $\sigma_x = \sigma_b = \frac{Mc}{I} = \frac{P\times10^3\times750\times150}{320,833,333.3}$ (Here $c = 150mm$)

$$= 0.35065P\ MPa$$

Shearing stress, $\tau = \frac{VQ}{Ib}$

To find the value of Q a section is taken as follows.

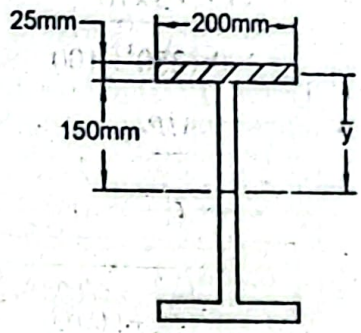

Now, $Q = \bar{y}A = (150+12.5)\times(200\times25)mm^3 = 812500mm^3$

Here, $V = P\ kN$

Therefore, $\tau = \frac{P\times10^3\times812500}{320833333.3\times25}MPa = 0.1013P\,MPa$

Principal stress, $\sigma_1 = \frac{\sigma_x}{2} + \sqrt{\left(\frac{\sigma_x}{2}\right)^2 + \tau^2}$

or, $50 = \frac{0.35065P}{2} + \sqrt{\left(\frac{0.35065P}{2}\right)^2 + (0.1013P)^2}$

or, $50 = 0.17533P + 0.20249P$

or, $P = 132.34kN$ ***Answer***

Problem P8.35:

A thin-walled cylindrical pressure vessel of internal diameter $500mm$ and wall thickness $10mm$ is subjected to an internal fluid pressure of $2MPa$ and an axial tensile force of $25\pi\ kN$. The pressure vessel is closed at its both ends. Determine the maximum shearing stress and the maximum normal stress on the wall of the pressure vessel.

Given Data:

Internal diameter, $d_i = 500mm$

Wall thickness, $t = 10mm$

Internal fluid pressure, $p_i = 2MPa$

Axial tensile force, $P = 25\pi\, kN$

To Find:

Maximum shearing stress, τ_{max}

Maximum normal stress, σ_1

Solution:

Since the ends of the vessel are closed a longitudinal stress due to the internal fluid pressure is developed.

Longitudinal stress, $$\sigma_l = \frac{p_i d_i}{4t} = \frac{2\times 500}{4\times 10} = 25MPa$$

Tensile stress due to the axial force, $$\sigma_{la} = \frac{P}{\pi d_i t} = \frac{25\pi\times 10^3}{\pi\times 500\times 10} MPa = 5MPa$$

Therefore, the total axial stress, $$\sigma_x = (\sigma_l + \sigma_{la}) = (25+5)MPa = 30MPa$$

Tangential stress, $$\sigma_t = \frac{p_i d_i}{2t} = \frac{2\times 500}{2\times 10} MPa = 50MPa$$

Omitting the radial stress for a thin-walled cylindrical pressure vessel, the stress element becomes,

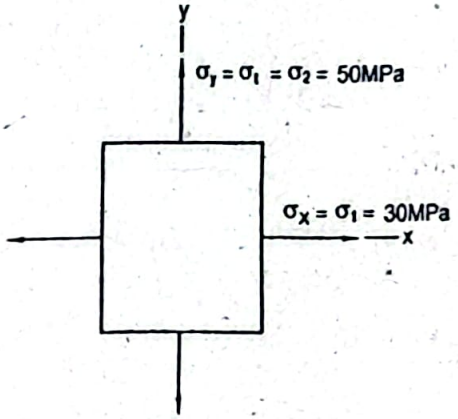

Mohr's circle for this stress element is given below.

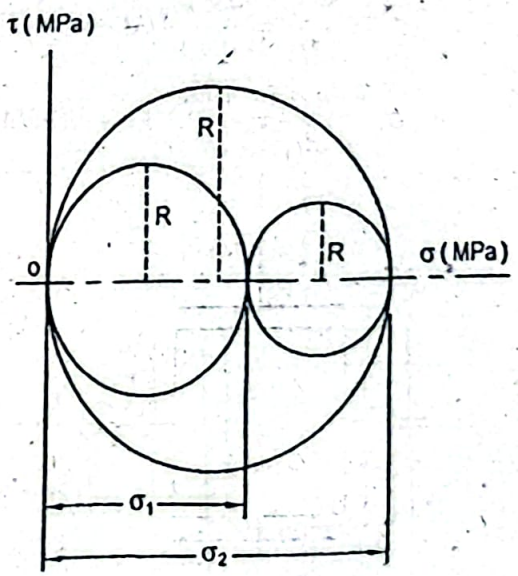

To find the absolute maximum shearing stress,

$$\tau_{max} = \frac{|\sigma_1 - \sigma_2|}{2} = \frac{|30-50|}{2} = 10MPa$$

$$\tau_{max} = \frac{|\sigma_1|}{2} = \frac{|30|}{2} = 15MPa$$

$$\tau_{max} = \frac{|\sigma_2|}{2} = \frac{|50|}{2} = 25MPa$$

Therefore, the required maximum shearing stress,

$$\tau_{max} = 25MPa \text{ Answer}$$

and maximum normal stress, $\sigma_1 = 50MPa$ Answer

Problem P8.36:

A closed end cylindrical pressure vessel of internal diameter $400mm$ and wall thick $10mm$ is subjected to an internal fluid pressure of $4MPa$. Determine the maxir torque that can be applied simultaneously if the allowable normal stress $\sigma_a \leq 100$ and the allowable shearing stress $\tau_a \leq 50MPa$. Neglect the possibility of any buck effect.

Given Data:

Internal diameter, $d_i = 400mm$

Wall thickness, $t = 10mm$

Internal fluid pressure, $p_i = 4MPa$

Allowable normal stress, $\sigma_a \leq 100MPa$

Allowable shearing stress, $\tau_a \leq 50MPa$

To Find:

- Maximum torque applied, T

Solution:

Tangential stress, $$\sigma_1 = \frac{p_i d_i}{2t} = \frac{4 \times 400}{2 \times 10} MPa = 80MPa$$

Longitudinal stress, $$\sigma_l = \frac{p_i d_i}{4t} = \frac{4 \times 400}{4 \times 10} MPa = 40MPa$$

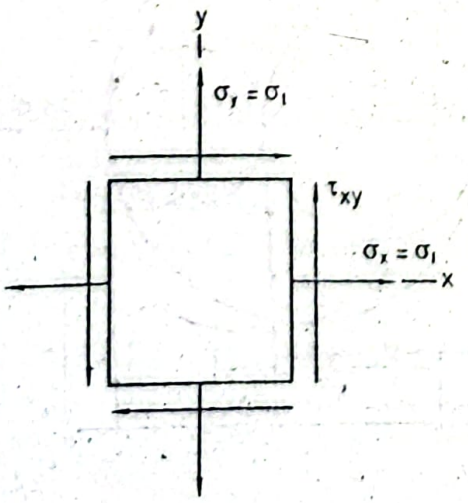

τ_{xy} is the shearing stress due to the torque.

mitting the radial stress for a thin-walled cylindrical pressure vessel, the stress element
top surface of the cylinder is shown in the above figure.
ohr's circle for this stress element is shown below.

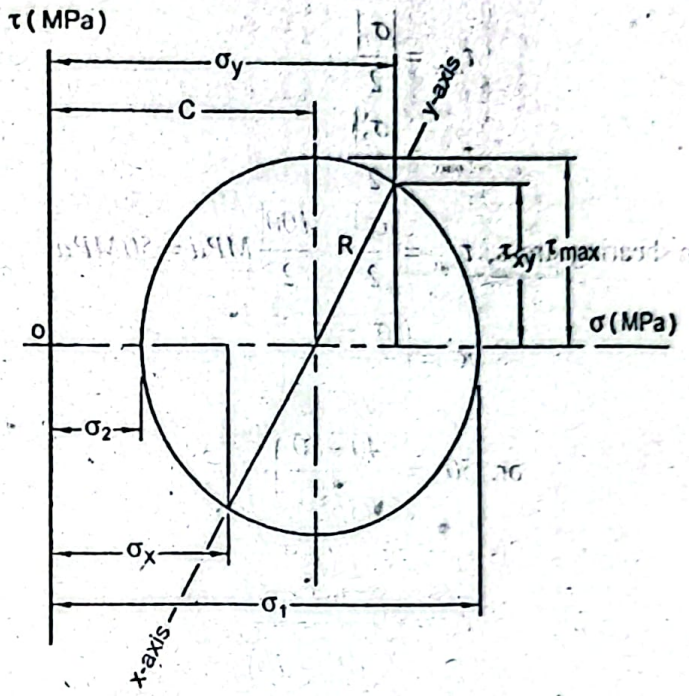

istance between the τ -axis and the center of Mohr's circle,

$$C = \frac{\sigma_x + \sigma_y}{2} = \frac{40+80}{2} MPa = 60MPa$$

onsidering the allowable normal stress,

$$\sigma_1 = \sigma_a = 100MPa$$

dius of Mohr's circle,

$$R = \sigma_1 - C = (100-60)MPa = 40MPa$$

om Mohr's circle,

$$R^2 = \left(\frac{\sigma_x - \sigma_y}{2}\right)^2 + \tau_{xy}^2$$

$$\text{or, } 40^2 = \left(\frac{40-80}{2}\right)^2 + \tau_{xy}^2$$

$$\text{or, } \tau_{xy} = 34.64MPa$$

e have,

$$\tau_{xy} = \frac{Tc}{J} = \frac{16T}{\frac{\pi}{32}\left(d_o^4 - d_i^4\right)}$$

$$\text{or, } 34.64 = \frac{16 \times T}{\frac{\pi}{32}\left(420^4 - 400^4\right)}$$

nce $d_o = d_i + 2t = 400 + 2 \times 10 = 420mm$)

$$\text{or, } T = 1172.62kNm$$

Now considering the allowable shearing stress, the maximum shearing stress ca written as,

$$\tau_{max} = \frac{|\sigma_1 - \sigma_2|}{2}$$

$$\tau_{max} = \frac{|\sigma_1|}{2}$$

$$\tau_{max} = \frac{|\sigma_2|}{2}$$

Here the maximum shearing stress, $\tau_{max} = \frac{|\sigma_1|}{2} = \frac{|100|}{2} MPa = 50MPa$

We have, $$R^2 = \left(\frac{\sigma_x - \sigma_y}{2}\right)^2 + \tau_{xy}^2$$

$$\text{or, } 50^2 = \left(\frac{40-80}{2}\right)^2 + \tau_{xy}^2$$

$$\text{or, } \tau_{xy} = 45.83MPa$$

We also have, $$\tau_{xy} = \frac{16T}{\frac{\pi}{32}\left(d_o^4 - d_i^4\right)}$$

$$\text{or, } 45.83 = \frac{16 \times T}{\frac{\pi}{32}\left(420^4 - 400^4\right)}$$

$$\text{or, } T = 1551.42kNmkNm$$

Therefore, the required maximum torque that can be applied,

$$T = 1172.62kNm \text{ Answer}$$

Problem P8.37:

A closed end cylindrical pressure vessel of internal diameter $500mm$ and wall thickn $10mm$ is subjected to an internal fluid pressure of $2.5MPa$, a bending moment $100kNm$ and a torque of $200kNm$ together. Determine the maximum normal stress a the maximum shearing stress, neglecting the possibility of any buckling effect.

Given Data:

Internal diameter, $d_i = 500mm$

Wall thickness, $t = 10mm$

Internal fluid pressure, $p_i = 2.5MPa$

Bending moment, $M = 100kNm$

Torque, $T = 200kNm$

To Find:

- Maximum normal stress, σ_1
- Maximum shearing stress, τ_{max}

Solution:

Tangential stress, $\sigma_t = \frac{p_i d_i}{2t} = \frac{2.5 \times 500}{2 \times 10} MPa = 62.5MPa$

Longitudinal stress, $\sigma_l = \frac{p_i d_i}{4t} = \frac{2.5 \times 500}{4 \times 10} MPa = 31.25MPa$

Bending moment, $\sigma_b = \frac{Mc}{I} = \frac{32M}{\frac{\pi}{64}\left(d_o^4 - d_i^4\right)}$

$$= \frac{32 \times 100 \times 10^6}{\frac{\pi}{64}\left(520^4 - 500^4\right)} MPa$$

$$= 6.14MPa$$

(Since $d_o = d_i + 2 \times t = (500 + 2 \times 10)mm = 520mm$)

Shearing stress, $\tau = \frac{Tc}{J} = \frac{16T}{\frac{\pi}{32}\left(d_o^4 - d_i^4\right)}$

$$= \frac{16 \times 200 \times 10^6}{\frac{\pi}{32}\left(520^4 - 500^4\right)} MPa$$

$$= 3.07MPa$$

Neglecting the radial stress for a thin walled pressure vessel and considering a stress element on top surface of the pressure vessel, the stresses are,

$$\sigma_x = (\sigma_l + \sigma_b)$$

$$= (31.25 + 6.14)MPa = 37.39MPa$$

$$\sigma_y = \sigma_t = 62.5MPa$$

$$\tau_{xy} = \tau = 3.07MPa$$

Stress element for these stresses is as follows.

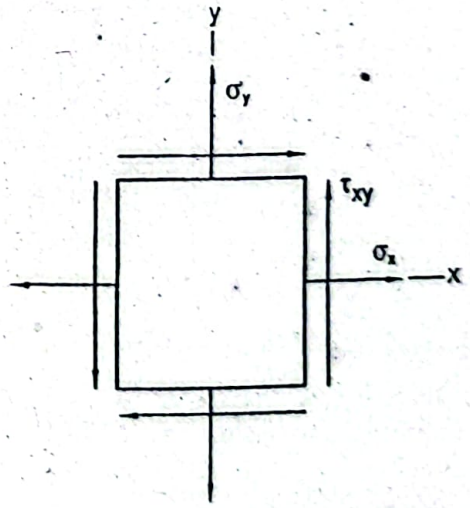

Mohr's circle of this stress element is given below.

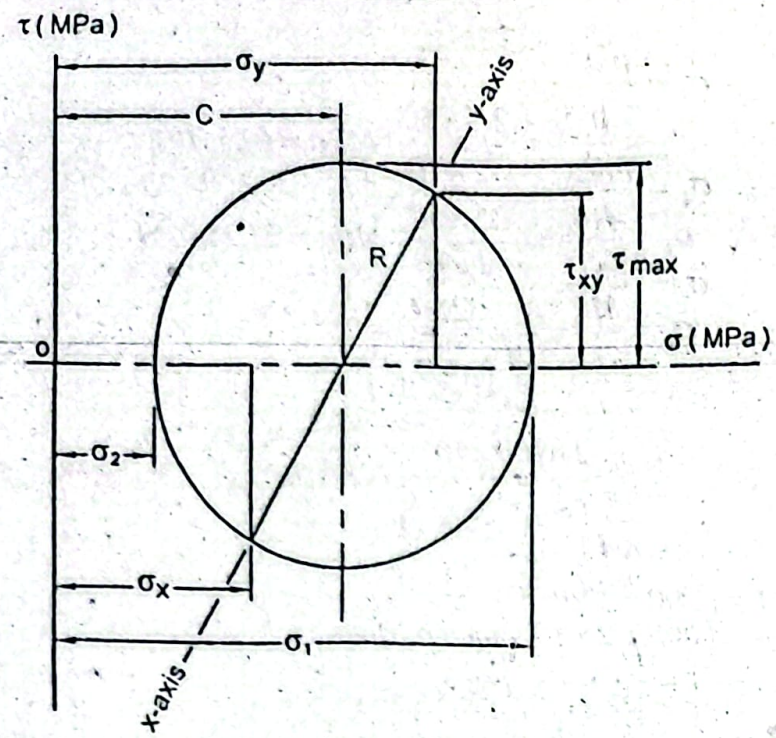

Distance between the center of Mohr's circle and the τ -axis,

$$C = \frac{\sigma_x + \sigma_y}{2} = \frac{37.39 + 62.5}{2} MPa = 49.95MPa$$

Radius of Mohr's circle, $R = \sqrt{\left(\frac{\sigma_x - \sigma_y}{2}\right)^2 + \tau_{xy}^2}$

$$= \sqrt{\left(\frac{37.39 - 62.5}{2}\right)^2 + (3.07)^2}$$

$$= 12.93MPa$$

Therefore, the maximum normal stress,

$$\sigma_1 = C + R = (49.95 + 12.93) MPa = 62.88MPa \ \textit{Answer}$$

Now to find the maximum shearing stress, the absolute maximum shearing stresses are obtained as,

$$\tau_{max} = \frac{|\sigma_1 - \sigma_2|}{2}$$

$$\tau_{max} = \frac{|\sigma_1|}{2}$$

$$\tau_{max} = \frac{|\sigma_2|}{2}$$

Here the absolute maximum shearing stress,

$$\tau_{max} = \frac{|\sigma_1|}{2} = \frac{|62.88|}{2} MPa = 31.44MPa$$

Therefore, the required maximum shearing stress,

$$\tau_{max} = 31.44MPa \ \textit{Answer}$$

Problem P8.38:

A closed-end cylindrical pressure vessel fabricated from *12mm* plate is subjected to an internal fluid pressure of *2.4MPa*. If the maximum normal stress and the maximum shearing stress are not to exceed *100MPa* and *50MPa* respectively, determine the maximum diameter of the pressure vessel.

Given Data:

Wall thickness, $t = 12mm$

Internal fluid pressure, $p_i = 2.5MPa$

Allowable normal stress, $\sigma_a = 100MPa$

Allowable shearing stress, $\tau_a = 50MPa$

To Find:

- Maximum diameter, d

Solution:

Let us consider $d_i = d$ for a thin walled cylinder.

Tangential stress, $$\sigma_t = \frac{p_i d_i}{2t} = \frac{2.4 \times d_i}{2 \times 12} = 0.1 d_i \, MPa$$

Longitudinal stress, $$\sigma_l = \frac{p_i d_i}{4t} = \frac{2.4 \times d_i}{4 \times 12} = 0.05 d_i \, MPa$$

Omitting the radial stress for a thin walled cylindrical pressure vessel, the stress element on the wall is as follows.

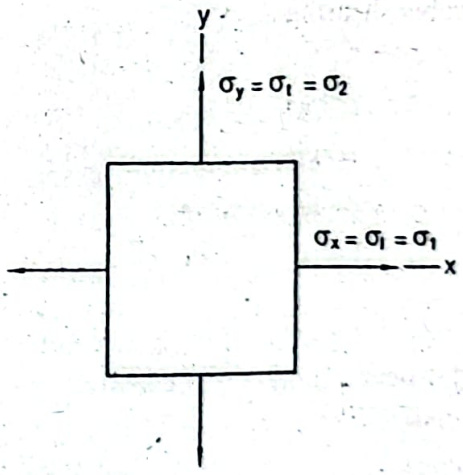

Mohr's circle of this element is shown below.

Considering the allowable normal stress,

$$\sigma_2 = \sigma_a = 100MPa$$

or, $0.1 d_i = 100$

or, $d_i = 1000mm$

To find the absolute maximum shearing stress from Mohr's circle,

$$\tau_{max} = \frac{|\sigma_1 - \sigma_2|}{2} = \frac{|0.04 d_i - 0.1 d_i|}{2} = 0.025 d_i \, MPa$$

$$\tau_{max} = \frac{|\sigma_1|}{2} = \frac{|0.05d_i|}{2} = 0.025d_i \; MPa$$

$$\tau_{max} = \frac{|\sigma_2|}{2} = \frac{|0.1d_i|}{2} = 0.05d_i \; MPa$$

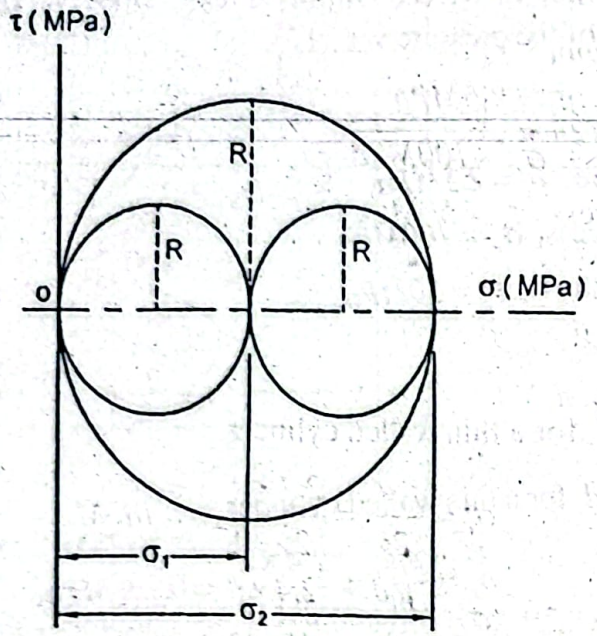

Of the three values the absolute maximum shearing stress,

$$\tau_{max} = 0.05d_i$$

Now considering the allowable shearing stress,

$$\tau_a = \tau_{max}$$

$$\text{or, } 50 = 0.05d_i$$

$$\text{or, } d_i = 1000mm$$

Therefore, the required maximum diameter of pressure vessel,

$$d = 1000mm \; \textit{Answer}$$

Problem P8.39:

Determine Poisson's ratio of steel if modulus of elasticity and modulus of rigidity of steel are respectively $200GPa$ and $79GPa$.

Given Data:

Modulus of elasticity, $E = 200GPa$

Modulus of rigidity, $G = 79GPa$

To Find:

- Poisson's ratio, ν

Solution:

We have, $$G = \frac{E}{2(1+\nu)}$$

$$\text{or, } 79 = \frac{200}{2(1+\nu)}$$

$$\text{or, } \nu = 0.266 \; \textit{Answer}$$

oblem P8.40:

etermine the strains in x and y directions of a member, which is subjected to the biaxial esses $\sigma_x = 200MPa$ and $\sigma_y = 150MPa$. Modulus of elasticity of this member $= 200GPa$ and Poisson's ratio $\nu = 0.27$

iven Data:

ormal stress in x-direction, $\sigma_x = 200MPa$

ormal stress in y-direction, $\sigma_y = 150MPa$

odulus of elasticity, $E = 200GPa$

oisson's ratio, $\nu = 0.27$

Find:

Strain in x-direction, ε_x

Strain in y-direction, ε_y

lution:

rain along the x-direction, $\varepsilon_x = \dfrac{\sigma_x}{E} - \nu\dfrac{\sigma_y}{E}$

$$= \frac{200}{200\times10^3} - 0.27\times\frac{150}{200\times10^3}$$

$$= 7.975\times10^{-4}\ mm/mm\ \textit{Answer}$$

rain along the y-direction, $\varepsilon_y = \dfrac{\sigma_y}{E} - \nu\dfrac{\sigma_x}{E}$

$$= \frac{150}{200\times10^3} - 0.27\times\frac{200}{200\times10^3}$$

$$= 4.8\times10^{-4}\ mm/mm\ \textit{Answer}$$

EXERCISES

oblem E8.1:

plane stress element in a body is subjected to a normal stress in the x-direction of $0MPa$ and a shearing stress of $40MPa$ as shown in Figure E8.1. Determine the ncipal stresses and the maximum shearing stress. Also determine the stress nponents on a plane at an angle of 30^0 (ccw) with the x-axis. Show the results on the ferential elements.

s.: $\sigma_1 = 132.11MPa; \sigma_2 = -12.11MPa; \tau_{max} = 72.11MPa; \sigma = 55.36MPa; \tau = 71.96MPa$

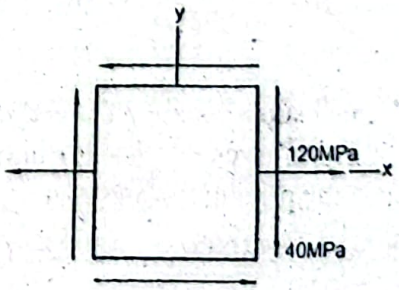

Figure E8.1

Problem E8.2:

Determine the normal and shearing stresses on a plane at an angle of 30^0 with t of the stress element as shown in Figure E8.2. Show the results on a differential e

Ans.: $\sigma = 40MPa;\ \tau = -17.$

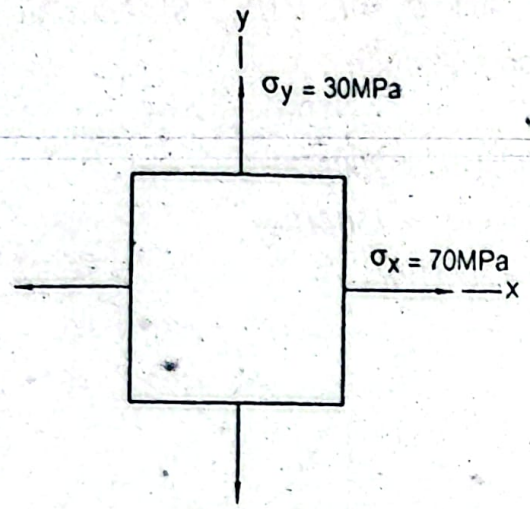

Figure E8.2

Problem E8.3:

Find the principal stresses and the maximum shearing stress for the stress elem shown in Figure E8.3. Show the results on the differential elements.

Ans.: $\sigma_1 = 136.62MPa;\ \sigma_2 = -96.62MPa;\ \tau_{max} = \pm 116.6$

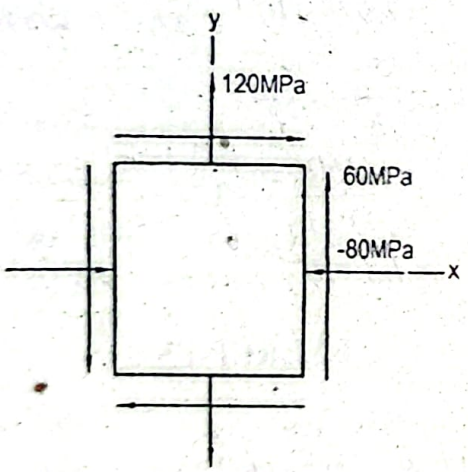

Figure E8.3

Problem E8.4:

For a state of plane stress with $\sigma_1 = 60MPa$ and $\sigma_2 = 20MPa$, determine the maxi in-plane shearing stress and the absolute maximum shearing stress.

Ans.: $\tau_{max} = \pm 20MPa;\ \tau_{max} = 30$

Problem E8.5:

A bracket ABC of diameter $50mm$ supports a load $P = 5kN$ at its free end as show Figure E8.5. Determine the principal stresses and the maximum shearing stress at point D. Find the angles at which the principal planes occur.

Ans.: $\sigma_1 = 52.98MPa;\ \sigma_2 = -12.24MPa;\ \tau_{max} = \pm 32.61MPa;\ \theta = -25.68^0, 64$

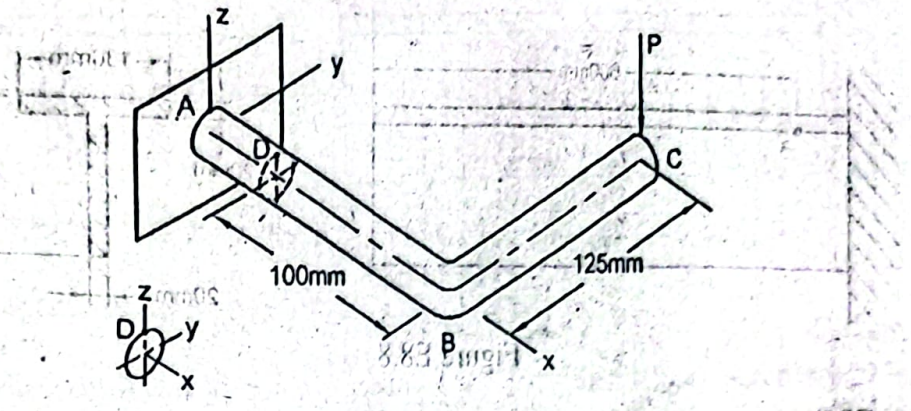

Figure E8.5

oblem E8.6:

olid circular cantilever shaft of diameter $50mm$ is subjected to a torque $T = 500Nm$, a ıcentrated load at the free end $P_1 = 20kN$ and an axial tensile load $P_2 = 50kN$ as wn in Figure E8.6. Determine the principal stresses and the maximum shearing stress he element A on the top surface of the shaft.

Ans.: $\sigma_1 = 352.59MPa;\ \sigma_2 = -1.17MPa;\ \tau_{max} = \pm 176.88MPa$

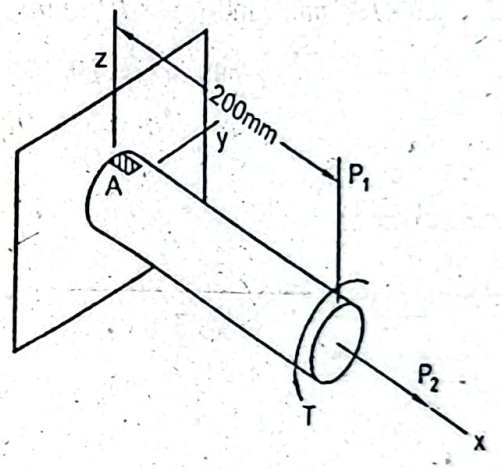

Figure E8.6

blem E8.7:

hin walled cylindrical pressure vessel with inside diameter of $800mm$ and wall kness $8mm$ contains pressurized fluid inside the cylinder at $2.5MPa$. Determine the imum torque that can be applied if the allowable shearing stress is $70MPa$. The wall ıe cylinder is braced well against buckling.

Ans.: $277.05kNm$

blem E8.8:

ıntilever beam supports a concentrated load $P = 150kN$ at its free end as shown in re E8.8. Determine the principal stresses and the maximum shearing stress at the t A just below the flange of the beam section. The load is assumed to act through the roid of the beam section.

Ans.: $\sigma_1 = 145.48MPa;\ \sigma_2 = -16.16MPa;\ \tau_{max} = 80.82MPa$

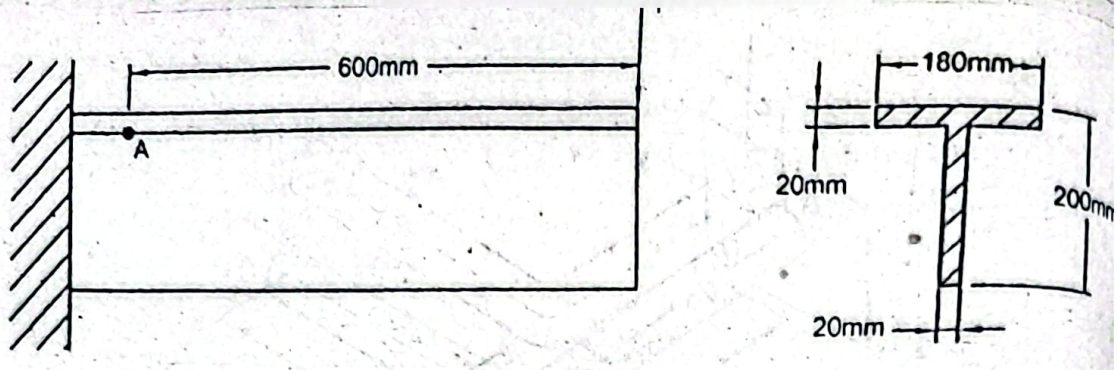

Figure E8.8

Problem E8.9:

Determine the modulus of rigidity of hard drawn copper if modulus of elastic Poisson's ratio of hard drawn copper are respectively *120GPa* and *0.5*.

Ans.: 4

Problem E8.10:

A member is subjected to the bi-axial stresses σ_x and σ_y. If modulus of elastic Poisson's ratio ν, strain along x-direction ε_x and strain along y-direction ε respectively $200GPa$, 0.27, $7.5\times10^{-4}mm$ and $5.0\times10^{-4}mm$, determine the n stresses σ_x and σ_y.

Ans.: $\sigma_x = 190.92MPa; \sigma_y = 151.5$

Chapter IX

Strain Energy and Failure Theories

Question9.1: Define strain energy? Derive a generalized expression of strain energy.

Answer:

The amount of external work done on an elastic member in deforming it, is transformed into energy, which is called the *potential* or *strain energy*. To determine the strain energy for the uniaxial stress, a differential volume element is considered as shown in Figure 9.1a. This element is subjected to a uniaxial stress σ_x along the x-direction. It is assumed that Hooke's law (i.e. load is proportional to deformation) holds good for the material.

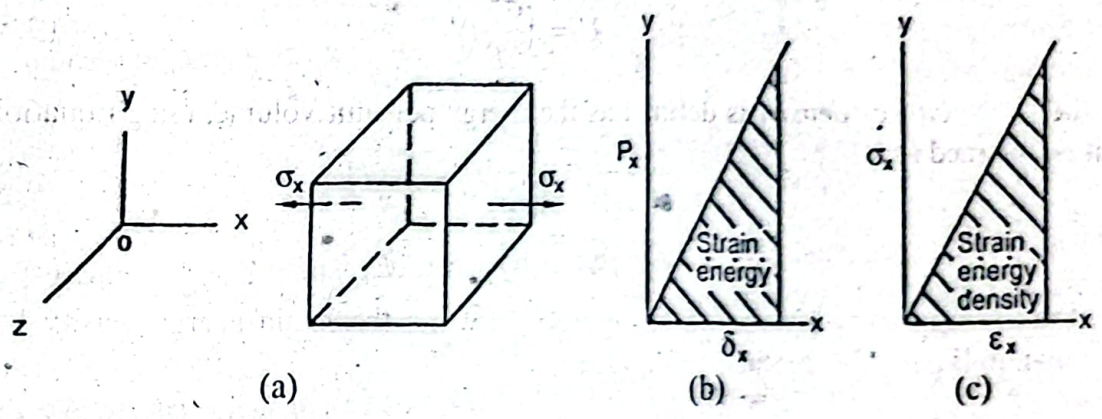

Figure 9.1: A Differential Volume Element Subjected to Uniaxial Stress.

The force acting on this element at right or left side,

$$dP_x = \sigma_x dydz$$

The elemental deformation along the x-direction,

$$d\delta_x = \varepsilon_x dx \tag{9.1}$$

where, ε_x = Strain in x-direction.

The average force acting on the element during the deformation,

$$dP_{x(av)} = \frac{\sigma_x dydz}{2} \tag{9.2}$$

Therefore, the elemental work done on the element,

$$dW = dP_{x(av)} \times d\delta_x$$

Now using Equations (9.1) and (9.2) one finds,

$$dW = \frac{1}{2}\sigma_x dydz \times \varepsilon_x dx = \frac{1}{2}\sigma_x \varepsilon_x dV \tag{9.3}$$

where, $dV = dxdydz$ = Differential volume of element.

According to the definition, the strain energy for an infinitesimal element subjected to the uniaxial stress is given by,

$$dU = dW = \frac{1}{2}\sigma_x \varepsilon_x dV \tag{9.4}$$

But we have from Hooke's law, $\varepsilon_x = \frac{\sigma_x}{E}$ where, E is the modulus of elasticity. Substituting this value in Equation (9.4),

$$dU = \frac{1}{2}\frac{\sigma_x^2}{E} dV$$

Therefore, by integrating the generalized expression of total strain energy becomes,

$$U = \int \frac{\sigma_x^2}{2E} dV \tag{9.5}$$

Since the *strain energy density* is defined as the energy per unit volume, using Equation (9.4) it is obtained as,

$$U_o = \frac{dU}{dV} = \frac{1}{2}\sigma_x \varepsilon_x = \frac{\sigma_x^2}{2E} \tag{9.6}$$

Total strain energy has been shown in Figure 9.1b while the strain energy density has been shown in Figure 9.1c by the shaded area.

Question 9.2: Define modulus of resilience. Find an expression of strain energy for an axial loading.

Answer:

The amount of strain energy up to the proportional limit is called the *modulus of resilience*. A member as shown in Figure 9.2 is subjected to an axial load P. The length and the cross-sectional area of the member are respectively L and A. Then the volume of the member,

$$\int dV = AL$$

For uniform value of $\sigma_x = \frac{P}{A}$ and constant E using Equation (9.5), the expression of the strain energy for the axial loading yields as,

$$U = \frac{\sigma_x^2}{2E}\int dV = \frac{\sigma_x^2}{2E} AL = \frac{P^2 L}{2AE} \tag{9.7}$$

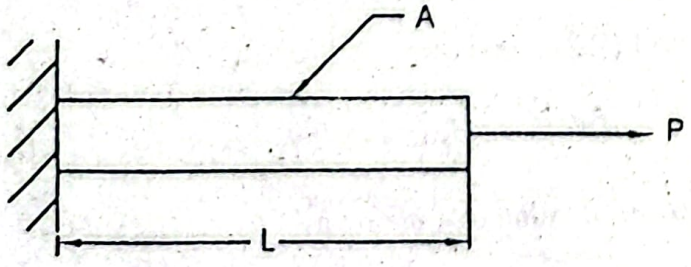

Figure 9.2: A Member Subjected to Axial Loading.

Question 9.3: Obtain an expression of strain energy for pure bending.

Answer:

An elemental segment of a beam of length dx is shown in Figure 9.3. Before application of the bending moment the planes ab and cd were parallel. After application of the bending moment the planes rotate and make an angle $d\theta$ with the center of curvature of the elastic curve, whose radius is denoted by ρ. The full value of the bending moment is attained gradually, as a result the average moment acting through an angle $d\theta$ is $\frac{1}{2}M$.

Hence the external work done on the elemental segment of beam,

$$dW = \frac{1}{2}Md\theta \tag{9.8}$$

The elemental length of beam, $dx \approx \rho d\theta$ and we have from Equation (4.10),

$$\frac{1}{\rho} = \frac{M}{EI} \tag{4.10}$$

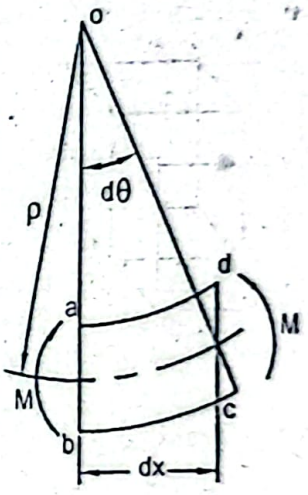

Figure 9.3: An Elemental Segment of a Beam Subjected to Bending Moment.

Therefore, the expression of the strain energy is obtained as,

$$dU = dW = \frac{1}{2}Md\theta = \frac{1}{2}M\frac{dx}{\rho} = \frac{1}{2}\frac{M^2}{EI}dx$$

Now integrating, the total strain energy for pure bending is found as,

$$U = \int \frac{M^2}{2EI}dx \tag{9.9}$$

Question 9.4: Find an expression of strain energy for shear.

Answer:

A differential cubical volume element is subjected to two-dimensional shearing stresses as shown in Figure 9.4a. The element after deformation due to shear is shown in Figure 9.4b. The force on the top surface of the element due to the shearing stress is $\tau dxdz$,

where, τ being the shearing stress. For small deformation of the element, the l displacement due to this shear force is γdy. Therefore, the elemental strain ene becomes.

$$dU = \frac{1}{2}\tau dx dz \times \gamma dy = \frac{1}{2}\tau\gamma dV \tag{9.}$$

Since we have $\gamma = \frac{\tau}{G}$, where G is the modulus of rigidity, therefore, Equation (4. becomes.

$$dU = \frac{1}{2}\frac{\tau^2}{G}dV \tag{9.}$$

Now by integrating Equation (9:11) the expression of the total strain energy for shea obtained as.

$$U = \int \frac{\tau^2}{2G}dV \tag{9.1}$$

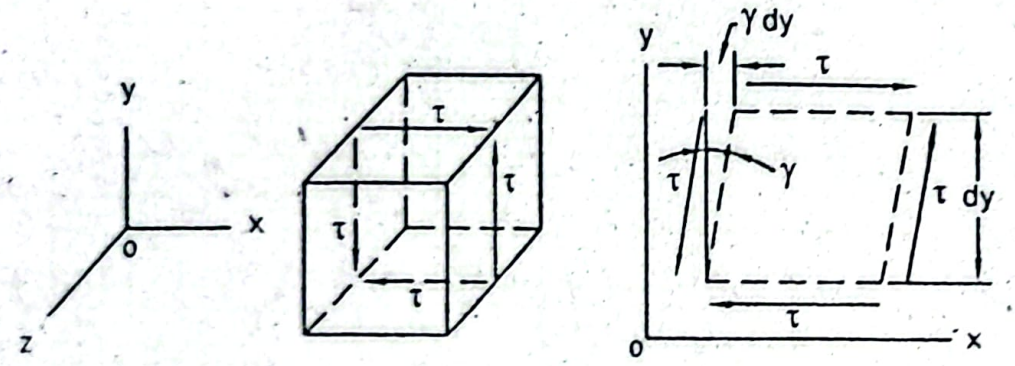

(a) (b)

Figure 9.4: A Differential Cubical Element Subjected to Shear.

Question 9.5: Discuss Castigliano's theorem.

Answer:

When an elastic structure is subjected to the loads $P_1, P_2, \ldots\ldots P_n$ at the different location the deflection δ_i at the point of application of the load P_i along the line of action of P_i equal to the partial derivative of the total strain energy with respect to that forc Mathematically.

$$\delta_i = \frac{\partial U}{\partial P_i} \tag{9.1}$$

Castigliano's theorem can also be applied to find the deflection at a point where there no force or moment. A fictitious force Q_i is assumed to act at that point; then the parti derivative of the total strain energy is taken with respect to that fictitious force Q_i Mathematically.

$$\delta_i = \frac{\partial U}{\partial Q_i} \tag{9.14}$$

After finding the solution Q_i is set to zero. Castigliano's theorem was stated by an Italian Engineer Alberto Castigliano (1847-1884). This theorem is the most useful but offers simple approach to find deflection. This theorem can also be applied to find reactions of an indeterminate structure.

Castigliano's theorem can be used to determine the slope of a beam θ_i, at the point of application of the couple M_i by taking the partial derivative of the total strain energy with respect to the moment M_i. Mathematically,

$$\theta_i = \frac{\partial U}{\partial M_i} \tag{9.15}$$

To find the angle of twist ϕ_i in a section of a shaft at the point of application of T_i, Castigliano's theorem can be applied. Mathematically,

$$\phi_i = \frac{\partial U}{\partial T_i} \tag{9.16}$$

Question 9.6: Give a short note on failure theories.

Answer:

Every material has one value of strength in tension, compression and shear. When the stress due to the external load in any member exceeds this strength, failure of the member occurs. This failure of the member is detected by either yielding or fracture. Failure theories predict the failure point of the member. When the member undergoes a uniaxial stress, failure point can be predicted easily, but when the member undergoes loads from many directions, prediction of failure point becomes a bit complicated. However, failure theories can deal with predicting the failure point of both the uniaxial stress that is, simple stress as well as the biaxial and triaxial stresses due to multidirectional loads.

Question 9.7: Discuss about maximum normal stress theory.

Answer:

In about 1850 W. J. M. Rankine established the maximum normal stress theory. This theory states that *failure occurs when the largest principal stress equals the strength* in uni-axial tension at yielding. If for any stress element the principal stresses are in the order of,

$$\sigma_1 > \sigma_2 > \sigma_3 \tag{9.17}$$

Then this theory predicts that failure occurs when,

$$\sigma_1 = S_t \text{ or, } \sigma_3 = S_c \tag{9.18}$$

where, S_t and S_c are respectively the tensile and compressive strength and they may be either the yield or ultimate strength.

In Figure 9.5 a graph of the maximum normal stress theory of failure for bi-axial stress element with $|S_c| > S_t$ has been shown. The safe area is within the graph. For $|S_c| = S_t$, the point o moves to the center of a square.

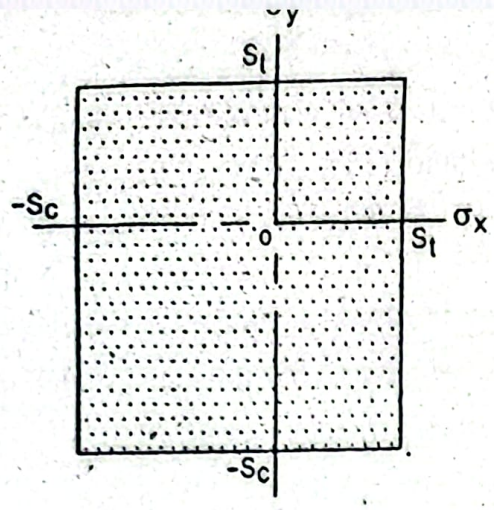

Figure 9.5: A Graph of Normal Maximum Stress Theory of Failure for Bi-axia Element.

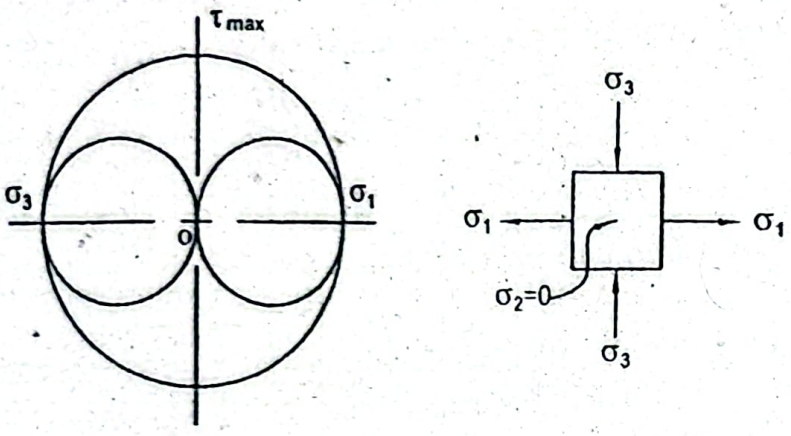

(a) (b)

Figure 9.6: Mohr's Circle for a Pure Torsion Element.

From the correlation of the experimental data it is seen that the maximum normal theory gives good prediction for the brittle material, therefore it is used for the b materials. For the ductile materials this theory is not recommended. For a pure to element Mohr's circle is shown in Figure 9.6a and an element including the prin stresses from the pure torsion member is shown in Figure 9.6b. It is observed from figure that $\sigma_1 = \tau_{max} = |\sigma_3|$, σ_2 being zero. For the ductile materials the she strength is lower than the tensile strength (shearing yield strength S_{s_y} is about 0.6 t the yield strength S_y), as a result for a pure torsion member of ductile material, fa occurs by shear before yield strength is reached. Therefore, the maximum normal s theory is not recommended to predict the failure of the ductile materials.

Question 9.8: Discuss about maximum shear stress theory.

Answer:

J. J. Guest established the maximum shear stress theory; however, others also propose independently. Maximum shear stress theory states that *yielding begins whenever maximum shear stress in any mechanical element becomes equal to the shear stress i tension test specimen of the same material when that specimen begins to yield.*

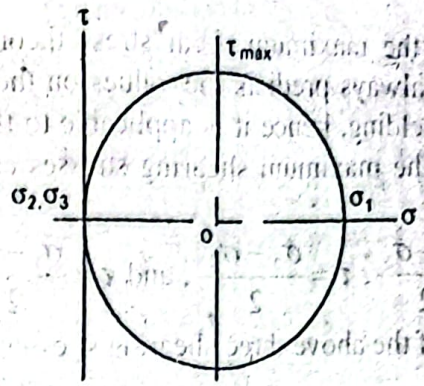

Figure 9.7: Mohr's Circle for Simple Tension Test Specimen.

re 9.7 shows Mohr's circle for a simple tension test specimen. From the figure the imum shearing stress is found as,

$$\tau_{max} = \frac{\sigma_1}{2} \tag{9.19}$$

pure torsion from Mohr's circle (Figure 9.6a), the maximum shearing stress is ined as,

$$\tau_{max} = \frac{\sigma_1 - \sigma_3}{2} \tag{9.20}$$

e we have assumed that the principal stresses are arranged in the order $\sigma_1 > \sigma_2 >$ therefore, from Equations (9.19) and (9.20), the maximum shear stress theory cts that failure occurs whenever,

$$\tau_{max} = \frac{S_y}{2} \text{ or, } \sigma_1 - \sigma_3 = S_y \tag{9.21}$$

theory also states that the shear yield strength,

$$S_{s_y} = \frac{S_y}{2} = 0.5 S_y \tag{9.22}$$

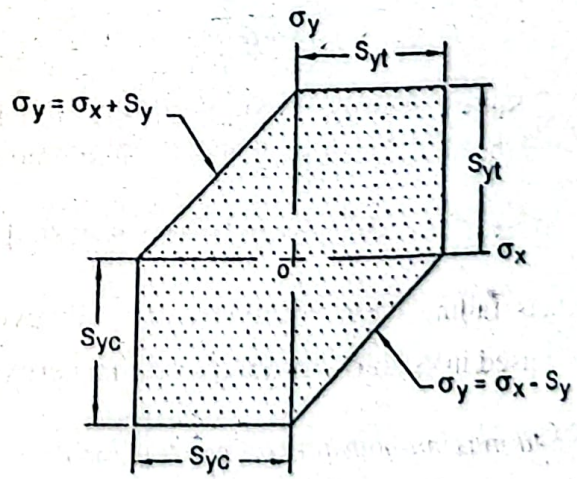

Figure 9.8: A Graph of Maximum Shear Stress Theory of Failure.

Figure 9.8 shows a graph of the maximum shear stress theory where area wi boundary is safe. This theory always predicts the values on the safe side of tes Since this theory deals with yielding, hence it is applicable to the ductile materi For a triaxial stress element, the maximum shearing stresses can be obtained u following expressions,

$$\tau = \frac{\sigma_1 - \sigma_2}{2}, \quad \tau = \frac{\sigma_2 - \sigma_3}{2}, \text{ and } \tau = \frac{\sigma_1 - \sigma_3}{2}$$

Failure occurs when any one of the above three shearing stresses equals $\tau_{max} = 0.5$

Question 9.9: Discuss about maximum strain energy theory.

Answer:

Maximum strain energy theory predicts that *failure by yielding occurs when th strain energy in a unit volume reaches or exceeds the strain energy in the same corresponding to the yield strength in uni-axial tension or compression.*

Using Equation (9.6) the strain energy stored in a unit volume when stressed uni up to the yield strength, is obtained as,

$$U_y = \frac{S_y^2}{2E}$$

Following Equation (9.6) the total strain energy in a unit volume subjected to the stress-strain is found as,

$$U = \left(\frac{\sigma_1 \varepsilon_1}{2} + \frac{\sigma_2 \varepsilon_2}{2} + \frac{\sigma_3 \varepsilon_3}{2} \right)$$

From the theory of elasticity the relations of the principal strains are obtained as,

$$\varepsilon_1 = \frac{\sigma_1}{E} - \frac{\nu\sigma_2}{E} - \frac{\nu\sigma_3}{E}$$

$$\varepsilon_2 = \frac{\sigma_2}{E} - \frac{\nu\sigma_1}{E} - \frac{\nu\sigma_3}{E}$$

$$\varepsilon_3 = \frac{\sigma_3}{E} - \frac{\nu\sigma_1}{E} - \frac{\nu\sigma_2}{E}$$

where, ν = Poisson's ratio. Substituting these values of strains in Equation (9.25 simplifying, the expression of the total strain energy in a unit volume is found as,

$$U = \frac{1}{2E}\left[\left(\sigma_1^2 + \sigma_2^2 + \sigma_3^2\right) - 2\nu\left(\sigma_1\sigma_2 + \sigma_2\sigma_3 + \sigma_3\sigma_1\right)\right]$$

Strain energy theory predicts failure when U equals U_y. However, this theory more used but its concept is used in establishing the distortion energy theory.

Question 9.10: Discuss about maximum distortion energy theory.

Answer:

Maximum distortion energy theory predicts that *yielding will occur whenever the distortion energy in a unit volume equals the distortion energy in the same volume when uniaxially stressed to the yield strength.*

It has been found from investigation that when a member of ductile material is stressed hydrostatically, yield strength becomes greater than that in a simple tensile test; which implies that, yielding is not a simple tensile or compressive phenomenon. It has a relation with angular distortion of a stress element. From the outcome of this investigation, the distortion energy theory has been established.

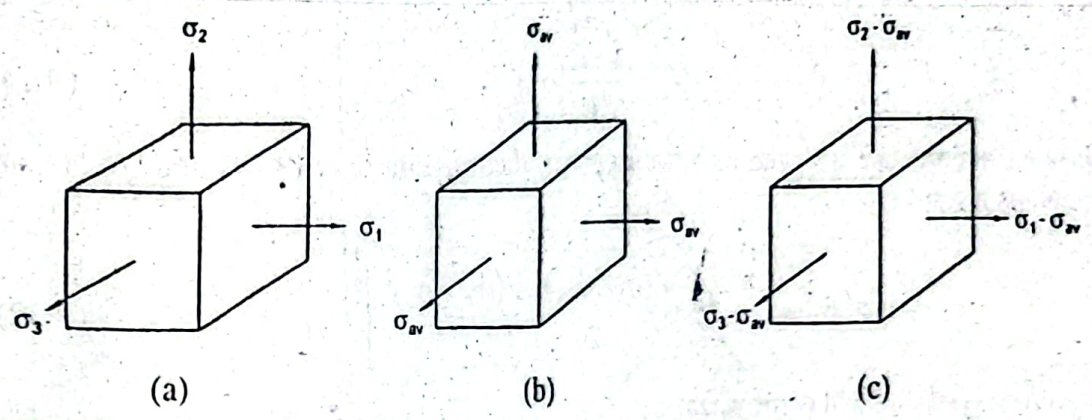

Figure 9.9: (a) A Triaxial Stress Element undergoes both volume change and Angular Distortion (b) An Element undergoes Volume Change only (c) An Element yields Angular Distortion without Volume Change.

In Figure 9.9a a triaxial stress element is shown. This element undergoes both volume change and angular distortion. Figure 9.9b shows an element which is under the action of hydrostatic tension due to the average stresses σ_{av}. It undergoes only volume change with no angular distortion, because the stresses in all directions of this element are same. On the other hand, the element as shown in Figure 9.9c yields only the angular distortion without any volume change. As a result the total strain energy of the element shown by Figure 9.9a is the algebraic sum of the strain energy of the elements shown in Figures 9.9b and 9.9c. Now to determine the strain energy of the element which yields only the volume change, the average of the principal stresses are considered as,

$$\sigma_{av} = \frac{\sigma_1 + \sigma_2 + \sigma_3}{3} \tag{9.27}$$

Subtracting σ_{av} from the principal stresses σ_1, σ_2 and σ_3, the remainder of the stresses are applied to the element shown in Figure 9.9c and they make only pure angular distortion of this element. Writing σ_{av} in place of σ_1, σ_2 and σ_3, in Equation (9.26) and simplifying, the amount of strain energy making the volume change only is obtained as,

$$U_v = \frac{1}{2E}\left[3\sigma_{av}^2 - 2\nu \times 3\sigma_{av}^2\right] = \frac{3\sigma_{av}^2}{2E}(1-2\nu) \tag{9.28}$$

Substituting the value of σ_{av} from Equation (9.27) in Equation (9.28) and simplifying,

$$U_v = \frac{1-2\nu}{6E}\left[\left(\sigma_1^2 + \sigma_2^2 + \sigma_3^2\right) + 2\left(\sigma_1\sigma_2 + \sigma_2\sigma_3 + \sigma_3\sigma_1\right)\right] \tag{9.29}$$

Therefore, the amount of distortion energy is found as,

$$U_d = U - U_v = \frac{1+\nu}{3E}\left[\frac{(\sigma_1-\sigma_2)^2+(\sigma_2-\sigma_3)^2+(\sigma_3-\sigma_1)^2}{2}\right] \quad (9.30)$$

It can be noticed from Equation (9.30) that for $\sigma_1 = \sigma_2 = \sigma_3$, U_d is zero. For the uniaxial stress on an element writing $\sigma_1 = \sigma', \sigma_2 = \sigma_3 = 0$, the expression of the distortion energy becomes,

$$U_d = \frac{1+\nu}{3E}(\sigma')^2 \quad (9.31)$$

Now in accordance with the distortion energy theory, Equations (9.30) and (9.31) are equal, as a result,

$$\sigma' = \left[\frac{(\sigma_1-\sigma_2)^2+(\sigma_2-\sigma_3)^2+(\sigma_3-\sigma_1)^2}{2}\right]^{\frac{1}{2}} \quad (9.32)$$

Therefore, yielding will occur when,

$$\sigma' \geq S_y \quad (9.33)$$

Here σ' is called *effective stress* or *Von Mises stress*. For bi-axial stress state, Equation (9.32) reduces to,

$$\sigma' = \left(\sigma_A^2 - \sigma_A\sigma_B + \sigma_B^2\right)^{\frac{1}{2}} \quad (9.34)$$

where, σ_A and σ_B are two non zero principal stresses and $\sigma_A > \sigma_B$. For pure torsion writing $\sigma_A = -\sigma_B$ and $\tau = \sigma_A$, replacing σ' with S_y in Equation (9.34), one finds,

$$S_y^2 = \tau^2 + \tau^2 + \tau^2 \text{ or, } \tau = \sqrt{\frac{1}{3}}S_y = 0.577S_y \quad (9.35)$$

It is seen that the distortion energy theory predicts yield strength in shear larger than that predicted by the maximum shear stress theory. Since the distortion energy theory deals with yield strength of materials, it is applicable to the ductile materials only.

Question 9.11: Give a graphical comparison of different failure theories.

Answer:

A graphical comparison of the different failure theories with the experimental data for some materials is given in Figure 9.10. Comparing with the experiment data it is observed that the distortion energy theory predicts yielding with higher accuracy; on the other hand, the maximum shear stress theory gives the results on the conservative side. The maximum normal stress theory and the maximum shear stress theory are identical in the first and third quadrants. In the second and fourth quadrants the maximum normal stress theory is far away from the maximum shear stress theory and the distortion energy theory. The results show that application of the maximum normal stress theory will be dangerous in the second and fourth quadrants.

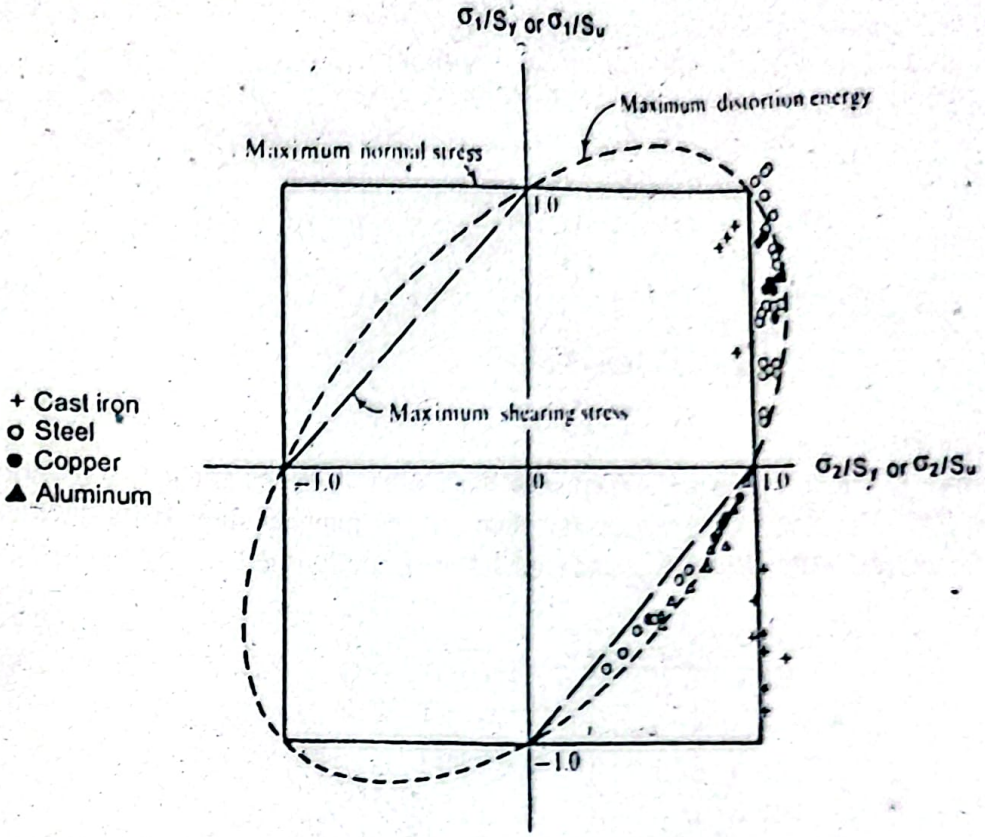

Figure 9.10: A Graphical Comparison of Failure Theories with Experimental Data.

SOLVED PROBLEMS

Problem P9.1:
A solid circular steel rod of length $1.5m$ is subjected to an axial tensile load P for which the normal stress developed in the rod is $300MPa$ and the amount of strain energy stored is $50Nm$. Determine the axial load P and the diameter of rod. Consider modulus of elasticity of steel $E_s = 200GPa$.

Given Data:
Length of rod, $L = 1.5m$
Normal stress, $\sigma = 300MPa$
Strain energy, $U = 50Nm$
Modulus of elasticity of steel, $E_s = 200GPa$

To Find:
- Axial load, P
- Diameter of rod, d

Solution:
Axial load, $P = \sigma \times A$

or, $P = 300A\ N$

Strain energy, $U = \dfrac{P^2 L}{2AE}$

$$\text{or, } 50\times10^3 = \frac{(300A)^2\times1.5\times10^3}{2\times A\times200\times10^3}$$

$$\text{or, } A = 148.15mm^2$$

Therefore, $P = 300\times148.15kN$

$$\text{or, } P = 44.44kN \quad \textit{Answer}$$

$$\text{and, } A = 148.15 = \frac{\pi d^2}{4}$$

$$\text{or, } d = 13.73mm \quad \textit{Answer}$$

Problem P9.2:

A member of length L and uniform cross-sectional area A hangs vertically as shown Figure P9.2. Determine the strain energy stored in the member due to its self weig Specific weight of the member is γ and modulus of elasticity is E.

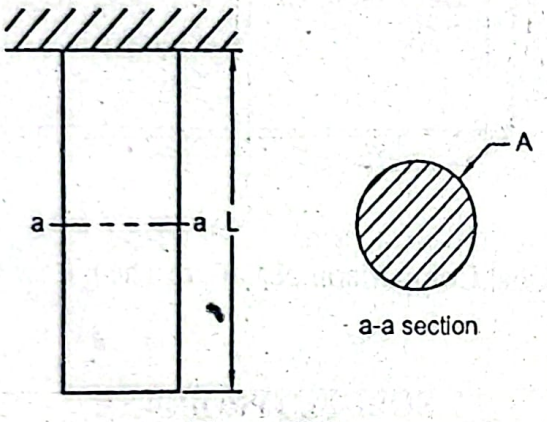

Figure P9.2

Given Data:

Length of member = L

Cross-sectional area = A

Modulus of elasticity = E

Specific weight = γ

To Find:

- Strain energy stored, U

Solution:

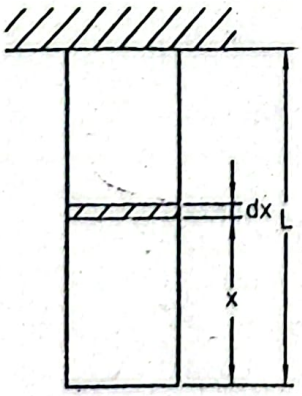

differential volume of length dx and cross-sectional area A are considered as shown the figure above. The weight acting downward on this differential volume is equal to e weight of the portion of member of length x below this differential volume. erefore, the strain energy in the differential volume is,

$$dU = \frac{(Ax\gamma)^2\, dx}{2AE}$$

$$\text{or, } U = \frac{A^2\gamma^2}{2AE}\int_0^L x^2 dx$$

$$= \frac{A^2\gamma^2}{2AE} \times \frac{L^3}{3}$$

$$= \frac{A\gamma^2 L^3}{6E} \quad \textit{Answer}$$

oblem P9.3:

solid circular steel rod of length L is subjected to a twisting moment T. Find an pression of strain energy in terms of T, G and J, where G and J are respectively the odulus of rigidity and polar moment of inertia.

iven Data:

ength of shaft $= L$

wisting moment $= T$

Modulus of rigidity $= G$

olar moment of inertia $= J$

o Find:

xpression of strain energy, U

olution:

he section of the shaft is shown below.

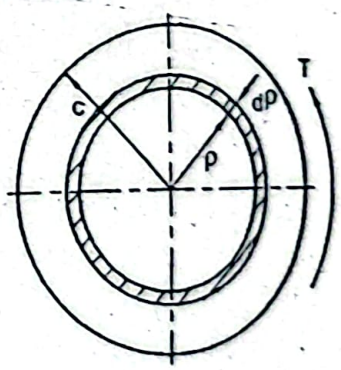

Ve have for strain energy,

$$U = \int \frac{\tau^2}{2G} dv$$

hearing stress, $\tau = \frac{\rho}{c}\tau_{max} = \frac{\rho}{c} \times \frac{Tc}{J} = \frac{T\rho}{J}$

lemental volume, $dV = 2\pi\rho d\rho L$

herefore, $U = \frac{1}{2G}\int \frac{T^2\rho^2}{J^2} 2\pi\rho L\, d\rho$

$$\text{or, } U = \frac{T^2}{2GJ^2} \times 2\pi L \int_0^c \rho^3 d\rho$$

$$= \frac{T^2}{2GJ^2} \times 2\pi L \times \frac{c^4}{4}$$

$$= \frac{T^2 L}{2GJ^2} \times \frac{\pi c^4}{2}$$

$$= \frac{T^2 L}{2GJ^2} \times J \quad (\text{Since } J = \frac{\pi c^4}{2})$$

$$= \frac{T^2 L}{2GJ} \textit{ Answer}$$

Problem P9.4:

A stepped solid circular steel rod is subjected to an axial tensile load P as shown Figure P9.4. Yield strength of the rod material is $300MPa$. Determine the maxim strain energy so that permanent deformation occurs in the rod. Consider modulus elasticity of steel $E_{st} = 200GPa$.

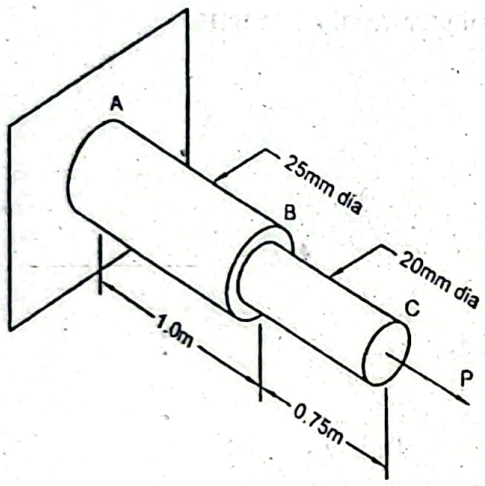

Figure P9.4

Given Data:

Yield strength, $S_y = 300MPa$

Modulus of elasticity of steel, $E_{st} = 200GPa$

To Find:

- Maximum strain energy, U

Solution:

In the portion BC of the rod ABC, the stress will be higher; as a result stress will reach the yield point in this portion first. Therefore, this portion will limit the load Considering the portion BC,

$$S_y = \frac{P}{A_{BC}}$$

$$\text{or, } 300 = \frac{4P}{\pi \times 20^2}$$

or, $P = 94247.78N$

imum strain energy, $U = U_{AB} + U_{BC}$

$$= \left(\frac{P^2 L}{2AE_{st}}\right)_{AB} + \left(\frac{P^2 L}{2AE_{st}}\right)_{BC}$$

$$= \frac{(94247.78)^2 \times 1 \times 10^3 \times 4}{2\pi \times 25^2 \times 200 \times 10^3} + \frac{(94247.78)^2 \times 0.75 \times 10^3 \times 4}{2\pi \times 20^2 \times 200 \times 10^3}$$

$$= 98.25Nm \text{ Answer}$$

oblem P9.5:

composite rod ABC fabricated from steel and brass material is subjected to an axial ısile load P as shown in Figure P9.5. Yield strength of steel and brass are respectively $0MPa$ and $170MPa$. Modulus of elasticity of steel and brass are respectively $0GPa$ and $100GPa$. Determine the maximum strain energy for which no permanent formation will occur in the rod.

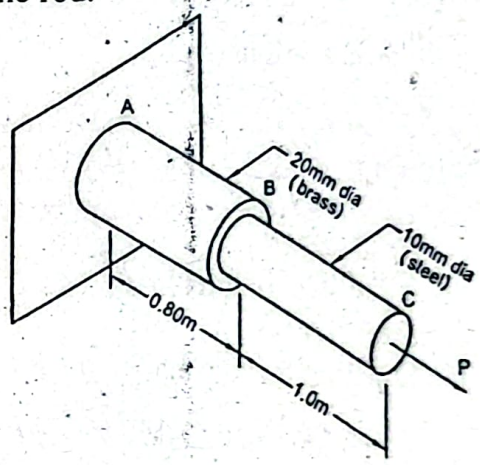

Figure P9.5

Given Data:

Yield strength of steel, $S_{y_{st}} = 420MPa$

Yield strength of brass, $S_{y_{br}} = 170MPa$

Modulus of elasticity of steel, $E_{st} = 200GPa$

Modulus of elasticity of brass, $E_{br} = 100GPa$

To Find:

- Maximum strain energy, U

Solution:

Same load P will occur in both brass portions of the rod.

Total strain energy, $U = U_{br} + U_{st}$

$$= \left(\frac{P^2 L}{2AE}\right)_{br} + \left(\frac{P^2 L}{2AE}\right)_{st}$$

$$= \frac{P^2 \times 0.8 \times 4}{2\pi \times 0.02^2 \times 100 \times 10^9} + \frac{P^2 \times 1.0 \times 4}{2\pi \times 0.01^2 \times 200 \times 10^9}$$

$$= 4.4563 \times 10^{-8} P^2 \ Nm$$

Normal stress in the brass portion,

$$\sigma_{br} = \frac{P}{A_{br}} = \frac{4P}{\pi \times 20^2}$$

When yield stress is reached in the brass portion,

$$\sigma_{br} = S_{y\,br} = 170MPa$$

$$\text{or, } 170 = \frac{4P}{\pi \times 20^2}$$

$$\text{or, } P = 53.41kN$$

Normal stress in the steel portion,

$$\sigma_{st} = \frac{P}{A_{st}}$$

$$\text{or, } \sigma_{st} = \frac{4P}{\pi \times 20^2}$$

When yield stress is reached in the steel portion,

$$\sigma_{st} = S_{y\,st} = 420MPa$$

$$\text{or, } 420 = \frac{4P}{\pi \times 10^2}$$

$$\text{or, } P = 32.99kN$$

It is seen that yielding will reach in the steel portion first.
Therefore, the required load, $P = 32.99kN$
Substituting this value of load in Equation (i), the maximum strain energy becomes,

$$U = 4.4563 \times 10^{-8} \times \left(32.99 \times 10^3\right)^2$$

$$= 48.49Nm \ Answer$$

Problem P9.6:
A stepped solid circular steel shaft is subjected to a torque of $6kNm$ at its free end C a torque of $10kNm$ at the junction B as shown in Figure P9.6. Determine the total energy in the shaft. Modulus of rigidity of the shaft material is $80GPa$.

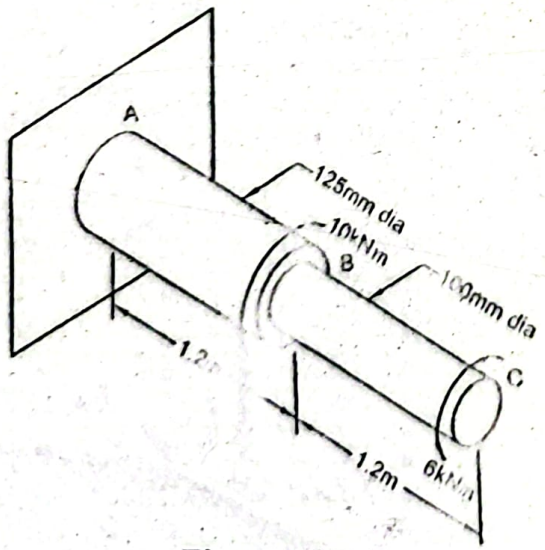

Figure P9.6

Given Data:

Torque at free end A, $T_A = 6kNm$

Torque at junction B, $T_B = 10kNm$

Modulus of rigidity of steel, $G_{st} = 80GPa$

To Find:

- Total strain energy, U

Solution:

Total strain energy, $U = U_{BC} + U_{AB}$

$$= \left(\frac{T^2 L}{2GJ}\right)_{BC} + \left(\frac{T^2 L}{2GJ}\right)_{AB}$$

$$= \frac{\left(6\times10^6\right)^2 \times 1.2\times10^3 \times 32}{2\times80\times10^3\times\pi\times100^4} + \frac{\left(-4\times10^6\right)^2 \times 1.2\times10^3 \times 32}{2\times80\times10^3\times\pi\times125^4}$$

$$= 32.5Nm \text{ Answer}$$

Problem P9.7:

An axial load P is applied to a solid circular steel rod of length $2.0m$. Strain energy stored in the rod is $25Nm$. If the safety factor with respect to strain energy is 5 to guard against permanent deformation and yield strength $S_y = 300MPa$, determine the rod diameter. Consider modulus of elasticity of steel $E_{st} = 200GPa$.

Given Data:

Length of rod, $L = 2.0m$

Strain energy stored, $U = 25Nm$

Yield strength, $S_y = 300MPa$

Modulus of elasticity of steel, $E_{st} = 200GPa$

Safety factor, $n = 5$

To Find:

- Diameter of rod, d

Solution:

We have an expression of strain energy density,

$$U_o = \frac{\sigma_x^2}{2E} \qquad (i)$$

Strain energy incorporating safety factor,

$$U = n\times25 = 5\times25Nm = 125Nm$$

Volume of the rod, $V = \frac{\pi d^2}{4}\times L = \frac{\pi d^2}{4}\times2 = \frac{\pi}{2}d^3\,m^3$

Therefore, strain energy density,

$$U_o = \frac{U}{V} = \frac{125\times2}{\pi d^2} = \frac{250}{\pi d^2}\frac{Nm}{m^3}$$

Substituting in Equation (i), $\frac{250}{\pi d^2} = \frac{(300\times10^6)^2}{2\times200\times10^9}$ (Here $\sigma_x = \sigma_y = 300MPa$)

or, $d = 18.81mm$ **Answer**

Problem P9.8:

A tapered steel member AB of length $750mm$ is subjected to an axial tensile load of $125kN$ as shown in Figure P9.8. Determine the strain energy in the member if the diameters at the base A and end B are respectively $300mm$ and $150mm$. Consider modulus of elasticity of steel $E_s = 200GPa$.

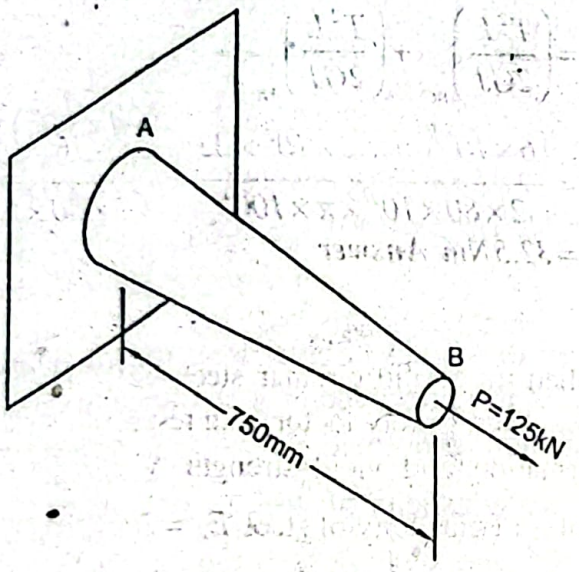

Figure P9.8

Given Data:

Length of member, $L = 750mm$

Diameter at base A, $d_A = 300mm$

Diameter at end B, $d_B = 150mm$

Axial tensile load, $P = 125kN$

Modulus of elasticity of steel, $E_s = 200GPa$

To Find:

- Strain energy, U

Solution:

The various dimensions of the tapered member are shown in the following figure. A differential element of thickness dx is considered at a distance of x from the left end of the member.

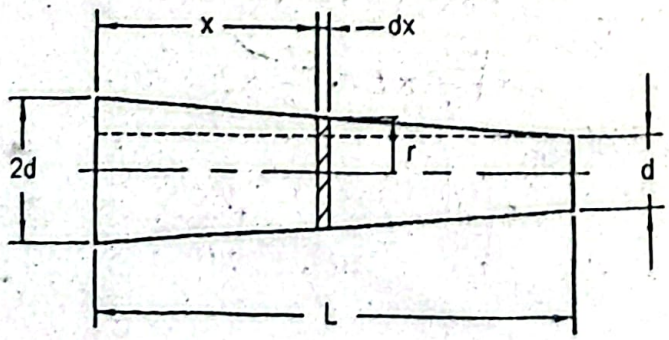

Diameter at the end B, $d_B = 150mm = d$

Then diameter at the base A, $d_A = 300mm = 2d$

From the similar triangles, $\dfrac{d-\dfrac{d}{2}}{r-\dfrac{d}{2}} = \dfrac{L}{L-x}$

$$\text{or, } \frac{d}{2L} = \frac{r-\frac{d}{2}}{L-x}$$

$$\text{or, } \left(r-\frac{d}{2}\right) = \frac{d}{2L}(L-x)$$

$$\text{or, } r = \frac{d}{2} + \frac{d}{2L}(L-x) \qquad (i)$$

We have for strain energy, $U = \int \dfrac{P^2 dx}{2AE}$

$$= \frac{P^2}{2E}\int \frac{dx}{A}$$

$$= \frac{P^2}{2E}\int \frac{dx}{\pi r^2}$$

$$= \frac{P^2}{2\pi E}\int \frac{dx}{r^2}$$

Substituting the value of r from Equation (i),

$$U = \frac{P^2}{2\pi E}\int \frac{dx}{\left[\frac{d}{2} + \frac{d}{2L}(L-x)\right]^2}$$

Let $z = \dfrac{d}{2} + \dfrac{d}{2L}(L-x)$

$$\text{or, } dz = -\frac{d}{2L}dx$$

$$\text{or, } dx = -\frac{2L}{d}dz$$

Therefore, $U = \dfrac{P^2}{2\pi E}\int\left(-\dfrac{2L}{d}\right)\dfrac{d^2}{z^2}$

$$= \frac{P^2}{2\pi E}\frac{2L}{d}\frac{1}{z}$$

$$= \frac{P^2 L}{\pi E d} \times \left[\frac{}{\frac{d}{2} + \frac{d}{2L}(L-x)}\right]_0^L$$

$$= \frac{P^2 L}{\pi E d}\left[\frac{2}{d} - \frac{1}{d}\right]$$

$$= \frac{P^2 L}{\pi E_{st} d^2} \quad (\text{Here } E = E_{st})$$

$$= \frac{\left(125\times10^3\right)^2 \times 0.75}{\pi \times 200\times10^9 \times (0.15)^2} Nm = 0.829Nm \textbf{ Answer}$$

Problem P9.9:

An aluminum shaft ABC is subjected to a twisting moment T at its free end as shown Figure P9.9. If the limiting shearing stress in the rod is $50MPa$, determine the total stra energy in the rod. Consider modulus of elasticity of aluminum $E_{al} = 30GPa$.

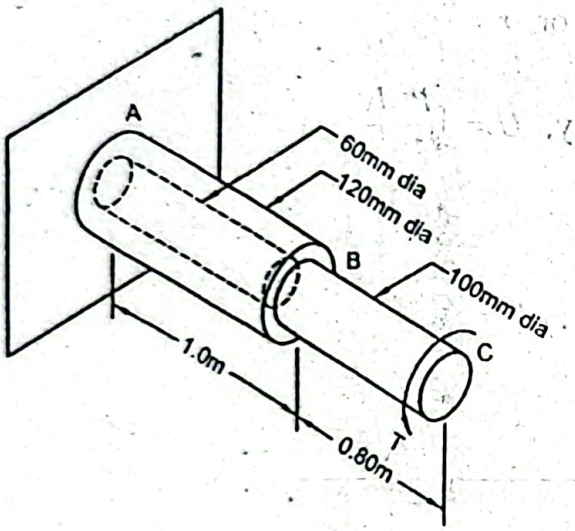

Figure P9.9

Given Data:

Limiting shearing stress, $\tau_a = 50MPa$

Modulus of elasticity of aluminum, $E_{al} = 30GPa$

To Find:

- Total strain energy, U

Solution:

In the portion AB of the rod, shearing stress,

$$\tau_{AB} = \left(\frac{Tc}{J}\right)_{AB}$$

$$\text{or, } \tau_a = 50 = \frac{T_{AB} \times \frac{120}{2}}{\frac{\pi}{32}\left(120^4 - 60^4\right)}$$

$$\text{or, } T_{AB} = 15.90kNm$$

In the portion BC of the rod, shearing stress,

$$\tau_{BC} = \left(\frac{Tc}{J}\right)_{BC}$$

$$\text{or, } \tau_a = 50 = \frac{T_{BC} \times \frac{100}{2}}{\frac{\pi}{32} \times 100^4}$$

$$\text{or, } T_{BC} = 9.82kNm$$

That is, for limiting shearing stress the maximum torque $T = 9.82kNm$

Therefore, the required strain energy,

$$U = \left(\frac{T^2 L}{2GJ}\right)_{AB} + \left(\frac{T^2 L}{2GJ}\right)_{BC}$$

$$= \frac{\left(9.82 \times 10^3\right)^2 \times 1.0}{2 \times 30 \times 10^9 \times \frac{\pi}{32}\left(0.12^4 - 0.06^4\right)} + \frac{\left(9.82 \times 10^3\right)^2 \times 0.80}{2 \times 30 \times 10^9 \times \frac{\pi}{32} \times 0.10^4}$$

$$= 215.18Nm \text{ Answer}$$

Problem P9.10:

A truss as shown in Figure P9.10 supports a load $P = 125kN$. If all the members of the truss are made of steel and have the uniform cross-sectional area of $1200mm^2$, determine the total strain energy stored in the truss. Consider modulus of elasticity of steel $E_{st} = 200GPa$.

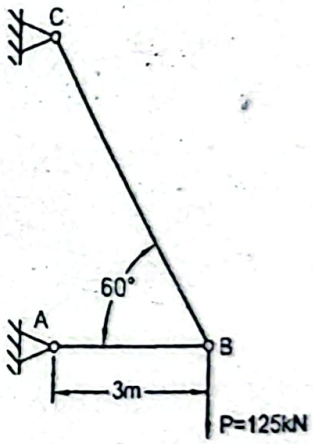

Figure P9.10

Given Data:

Load, $P = 125kN$

Cross-sectional area of each member, $A = 1200mm^2$

Modulus of elasticity of steel, $E_s = 200GPa$

To Find:

Total strain energy, U

Solution:

Vertical components in static equilibrium condition considering the joint B as shown below,

$$+\uparrow \sum F_y = 0$$

$$\text{or, } P_{BC}\sin 60^0 - P = 0$$

$$\text{or, } P_{BC} = \frac{P}{\sin 60^0} = 1.1547P \text{ (Tension)}$$

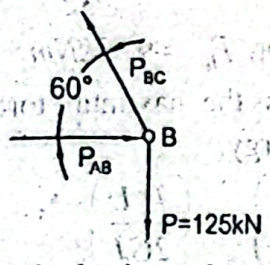

In equilibrium condition considering the horizontal components,

$$+\rightarrow \sum F_x = 0$$

$$P_{AB} - P_{BC}\cos 60^0 = 0$$

$$\text{or, } P_{AB} = P_{BC}\cos 60^0 = 1.1547P\cos 60^0$$

$$= 0.5774P \text{ (Compression)}$$

Length, $$L_{BC} = \frac{L_{AB}}{\cos 60^0} = \frac{3}{\cos 60^0} = 6m$$

Therefore, the required total strain energy,

$$U = \frac{P_{AB}^2 L_{AB}}{2AE_{st}} + \frac{P_{BC}^2 L_{BC}}{2AE_{st}}$$

$$\text{or, } U = \frac{1}{2AE_{st}}\left[(-0.5774P)^2 \times 3 + (1.1547P)^2 \times 6\right]$$

$$= \frac{9P^2}{2AE_{st}} = \frac{9\times(125\times10^3)^2}{2\times1200\times10^{-6}\times200\times10^9} Nm$$

$$= 292.97Nm \text{ Answer}$$

Problem P9.11:

A truss made of steel supports a load P as shown in Figure P9.11. The cross-section the members of truss are so designed that each member reaches half the stress of yie strength. Determine the load P if the total strain energy stored in the truss is $590.5N$ Yield strength and modulus of elasticity of steel are respectively $300MPa$ and $200GPa$

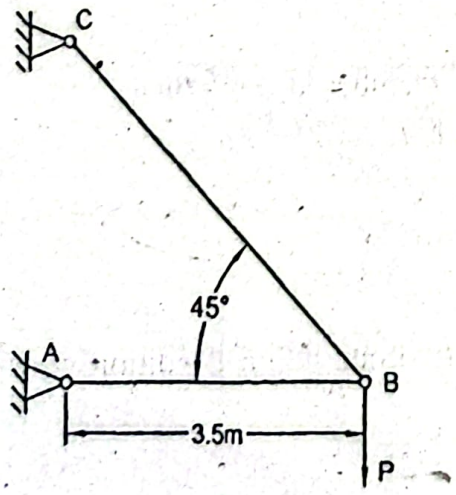

Figure P9.11

Given Data:

Total strain energy stored, $U = 590.5 Nm$

Yield strength, $S_y = 300MPa$

Modulus of elasticity of steel, $E_s = 200GPa$

To Find:

Load, P

Solution:

Considering the joint B as shown below,

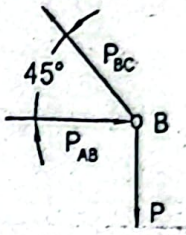

In static equilibrium condition,

$$+\uparrow \sum F_y = 0$$

or, $P_{BC} \sin 45^0 - P = 0$

or, $P_{BC} = \dfrac{P}{\sin 45^0} = 1.414P \; kN$

$$+\rightarrow \sum F_x = 0$$

$$P_{AB} - P_{BC} \cos 45^0 = 0$$

or, $P_{AB} = P_{BC} \cos 45^0 = 1.4147P \cos 45^0 = P \; kN$

Stress in the member AB, $\sigma_{AB} = \dfrac{S_y}{2} = \dfrac{300}{2} MPa = 150MPa$

Stress in the member BC, $\sigma_{BC} = \dfrac{S_y}{2} = 150MPa$

Length of the member BC

$$L_{BC} \cos 45^0 = L_{AB}$$

or, $L_{BC} = \dfrac{L_{AB}}{\cos 45^0} = \dfrac{3.5}{\cos 45^0} m = 4.95m$

Cross-sectional area of the member AB,

$$A_{AB} = \frac{P_{AB}}{\sigma_{AB}} = \frac{P \times 10^3}{150} = 6.667P \, mm^2$$

Cross-sectional area of the member BC,

$$A_{BC} = \frac{P_{BC}}{\sigma_{BC}} = \frac{1.414P \times 10^3}{150} = 9.427P \, mm^2$$

Therefore, the total strain energy in the truss,

$$U = U_{AB} + U_{BC}$$

or, $U = \dfrac{P_{AB}^2 L_{AB}}{2A_{AB}E_s} + \dfrac{P_{BC}^2 L_{BC}}{2A_{BC}E_s}$

$$\text{or, } 590.5 = \frac{(P\times10^3)^2\times3.5}{2\times6.667P\times10^{-6}\times200\times10^9} + \frac{(1.414P\times10^3)^2\times4.95}{2\times9.427P\times10^{-6}\times200\times10^9}$$

or, $P = 150kN$ **Answer**

Problem P9.12:

A truss as shown in Figure P9.12 supports a load $P = 100kN$. If all the members of truss are made of steel and have the uniform cross-sectional area of $1000mm^2$, determi the total strain energy stored in the truss. Consider modulus of elasticity of st $E_{st} = 200GPa$.

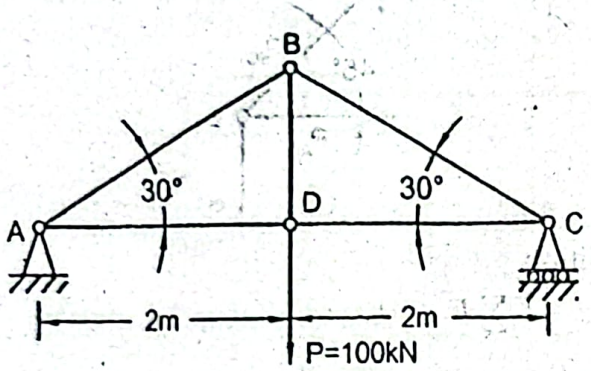

Figure P9.12

Given Data:

Load, $P = 100kN$

Cross-sectional area of each member, $A = 1000mm^2$

Modulus of elasticity of steel, $E_{st} = 200GPa$

To Find:

- Total strain energy of truss, U

Solution:

Free body diagram of the entire truss is given in the following figure.

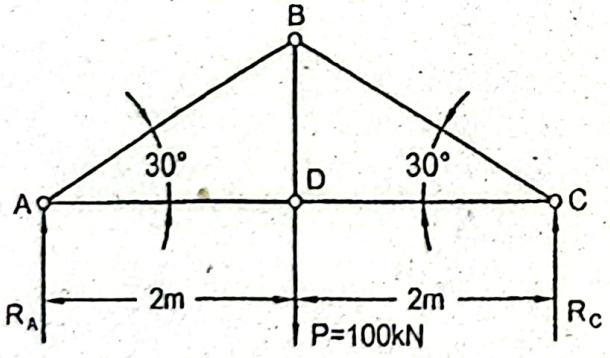

Free body diagram of entire truss

Due to symmetry reactions, $R_A = R_C = \frac{P}{2}$

Vertical components in static equilibrium condition considering the joint A as show below,

$$+\uparrow \sum F_y = 0$$

$$R_A - P_{AB}\sin 30^0 = 0$$

$$\text{or, } \frac{P}{2} - P_{AB}\sin 30^0 = 0$$

$$\text{or, } P_{AB} = P \text{ (Compression)}$$

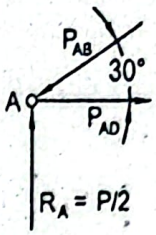

Horizontal components in static equilibrium condition,

$$+\rightarrow \sum F_x = 0$$

$$\text{or, } P_{AD} - P_{AB}\cos 30^0 = 0$$

$$\text{or, } P_{AD} = P_{AB}\cos 30^0 = P\cos 30^0$$

$$\text{or, } P_{AD} = 0.866P \text{ (Tension)}$$

Now considering the joint D as shown in the following figure,

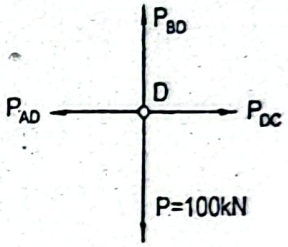

Vertical components in static equilibrium condition,

$$+\uparrow \sum F_y = 0$$

$$P_{BD} - P = 0$$

$$\text{or, } P_{BD} = P \text{ (Tension)}$$

Due to symmetry, $P_{BC} = P_{AB} = P$ (Compression)

and, $P_{AD} = P_{DC} = 0.866P$ (Tension)

Length of the member AD, $L_{AD} = L_{DC} = 2.0m$

Length of the member AB, $L_{AB} = \frac{L_{AD}}{\cos 30^0} = \frac{2}{\cos 30^0} = 2.3094m = L_{BC}$

Length of the member BD, $L_{BD} = L_{AD}\tan 30^0 = 2\tan 30^0 = 1.1547m$

Therefore, the total strain energy,

$$U = \frac{P_{AB}^2 L_{AB}}{2AE_{st}} + \frac{P_{BC}^2 L_{BC}}{2AE_{st}} + \frac{P_{BD}^2 L_{BD}}{2AE_{st}} + \frac{P_{AD}^2 L_{AD}}{2AE_{st}} + \frac{P_{DC}^2 L_{DC}}{2AE_{st}}$$

$$= \frac{1}{2AE_{st}}\left[(-P)^2 \times 2.3094 \times 2 + P^2 \times 1.1547 + (0.866P)^2 \times 2 \times 2\right]$$

$$= \frac{8.7733P^2}{2AE_{st}} = \frac{8.7733 \times (100 \times 10^3)^2}{2 \times 1000 \times 10^{-6} \times 200 \times 10^9}$$

$$= 219.33Nm \text{ Answer}$$

Problem P9.13:

A steel cantilever beam of rectangular cross-section is subjected to a concentrated loa $P = 80kN$ at its free end as shown in Figure P9.13. Determine the strain energy stored i the beam. Consider modulus of elasticity of steel $E_{st} = 200GPa$ and modulus of rigidit of steel $G_{st} = 80GPa$.

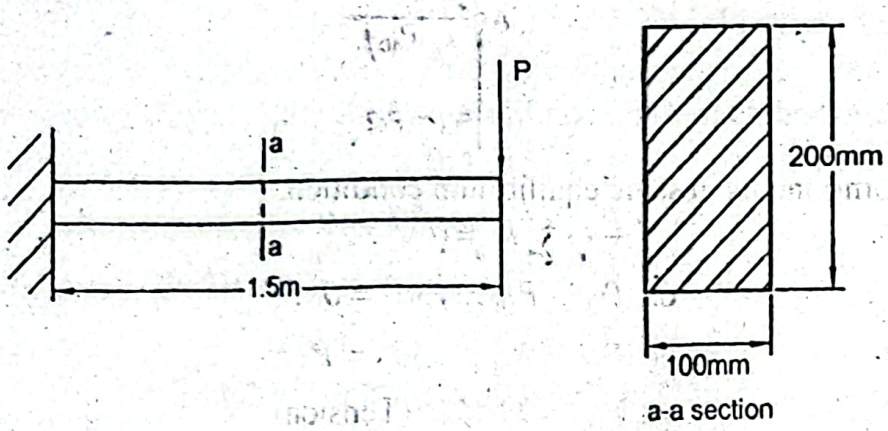

Figure P9.13

Given Data:

Length of beam, $L = 1.5m$

Depth of beam, $h = 200mm$

Breadth of beam, $b = 100mm$

Load, $P = 80kN$

Modulus of elasticity of steel, $E_{st} = 200GPa$

Modulus of rigidity of steel, $G_{st} = 80GPa$

To Find:

- Strain energy stored in beam, U

Solution:

Free body diagram of the entire beam is shown in the following figure.

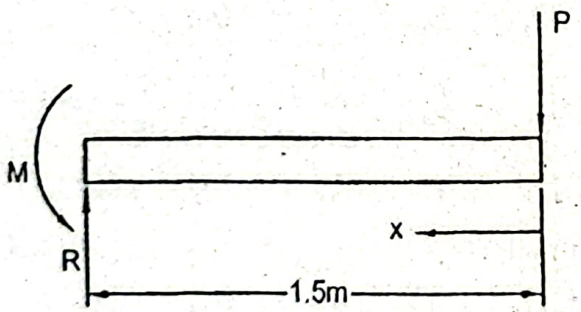

Free body diagram of entire beam

Bending moment at any distance x from the free end,

$$M_x = Px$$

Strain energy due to bending,

$$U_b = \int \frac{M_x^2 dx}{2E_{st}I}$$

$$= \frac{1}{2E_{st}I} \int_0^L (Px)^2 dx$$

$$= \frac{P^2}{2E_{st}I}\int_0^L x^2 dx$$

$$= \frac{P^2L^3}{6E_{st}I}$$

To determine the strain energy U_S due to shear, Equation (4.21) is used for the shearing stress.

$$\tau = \frac{3V}{2A}\left(1-\frac{y^2}{c^2}\right)$$

$$\text{or, } \tau = \frac{3}{2}\frac{P}{bh}\left(1-\frac{y^2}{c^2}\right)$$

In the above equation shear force $V = P$ and is constant throughout the length of the beam.

We have an expression of strain energy for shearing stress,

$$U_S = \int \frac{\tau^2}{2G_{st}} dV$$

Substituting the value of τ and writing $dV = b\,dx\,dy$,

$$U_S = \frac{9P^2}{8G_{st}bh^2}\int_{-c}^{+c}\left(1-\frac{2y^2}{c^2}+\frac{y^4}{c^4}\right)dy\int_0^L dx$$

$$= \frac{9P^2}{8G_{st}bh^2}\left[y-\frac{2}{3}\frac{y^3}{c^2}+\frac{1}{5}\frac{y^5}{c^4}\right]_{-c}^{+c}\times L$$

$$= \frac{3P^2L}{5G_{st}bh} = \frac{3P^2L}{5G_{st}A} \quad \text{(Replacing } c \text{ by } \frac{h}{2} \text{ and } bh \text{ by } A\text{)}$$

Therefore, the total strain energy of the beam,

$$U = U_b + U_S$$

$$= \frac{P^2L^3}{GE_{st}I}+\frac{3P^2L}{5G_{st}A}$$

$$= \frac{P^2L^3}{6E_{st}I}\left(1+\frac{3E_{st}h^2}{10G_{st}L^2}\right) \quad \text{(Putting } I = \frac{1}{12}bh^3 \text{ and } A = bh\text{)}$$

$$= \frac{\left(80\times10^3\right)^2\times1.5^3}{6\times200\times10^9\times\frac{1}{12}\times0.1\times0.2^3}\left[1+\frac{3\times200\times10^9\times0.2^2}{10\times80\times10^9\times1.5^2}\right]$$

$$= 273.6\,Nm \text{ Answer}$$

Problem P9.14:

A beam of square cross-section is subjected to a clockwise couple $M_c = 40kNm$ as shown in Figure P9.14. Determine the strain energy stored in the beam omitting shearing stress. Modulus of elasticity is $200GPa$.

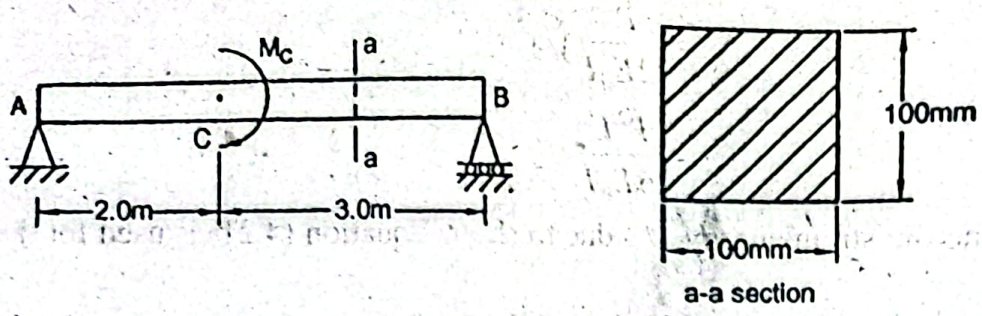

Figure P9.14

Given Data:

Couple, $M_c = 40kNm$

Modulus of elasticity, $E = 200GPa$

To Find:

- Strain energy, U

Solution:

Free body diagram of the entire beam and the bending moment diagram are shown below.

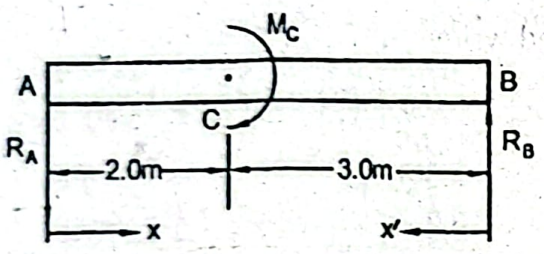

Free body diagram of entire beam

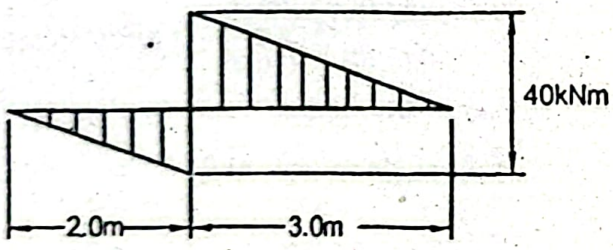

Bending moment diagram

Taking moment about A in equilibrium condition,

$$+\circlearrowleft \sum M_A = 0$$

$$\text{or, } -M_c + R_B \times 5 = 0$$

$$\text{or, } R_B = \frac{M_c}{5} = \frac{40}{5} kN = 8kN$$

Considering the vertical components,

$$+\uparrow \sum F_y = 0$$

$$-R_A + R_B = 0$$

$$\text{or, } R_A = R_B = 8kN$$

Bending moment, $M_x = -R_A\, x = -8 \times 10^3\, x\ Nm$

Bending moment, $M_{x'} = R_B\, x' = 8 \times 10^3 \times x'\ Nm$

Therefore, the strain energy stored in the beam,

$$U = \int \frac{M_x^2 dx}{2EI} + \int \frac{M_x^2 dx'}{2EI}$$

$$\text{or, } U = \frac{1}{2EI}\left[\int_0^2 \left(-8\times10^3\right)^2 x^2 dx + \int_0^3 \left(8\times10^3\right)^2 x'^2 dx\right]$$

$$= \frac{1}{2\times200\times10^9\times\frac{1}{12}\times(0.1)^4}\times\left[\left(8\times10^3\right)\times\frac{(2)^3}{3} + \left(8\times10^3\right)^2\times\frac{(3)^3}{3}\right]$$

$$= 224Nm \text{ Answer}$$

Problem P9.15:

Determine the strain energy stored in the beam as shown in Figure P9.15 omitting shearing stress. Modulus of elasticity of the beam material is *200GPa*.

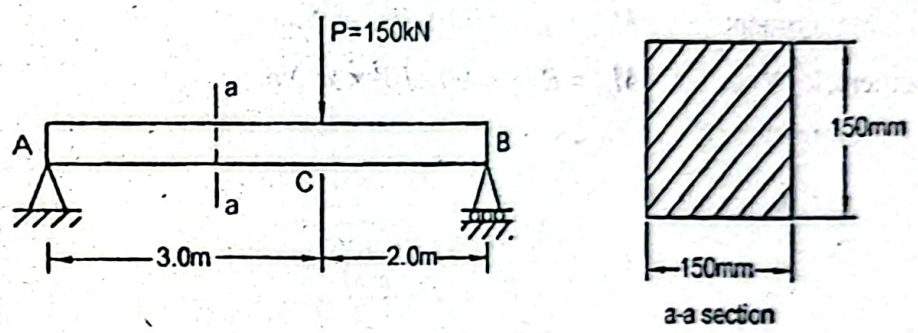

Figure P9.15

Given Data:

Length of beam, $L = 5m$

Load, $P = 150kN$

Modulus of elasticity, $E = 200GPa$

To Find:

Strain energy, U

Solution:

Free body diagram of the entire beam and the bending moment diagram are shown below.

In equilibrium condition taking moment about A,

$$+\circlearrowleft \sum M_A = 0$$

$$R_B \times 5 - P\times 3 = 0$$

$$\text{or, } R_B = \frac{150\times3}{5} kN = 90kN$$

Taking summation of the forces in the vertical direction,

$$+\uparrow \sum F_y = 0$$

$$R_A + R_B - P = 0$$

$$\text{or, } R_A = P - R_B(150-90)kN = 60kN$$

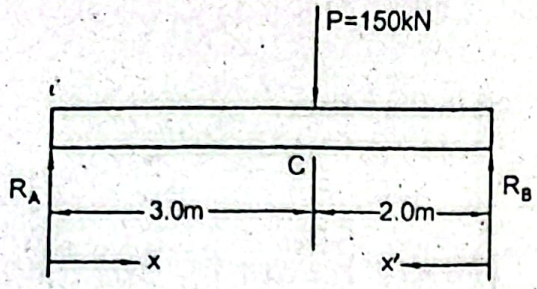

Free body diagram of entire beam

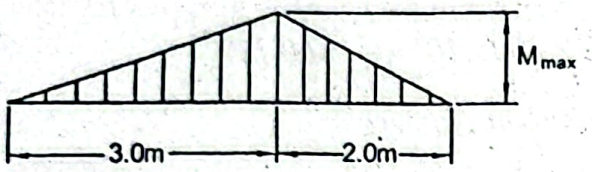

Bending moment diagram

Now the bending moment, $M_x = R_A\ x = 60\times10^3\ x\ \ Nm$

Bending moment, $M_{x'} = R_B\ x' = 90\times10^3\times x'\ Nm$

Therefore, the strain energy stored in the beam,

$$U = U_{AC} + U_{CB}$$

$$\text{or, } U = \int_0^3 \frac{M_x^2 dx}{2EI} + \int_0^2 \frac{M_{x'}^2\ dx'}{2EI}$$

$$\text{or, } U = \frac{1}{2EI}\left[\int_0^3 \left(60\times10^3 x\right)^2 dx + \int_0^2 \left(90\times10^3 x'\right)^2 dx'\right]$$

$$= \frac{1}{2EI}\left[\int_0^3 \left(60\times10^3\right)^2 x^2 dx + \int_0^2 \left(90\times10^3\right)^2 x'^2 dx'\right]$$

$$= \frac{1}{2EI}\left[\left(60\times10^3\right)^2 \times \frac{(3)^3}{3} + \left(90\times10^3\right)^2 \times \frac{(2)^3}{3}\right]$$

$$= \frac{1}{2\times200\times10^9 \times \frac{1}{12}\times0.15^4} \times \left[\left(60\times10^3\right)^2 \times \frac{(3)^3}{3} + \left(90\times10^3\right)^2 \times \frac{(2)^3}{3}\right]$$

$$= 3200Nm \ \textit{Answer}$$

Problem P9.16:

Find an expression of the total strain energy in the cantilever beam with a distributed lo as shown in Figure P9.16. Consider both the bending and shear.

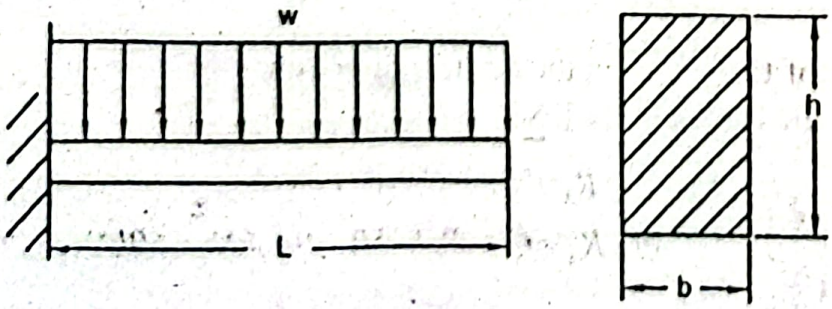

Figure P9.16

Given Data:

Length of beam $= L$

Depth of beam section $= h$.

Breadth of beam section $= b$

Distributed load $= w$

To Find:

- Expression for total strain energy, U

Solution:

Free body diagram of the entire beam, shear force and bending moment diagrams are shown in the figures below.

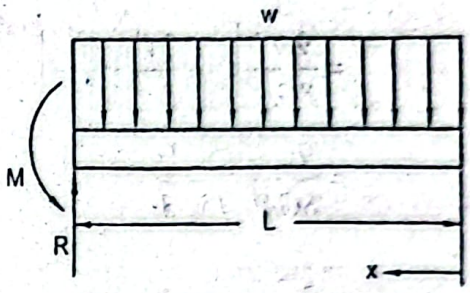

Free body diagram of entire beam

Shear force diagram

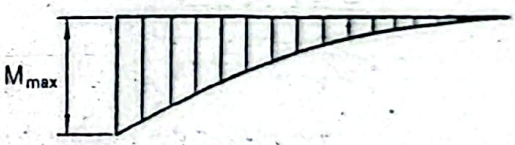

Bending moment diagram

Bending moment at any distance x from the free end,

$$M_x = \frac{wx^2}{2}$$

Strain energy due to bending, $U_b = \int \frac{M_x^2 dx}{2EI}$

Substituting the value of M_x, $U_b = \frac{w^2}{8EI}\int_0^L x^4 dx$

$$= \frac{w^2}{8EI}\frac{L^5}{5} = \frac{w^2L^5}{40EI} \qquad (i)$$

Strain energy due to shearing stress,

$$U_s = \int \frac{\tau^2}{2G} dV \qquad (ii)$$

We have the expression of shearing stress for a rectangular beam section from Equation (4.21) as,

$$\tau = \frac{3V}{2A}\left(1 - \frac{y^2}{c^2}\right)$$

Shearing stress at any distance from the free end,

$$V_x = wx$$

Also we have for a rectangular beam section,

$$dV = bdx\,dy$$

Substituting these values in Equation (ii),

$$U_s = \frac{9w^2b}{8GA^2}\int_{-c}^{+c}\left(1-\frac{y^2}{c^2}\right)^2 dy \int_0^L x^2 dx$$

$$= \frac{9w^2b}{8GA^2}\int_{-c}^{+c}\left(1-2\frac{y^2}{c^2}+\frac{y^4}{c^4}\right)dy \int_0^L x^2 dx$$

$$= \frac{9w^2b}{8GA^2}\left[y-\frac{2y^3}{3c^2}+\frac{y^5}{5c^4}\right]_{-c}^{+c}\left[\frac{x^3}{3}\right]_0^L$$

$$= \frac{9w^2b}{8GA^2}\frac{16c}{15}\frac{L^3}{3}.$$

Now substituting $c = \frac{h}{2}$ and $A = bh$ we find,

$$U_s = \frac{1}{5}\frac{w^2L^3}{Gbh} \qquad (i$$

Total strain energy, $U = U_b + U_s$

$$= \frac{w^2L^5}{40EI} + \frac{1}{5}\frac{w^2L^3}{Gbh}$$

$$= \frac{w^2L^5}{40EI}\left[1+\frac{8EI}{GbhL^2}\right]$$

Now writing $I = \frac{1}{12}bh$ and simplifying we obtain the required expression of the to strain energy as,

$$U = \frac{w^2L^5}{40EI}\left[1+\frac{2}{3}\frac{E}{G}\frac{h^2}{L^2}\right] \quad \textit{Answer}$$

Problem P9.17:

A cantilever beam of uniform cross-section supports a load P at its free end as shown Figure P9.17. Find the deflection and slope at the free end using Castigliano's theor Neglect shear.

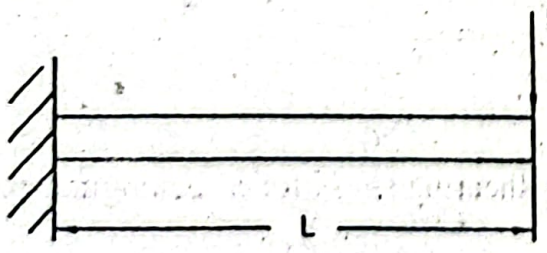

Figure P9.17

Given Data:

Length of beam = L

Load = P

To Find:

- Deflection, δ
- Slope, θ

Solution:

Free body diagram of the entire beam and the bending moment diagram are shown in the figures below.

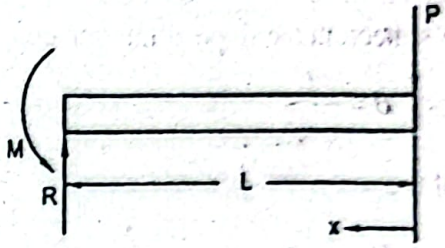

Free body diagram of entire beam

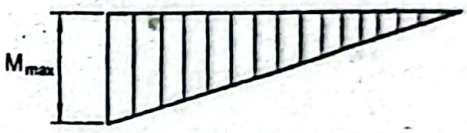

Bending moment diagram

Bending moment, $M = -Px$ *(i)*

According to Castigliano's theorem deflection,

$$\delta = \frac{\partial U}{\partial P}$$

We have for strain energy, $U = \int \frac{M^2 dx}{2EI}$

Therefore, the deflection, $\delta = \frac{\partial U}{\partial P} = \frac{\partial}{\partial P}\int \frac{M^2 dx}{2EI}$

$$= \int \left(\frac{\partial M}{\partial P}\right) \frac{\partial}{\partial M}\left(\frac{M^2 dx}{2EI}\right)$$

$$= \int \left(\frac{\partial M}{\partial P}\right) \frac{M\,dx}{EI}$$

From Equation *(i)*, $\frac{\partial M}{\partial P} = -x$

Therefore, the deflection, $\delta = \frac{1}{EI}\int_0^L (-x)(-Px)dx$

$$= \frac{P}{EI}\int_0^L x^2 dx = \left[\frac{P}{EI}\frac{x^3}{3}\right]_0^L = \frac{PL^3}{3EI} \downarrow \quad \textit{Answer}$$

Note: Positive sign indicates that the deflection occurs in the direction of force.

Free body diagram of the entire beam with an imaginary couple M_o is shown below.

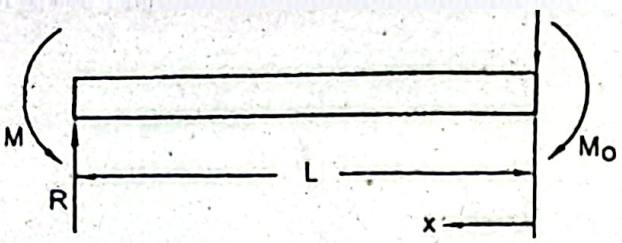

Free body diagram of entire beam

Bending moment, $M = -Px - M_0$

Differentiating, we find, $\frac{\partial M}{\partial M_0} = -1$

According to Castigliano's theorem the slope at the free end,

$$\theta = \frac{\partial U}{\partial M_0}$$

We have an expression of the strain energy,

$$U = \int \frac{M^2 dx}{2EI}$$

Therefore, the slope, $\theta = \frac{2U}{\partial M_0} = \frac{1}{2EI}\int_0^L \frac{\partial M}{\partial M_0}\frac{\partial}{\partial M} M^2 dx$

$$= \frac{1}{EI}\int_0^L \frac{\partial M}{\partial M_0} M dx$$

$$= \frac{1}{EI}\int_0^L (-1)(-Px - M_0)\, dx$$

Now setting the imaginary moment $M_0 = 0$ the slope becomes,

$$\theta = \frac{1}{EI}\int_0^L Px\, dx$$

$$= \frac{P}{EI}\frac{x^2}{2}\Big]_0^L$$

$$= \frac{PL^2}{2EI} \quad Answer$$

Problem P9.18:

Using Castigliano's theorem, find an expression of the maximum deflection of a sil- supported beam, which is subjected to a concentrated load at the midpoint as show Figure P9.18. Neglect shear.

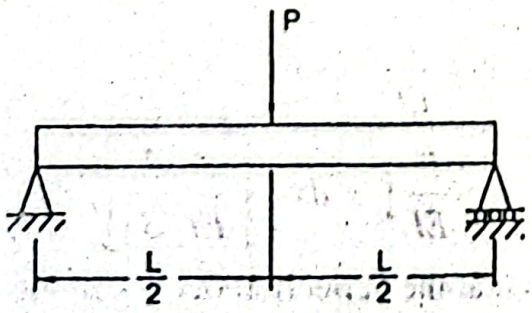

Figure P9.18

Given Data:

Length of beam $= L$

Concentrated load $= P$

To Find:

Expression of maximum deflection, δ

Solution:

Free body diagram of the entire beam and the bending moment diagram are shown below.

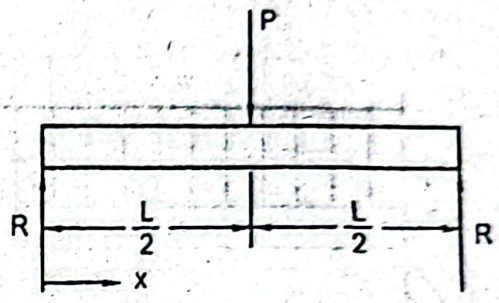

Free body diagram of entire beam

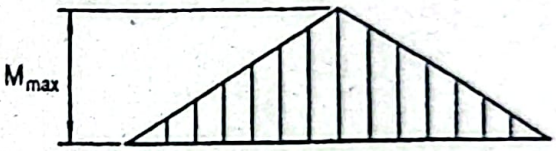

Bending moment diagram

Due to symmetry reaction, $R = \frac{P}{2}$

Bending moment, $M = Rx = \frac{P}{2}x$

Differentiating we find, $\frac{\partial M}{\partial P} = \frac{x}{2}$

Strain energy, $U = \int_0^L \frac{M^2 dx}{2EI} = 2\int_0^{L/2} \frac{M^2 dx}{2EI}$

Maximum deflection occurs at the midpoint of the beam.

Now the expression of the maximum deflection becomes,

$$\delta = \frac{\partial U}{\partial P} = \frac{\partial}{\partial P} 2\int_0^{L/2} \frac{M^2 dx}{2EI}$$

$$= \frac{1}{EI}\int_0^{L/2} \left(\frac{\partial M}{\partial P}\right) \frac{\partial}{\partial M}\left(M^2 dx\right)$$

$$= \frac{2}{EI}\int_0^{L/2} \left(\frac{\partial M}{\partial P}\right) M\, dx$$

$$= \frac{2}{EI}\int_0^{L/2} \frac{x}{2}\frac{P}{2} x dx$$

$$= \frac{P}{2EI}\int_0^{L/2} x^2 dx$$

$$= \frac{P}{2EI}\frac{x^3}{3}\Big]_0^{L/2}$$

$$= \frac{PL^3}{48EI} \downarrow \text{Answer}$$

Problem P9.19:

Using Castigliano's theorem, find the expressions of the deflection and slope at the end of a cantilever beam with a distributed load w as shown in Figure P9.19. Neg shear.

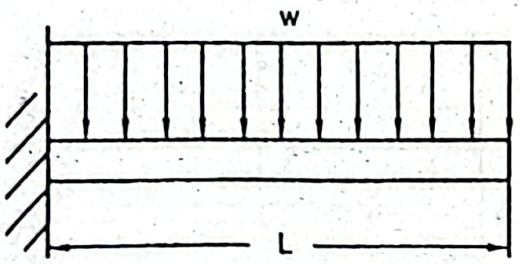

Figure P9.19

Given Data:

Length of beam = L

Distributed load = w

To Find:

- Expression of deflection at free end, δ
- Expression of slope at free end, θ

Solution:

Free body diagram of the entire beam is given below.

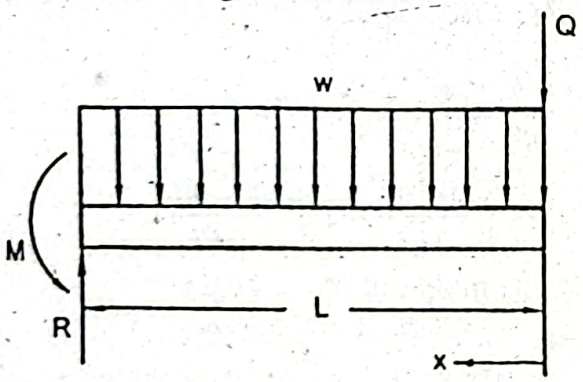

Free body diagram of entire beam

According to Castigliano's theorem, an imaginary load Q is assumed at the free end o the beam where the deflection is to be obtained.

Bending moment, $M = -Qx - \frac{wx^2}{2}$

Differentiating we find, $\frac{\partial M}{\partial Q} = -x$

Strain energy is given by, $U = \int_0^L \frac{M^2 dx}{2EI}$

Therefore, the deflection, $\delta = \frac{\partial U}{\partial Q} = \frac{\partial}{\partial Q}\int_0^L \frac{M^2 dx}{2EI}$

$$= \frac{1}{2EI}\int_0^L \frac{\partial M}{\partial Q}\frac{\partial}{\partial M}M^2 dx$$

$$= \frac{1}{EI}\int_0^L \frac{\partial M}{\partial Q}M\,dx$$

$$= \frac{1}{EI}\int_0^L (-x)\left(-Qx - \frac{wx^2}{2}\right)dx$$

Now setting the imaginary force Q equal to zero, the required expression of the deflection at the free end of the beam becomes,

$$\delta = \frac{w}{2EI}\int_0^L x^3 dx = \frac{wL^4}{8EI} \downarrow \textit{Answer}$$

Free body diagram of the entire beam with an imaginary couple M_0 at the free end is shown below.

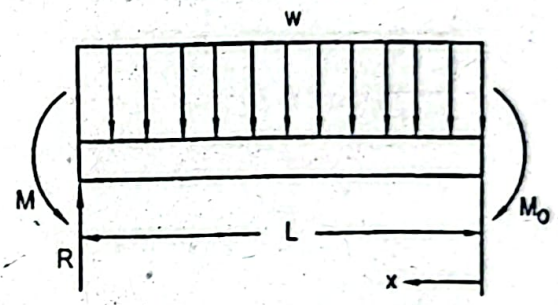

Free body diagram of entire beam

Bending moment, $M = -M_0 - \frac{wx^2}{2}$

Differentiating we find, $\frac{\partial M}{\partial M_0} = -1$

We have an expression of the strain energy,

$$U = \int_0^L \frac{M^2 dx}{2EI}$$

Therefore, the slope at the free end of the beam,

$$\theta = \frac{\partial U}{\partial M_0} = \frac{\partial}{\partial M_0}\int_0^L \frac{M^2 dx}{2EI}$$

$$= \frac{1}{2EI}\int_0^L \frac{\partial M}{\partial M_0}\frac{\partial}{\partial M}M^2 dx$$

$$= \frac{1}{EI}\int \frac{\partial M}{\partial M_0}M\,dx$$

Substituting the values of M and $\frac{\partial M}{\partial M_0}$,

$$\theta = \frac{1}{EI}\int_0^L (-1)\left(-M_0 - \frac{wx^2}{2}\right)dx$$

Now setting the imaginary couple M_0 equal to zero the required expression of the slo

$$\theta = \frac{1}{EI}\int_0^L \frac{wx^2}{2}dx$$

$$= \frac{w}{2EI}\frac{L^3}{3} = \frac{wL^3}{6EI} \quad \textit{Answer}$$

Problem P9.20:

Using Castigliano's theorem, determine the deflection at the point O of the cantil beam with a distributed load as shown in Figure P9.20. Neglect shear.

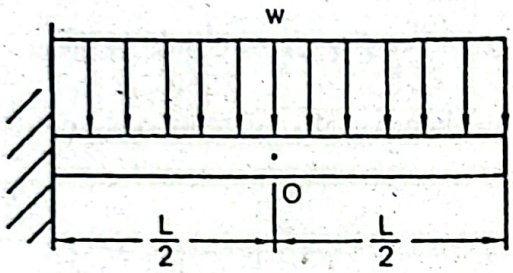

Figure P9.20

Given Data:

Length of beam $= L$

Distributed load $= w$

To Find:

- Deflection at point O, δ

Solution:

Free body diagram of the entire beam is shown below.

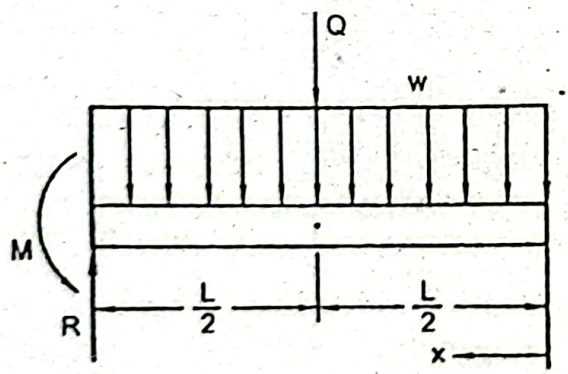

Free body diagram of entire beam

An imaginary load Q is assumed through the point O of the beam.

Bending moment,

For $0 < x < \frac{L}{2}$ $\qquad M = -\frac{wx^2}{2}$ $\qquad (i)$

Bending moment,

For $\frac{L}{2} < x < L$ $\qquad M = -\frac{wx^2}{2}\ e\left(x - \frac{L}{2}\right)$ $\qquad (ii)$

Total strain energy, $U = \int_0^{L/2} \frac{M^2 dx}{2EI} + \int_{L/2}^{L} \frac{M^2 dx}{2EI}$

Deflection is given by, $\delta = \frac{\partial U}{\partial Q} = \frac{\partial}{\partial Q}\int_0^{L/2} \frac{M^2 dx}{2EI} + \frac{\partial}{\partial Q}\int_{L/2}^{L} \frac{M^2 dx}{2EI}$

$$= \frac{1}{2EI}\int_0^{L/2} \frac{\partial M}{\partial Q}\frac{\partial}{\partial M} M^2 dx + \frac{1}{2EI}\int_{L/2}^{L} \frac{\partial M}{\partial Q}\frac{\partial}{\partial M} M^2 dx$$

$$= \frac{1}{EI}\int_0^{L/2} \left(\frac{\partial M}{\partial Q}\right) M dx + \frac{1}{2EI}\int_{L/2}^{L} \left(\frac{\partial M}{\partial Q}\right) M dx \qquad (iii)$$

From Equation (i), for $0 < x < \frac{L}{2}$ $\quad \frac{\partial M}{\partial Q} = 0$

From Equation (ii), for $\frac{L}{2} < x < L$ $\quad \frac{\partial M}{\partial Q} = -\left(x - \frac{L}{2}\right)$

Substituting these values of $\frac{\partial M}{\partial Q}$ and M in Equation (iii),

$$\delta = \frac{1}{EI}\int_0^{L/2} 0 \times \left(\frac{-wx^2}{2}\right) dx + \frac{1}{EI}\int_{L/2}^{L} \left[-\left(x - \frac{L}{2}\right)\right]\left[-\frac{wx^2}{2} - Q\left(x - \frac{L}{2}\right)\right] dx$$

Now setting imaginary force $Q = 0$ the required deflection,

$$\delta = \frac{1}{EI}\int_{L/2}^{L} \left(x - \frac{L}{2}\right)\frac{wx^2}{2} dx$$

$$= \frac{1}{EI}\int_{L/2}^{L} \left(\frac{w}{2}x^3 - \frac{wL}{4}x^2\right) dx$$

$$= \frac{1}{EI}\left[\frac{wx^4}{8} - \frac{wLx^3}{12}\right]_{L/2}^{L}$$

$$= \frac{17wL^4}{384EI} \downarrow \textit{Answer}$$

Problem P9.21:

A stepped cantilever beam supports a concentrated load P at its end as shown in Figure P9.21. Using Castigliano's theorem, find the deflection at the free end. Neglect shear.

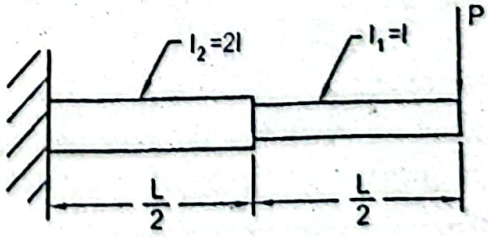

Figure P9.21

Given Data:

Length of beam $= L$

Concentrated load $= P$

To Find:

- Deflection at free end, δ

Solution:

Free body diagram of the entire beam is shown below.

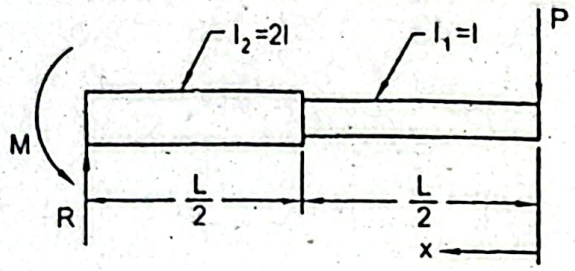

Free body diagram of entire beam

Bending moment, $M = -Px$

Differentiating we find, $\frac{\partial M}{\partial P} = -x$

Strain energy, $U = \int_0^{L/2} \frac{M^2 dx}{2EI_1} + \int_{L/2}^{L} \frac{M^2 dx}{2EI_2}$

Therefore, the deflection at the free end,

$$\delta = \frac{\partial U}{\partial P} = \frac{1}{2EI_1}\int_0^{L/2} \frac{\partial M}{\partial P}\frac{\partial}{\partial M} M^2 dx + \frac{1}{2EI_2}\int_{L/2}^{L} \frac{\partial M}{\partial P}\frac{\partial}{\partial M} M^2 dx$$

$$= \frac{1}{EI_1}\int_0^{L/2} \frac{\partial M}{\partial P} M dx + \frac{1}{EI_2}\int_{L/2}^{L} \frac{\partial M}{\partial P} M dx$$

$$= \frac{1}{EI_1}\int_0^{L/2} (-x)(-Px)\,dx + \frac{1}{EI_2}\int_{L/2}^{L} (-x)(-Px)\,dx$$

$$= \frac{P}{EI}\int_0^{L/2} x^2 dx + \frac{P}{2EI}\int_{L/2}^{L} x^2 dx$$

$$= \frac{PL^3}{24EI} + \frac{P}{6EI}\left(L^3 - \frac{L^3}{8}\right)$$

$$= \frac{PL^3}{24EI} + \frac{7PL^3}{48EI}$$

$$= \frac{9PL^3}{48EI} \downarrow \textit{Answer}$$

Problem P9.22:

A couple M_o is applied at the free end of a cantilever beam as shown in Figure P
Using Castigliano's theorem, determine the deflection at the free end of the beam.

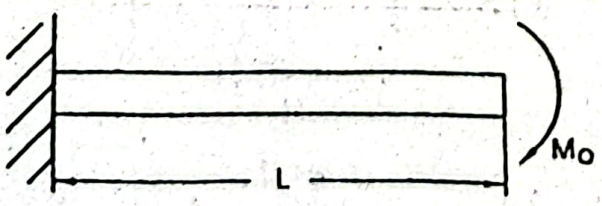

Figure P9.22

n Data:
gth of beam = L
ple = M_o

Find:
flection at free end, δ

ution:
e body diagram of the entire beam is shown below.

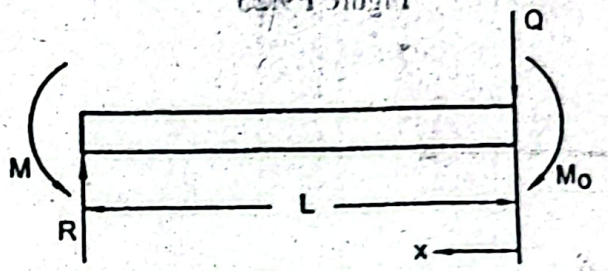

Free body diagram of entire beam

n imaginary force Q is assumed at the free end of the beam.

ending moment, $M = -Qx - M_o$

)ifferentiating we find, $\frac{\partial M}{\partial Q} = -x$

)eflection is given by, $\delta = \frac{\partial U}{\partial Q} = \frac{\partial}{\partial Q}\int_0^L \frac{M^2 dx}{2EI}$

$$= \frac{1}{2EI}\int_0^L \frac{\partial M}{\partial Q}\frac{\partial}{\partial M} M^2 dx$$

$$= \frac{1}{EI}\int_0^L \frac{\partial M}{\partial Q} M\, dx$$

Substituting the values of $\frac{\partial M}{\partial Q}$ and M and setting the imaginary force $Q = 0$ we obtain the required deflection as,

$$\delta = \frac{1}{EI}\int_0^L (-x)(-M_o)\, dx$$

$$= \frac{1}{EI}\int_0^L M_o\, x\, dx$$

$$= \frac{M_o L^2}{2EI} \downarrow \textit{Answer}$$

Problem P9.23:
Find the deflection of the cantilever beam at the free end as shown in Figure P9.23. Use Castigliano's theorem. Neglect shear.

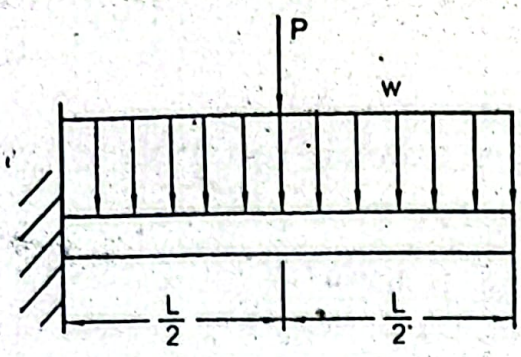

Figure P9.23

Given Data:

Length of beam = L

Concentrated load = P

Distributed load = w

To Find:

- Deflection at free end, δ

Solution:

Free body diagram of the entire beam is shown in the figure below.

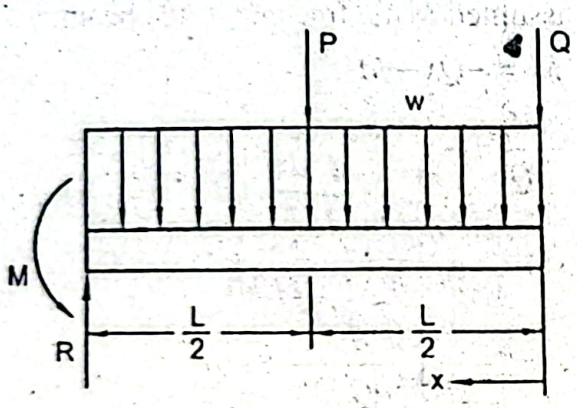

Free body diagram of entire beam

An imaginary force Q is assumed at the free end of the beam.

Bending moment,

For $0 < x < \frac{L}{2}$ $\qquad M = -Qx - \frac{wx^2}{2}$

Differentiating we find, $\qquad \frac{\partial M}{\partial Q} = -x$

Bending moment,

For $\frac{L}{2} < x < L$ $\qquad M = -Qx - \frac{wx^2}{2} - P\left(x - \frac{L}{2}\right)$

Differentiating we find, $\qquad \frac{\partial M}{\partial Q} = -x$

Total strain energy in the beam,

$$U = \int_0^{L/2} \frac{M^2 dx}{2EI} + \int_{L/2}^{L} \frac{M^2 dx}{}$$

flection at the free end, $\delta = \dfrac{\partial U}{\partial Q}$

$$= \int_0^{L/2} \frac{\partial M}{\partial Q}\frac{\partial}{\partial M}\frac{M^2 dx}{2EI} + \int_{L/2}^{L} \frac{\partial M}{\partial Q}\frac{\partial}{\partial M}\frac{M^2 dx}{2EI}$$

$$= \frac{1}{EI}\int_0^{L/2} \frac{\partial M}{\partial Q} M dx + \frac{1}{EI}\int_{L/2}^{L} \frac{\partial M}{\partial Q} M dx$$

$$= \frac{1}{EI}\int_0^{L/2} (-x)\left(-Qx - \frac{wx^2}{2}\right)dx + \frac{1}{EI}\int_{L/2}^{L} (-x)\left[-Qx - \frac{wx^2}{2} - P\left(x - \frac{L}{2}\right)\right]$$

ow setting the imaginary force $Q = 0$ the required deflection becomes,

$$\delta = \frac{1}{EI}\int_0^{L/2} \frac{wx^3}{2}dx + \frac{1}{EI}\int_{L/2}^{L} \left[\frac{wx^3}{2} + P\left(x^2 - \frac{L}{2}x\right)\right]dx$$

$$= \frac{1}{EI}\left[\frac{wx^4}{8}\right]_0^{L/2} + \frac{1}{EI}\left[\frac{wx^4}{8} + \frac{Px^3}{3} - \frac{PLx^2}{4}\right]_{L/2}^{L}$$

$$= \frac{1}{EI}\left[\frac{wL^4}{128} + \frac{wL^4}{8} - \frac{wL^4}{128} + \frac{PL^3}{3} - \frac{PL^3}{24} - \frac{PL^3}{4} + \frac{PL^3}{16}\right]$$

$$= \frac{1}{EI}\left[\frac{wL^4}{8} + \frac{5PL^3}{48}\right]$$

$$= \frac{1}{48EI}\left[6wL^4 + 5PL^3\right]$$ ***Answer***

Problem P9.24:

A simply supported beam carries a distributed load as shown in Figure P9.24. Determine the maximum deflection of the beam. Neglect direct shear.

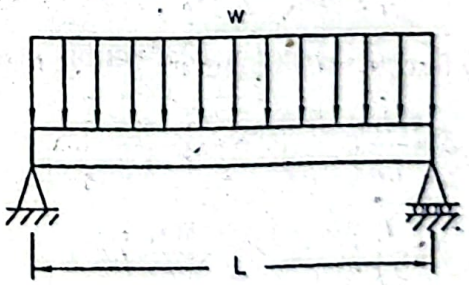

Figure P9.24

Given Data:

Length of beam = L

Distributed load = w

To Find:

- Maximum deflection, δ

Solution:

Free body diagram of the entire beam is shown below.

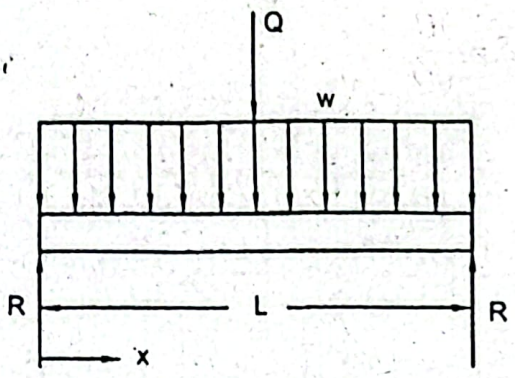

Free body diagram of entire beam

An imaginary force Q is assumed at the mid-section of the beam where the deflection is maximum.

Due to symmetry reaction, $R = \left(\frac{wL}{2} + \frac{Q}{2}\right)$

Bending moment, $M = \left(\frac{wL}{2} + \frac{Q}{2}\right)x - \frac{wx^2}{2}$

Differentiating we find, $\frac{\partial M}{\partial Q} = \frac{x}{2}$

Strain energy, $U = \int_0^L \frac{M^2 dx}{2EI} = 2\int_0^{L/2} \frac{M^2 dx}{2EI} = \frac{1}{EI}\int_0^{L/2} M^2 dx$

Therefore, the deflection, $\delta = \frac{\partial U}{\partial Q} = \frac{1}{EI}\int_0^{L/2} \frac{\partial M}{\partial Q}\frac{\partial}{\partial M} M^2 dx$

$$= \frac{2}{EI}\int_0^{L/2} \frac{\partial M}{\partial Q} M dx$$

$$= \frac{2}{EI}\int_0^{L/2} \left(\frac{x}{2}\right)\left[\left(\frac{wL+Q}{2}\right)x - \frac{wx^2}{2}\right] dx$$

Now setting the imaginary force $Q = 0$ the required deflection becomes,

$$\delta = \frac{2}{EI}\int_0^{L/2} \left(\frac{x}{2}\right)\left[\frac{wL}{2}x - \frac{wx^2}{2}\right] dx$$

$$= \frac{1}{EI}\int_0^{L/2} \left(\frac{wL}{2}x^2 - \frac{wx^3}{2}\right) dx$$

$$= \frac{1}{EI}\left[\frac{wL^4}{48} - \frac{wL^4}{128}\right]$$

$$= \frac{5wL^4}{384} \downarrow \textit{Answer}$$

Problem P9.25:

An overhanged beam supports a concentrated load P at the point C as shown in Figure P9.25. Find the deflection of the point C using Castigliano's theorem. Neglect shear.

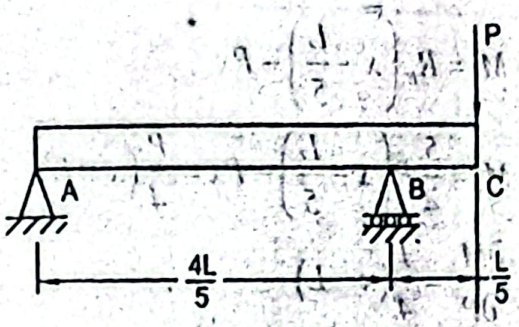

Figure P9.25

Given Data:

Length of beam $= L$

Concentrated load $= P$

To Find:

Deflection of point C, δ_c

Solution:

Free body diagram of the entire beam is shown below.

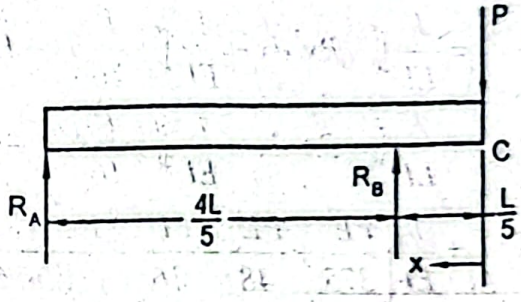

Free body diagram of entire beam

In static equilibrium condition,

$$+\circlearrowleft \sum M_A = 0 :$$

or, $R_B \times \frac{4}{5}L - P \times L = 0$

or, $R_B = \frac{5}{4}P \uparrow$

$$+\uparrow \sum F_y = 0 :$$

or, $R_A + R_B - P = 0$

or, $R_A = P - R_B = P - \frac{5}{4}P = -\frac{1}{4}P$

That is, $R_A = \frac{1}{4}P \downarrow$

Bending moment,

For $0 < x < \frac{L}{5}$ $\quad M = -Px$

Differentiating we find, $\frac{\partial M}{\partial P} = -x$

Bending moment,

For $\frac{L}{5} < x < \frac{4}{5}L$ $\qquad M = R_B\left(x - \frac{L}{5}\right) - Px$

$$\text{or, } M = \frac{5}{4}P\left(x - \frac{L}{5}\right) - Px = \frac{P}{4}(x - L)$$

Differentiating we find, $\frac{\partial M}{\partial P} = \frac{1}{4}(x - L)$

Now the deflection of point C becomes,

$$\delta_c = \frac{\partial U}{\partial P} = \frac{\partial}{\partial P}\int_0^{L/5} \frac{M^2 dx}{2EI} + \frac{\partial}{\partial P}\int_{L/5}^{L} \frac{M^2 dx}{2EI}$$

$$\text{or, } \delta_c = \frac{1}{2EI}\int_0^{L/5} \frac{\partial M}{\partial P}\frac{\partial}{\partial M} M^2 dx + \frac{1}{2EI}\int_{L/5}^{L} \frac{\partial M}{\partial P}\frac{\partial}{\partial M} M^2 dx$$

$$= \frac{1}{EI}\int_0^{L/5} \frac{\partial M}{\partial P} M dx + \frac{1}{EI}\int_{L/5}^{L} \frac{\partial M}{\partial P} M dx$$

$$= \frac{1}{EI}\int_0^{L/5} (-x)(-Px)dx + \frac{1}{EI}\int_{L/5}^{L} \frac{1}{4}(x - L)\frac{P}{4}(x - L)dx$$

$$= \frac{1}{EI}\int_0^{L/5} Px^2 dx + \frac{1}{EI}\int_{L/5}^{L} \frac{P}{16}(x - L)^2 dx$$

$$= \frac{1}{EI}\int_0^{L/5} Px^2 dx + \frac{1}{EI}\int_{L/5}^{L} \frac{P}{16}(x^2 - 2xL + L^2)dx$$

$$= \frac{1}{EI}\left[\frac{PL^3}{375} + \frac{PL^3}{48} - \frac{PL^3}{16} + \frac{PL^3}{16} - \frac{PL^3}{6000} + \frac{PL^3}{400} - \frac{PL^3}{80}\right]dx$$

$$= \frac{PL^3}{75EI} \downarrow \textit{Answer}$$

Problem P9.26:

Determine the deflection of point C of the overhanged beam with a distributed load shown in Figure P9.26. Use Castigliano's theorem. Neglect shear.

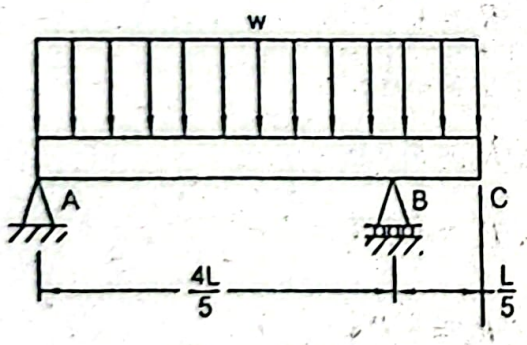

Figure P9.26

Given Data:

Length of beam = L

Distributed load = w

To Find:

- Deflection of point C, δ_c

Solution:

Free body diagram of the entire beam is shown below.

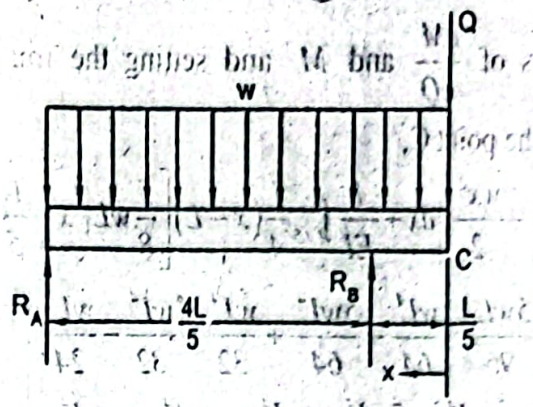

Free body diagram of entire beam

An imaginary force Q is assumed at the point C of the beam.

From static equilibrium condition,

$$+\circlearrowleft \sum M_A = 0 :$$

$$R_B \frac{4}{5}L - Q \times L - wL\frac{L}{2} = 0$$

$$\text{or, } R_B = \left(\frac{5}{8}wL + \frac{5}{4}Q\right)$$

Bending moment,

$$\text{for } 0 < x < \frac{L}{5} \qquad M = -\frac{wx^2}{2} - Qx$$

Differentiating we find, $\frac{\partial M}{\partial Q} = -x$

Bending moment,

$$\text{for } \frac{L}{5} < x < L \qquad M = R_B\left(x - \frac{L}{5}\right) - \frac{wx^2}{2} - Qx$$

$$\text{or, } M = \left(\frac{5}{8}wL + \frac{5}{4}Q\right)\left(x - \frac{L}{5}\right) - \frac{wx^2}{2} - Qx$$

$$= \frac{5}{8}wL\left(x - \frac{L}{5}\right) + \frac{5}{4}Q\left(x - \frac{L}{5}\right) - \frac{wx^2}{2} - Qx$$

$$= \frac{5}{8}wL\left(x - \frac{L}{5}\right) + Q\frac{1}{4}(x - L) - \frac{wx^2}{2}$$

Differentiating we find, $\frac{\partial M}{\partial Q} = \frac{1}{4}(x - L)$

Now the deflection of the point C,

$$\delta_c = \frac{\partial U}{\partial Q} = \frac{\partial}{\partial Q}\int_0^{L/5} \frac{M^2 dx}{2EI} + \frac{\partial}{\partial Q}\int_{L/5}^{L} \frac{M^2 dx}{2EI}$$

$$\text{or, } \delta_c = \frac{1}{2EI}\int_0^{L/5} \frac{\partial M}{\partial Q} M^2 dx + \frac{1}{2EI}\int_{L/5}^{L} \frac{\partial M}{\partial Q} M^2 dx$$

$$= \frac{1}{EI}\int_0^{L/5} \frac{\partial M}{\partial Q} M dx + \frac{1}{EI}\int_{L/5}^{L} \frac{\partial M}{\partial Q} M dx$$

Substituting the values of $\frac{\partial M}{\partial Q}$ and M and setting the imaginary force $Q = 0$ required deflection of the point C,

$$\delta_c = \frac{1}{EI}\int_0^{L/5} (-x)\left(-\frac{wx^2}{2}\right)dx + \frac{1}{EI}\int_{L/5}^{L} \frac{1}{4}(x-L)\left[\frac{5}{8}wL\left(x-\frac{L}{5}\right) - \frac{wx^2}{2}\right]dx$$

$$= \frac{1}{EI}\left[\frac{wL^4}{5000} + \frac{5wL^4}{96} - \frac{wL^4}{64} - \frac{5wL^4}{64} + \frac{wL^4}{32} - \frac{wL^4}{32} - \frac{wL^4}{24} - \frac{5wL^4}{12000} + \frac{wL^4}{1600} + \frac{5wL^4}{1600} - \frac{wL^4}{160} + \frac{wL^4}{20000} - \frac{wL^4}{3000}\right]$$

$$= -\frac{3wL^4}{1000EI}$$

That is, $\delta_C = \frac{3wL^4}{1000EI} \uparrow$ ***Answer***

Problem P9.27:

Using Castigliano's theorem, find the reactions at the supports of the beam with distributed load as shown in Figure P9.27.

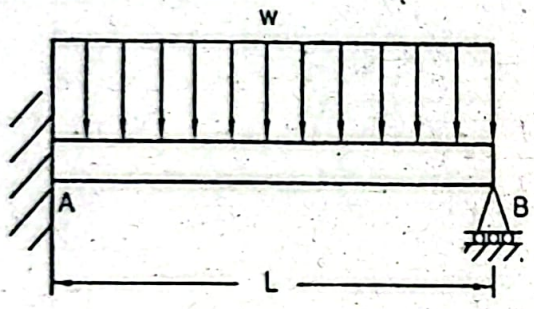

Figure P9.27

Given Data:

Length of beam = L

Distributed load = w

To Find:

- Reactions at A and B, R_A and R_B
- Resisting moment at A, M_A

Solution:

Free body diagram of the entire beam is shown below.

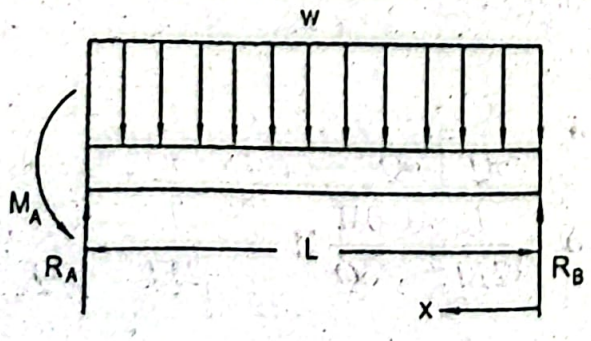

Due to the rigid support the deflection at B will be zero. Let us find the deflection at B first, and then setting its value equal to zero, the reaction at B will be obtained.

Deflection at B,

$$\delta_B = \frac{\partial U}{\partial R_B} = \frac{\partial}{\partial R_B}\int_0^L \frac{M^2 dx}{2EI}$$

$$= \frac{1}{2EI}\int_0^L \frac{\partial M}{\partial R_B}\frac{\partial}{\partial M} M^2 dx$$

$$= \frac{1}{EI}\int_0^L \left(\frac{\partial M}{\partial R_B}\right) M dx \qquad (i)$$

Bending moment at any distance x from the roller support,

$$M = R_B x - \frac{wx^2}{2}$$

Differentiating we find, $\frac{\partial M}{\partial R_B} = x$

Substituting the values of $\frac{\partial M}{\partial R_B}$ and M in Equation (i),

$$\delta_B = \frac{1}{EI}\int_0^L (x)\left(R_B x - \frac{wx^2}{2}\right) dx$$

$$\text{or, } \delta_B = \frac{1}{EI}\int_0^L \left(R_B x^2 - \frac{wx^3}{2}\right) dx$$

$$\text{or, } \delta_B = \frac{1}{EI}\left[\frac{R_B L^3}{3} - \frac{wL^4}{8}\right]$$

Now setting $\delta_B = 0$, $\frac{R_B L^3}{3} - \frac{wL^4}{8} = 0$

$$\text{or, } R_B = \frac{3}{8} wL \uparrow \text{ Answer}$$

In static equilibrium condition,

$$+\uparrow \sum F_v = 0 :$$

$$R_A + R_B - wL = 0$$

$$\text{or, } R_A = wL - R_B$$

$$= wL - \frac{3}{8} wL$$

$$= \frac{5}{8} wL \uparrow \text{ Answer}$$

Again we may write, $+\circlearrowleft \sum M_A = 0 :$

$$M_A + R_B L - \frac{wL^2}{2} = 0$$

$$\text{or, } M_A = \frac{wL^2}{2} - R_B L$$

$$= \frac{wL^2}{2} - \frac{3}{8}wL^2$$

$$= \frac{wL^2}{8} \circlearrowleft \text{ Answer}$$

Problem P9.28:

A beam with fixed supports at both the ends carries a concentrated load at the mid-section of the span as shown in Figure P9.28. Determine the resisting moments using Castigliano's theorem.

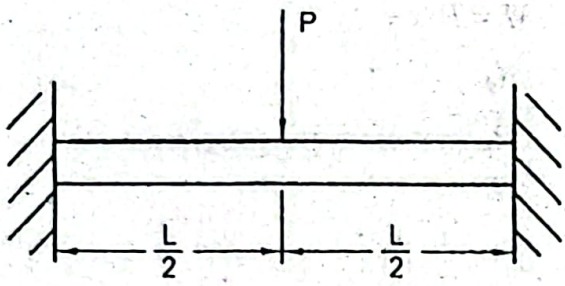

Figure P9.28

Given Data:

Length of beam $= L$

Concentrated load $= P$

To Find:

- Reactions, R and M_0

Solution:

Free body diagram of the entire beam is shown below.

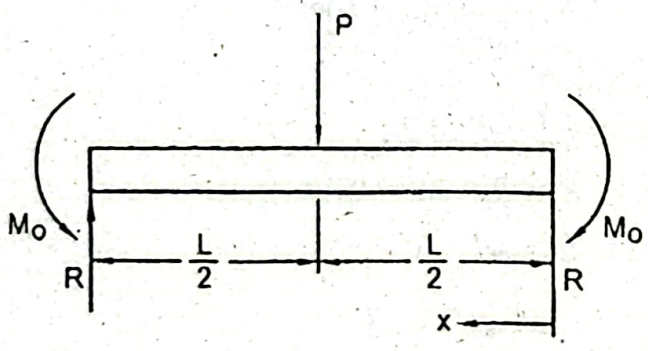

Free body diagram of entire beam

Due to symmetry, $R = \frac{P}{2}$

Bending moment, $M = Rx - M_0 \quad \text{for} 0 < x < \frac{L}{2}$

Differentiating we find, $\frac{\partial M}{\partial R} = x$

Bending moment,

For $\frac{L}{2} < x < L$ $\qquad M = Rx - M_0 - P\left(x - \frac{L}{2}\right)$

Differentiating we obtain, $\frac{\partial M}{\partial R} = x$

Deflection at the point of reaction,

$$\delta = \frac{\partial U}{\partial R} = \frac{\partial}{\partial R}\int_0^{L/2}\frac{M^2dx}{2EI} + \frac{\partial}{\partial R}\int_{L/2}^{L}\frac{M^2dx}{2EI}$$

$$= \frac{1}{2EI}\int_0^{L/2}\frac{\partial M}{\partial R}\frac{\partial}{\partial M}M^2dx + \frac{1}{2EI}\int_{L/2}^{L}\frac{\partial M}{\partial R}\frac{\partial}{\partial M}M^2dx$$

$$= \frac{1}{EI}\int_0^{L/2}\frac{\partial M}{\partial R}Mdx + \frac{1}{EI}\int_{L/2}^{L}\frac{\partial M}{\partial R}Mdx$$

$$= \frac{1}{EI}\int_0^{L/2}(x)(-M_0 + Rx)dx + \frac{1}{EI}\int_{L/2}^{L}(x)\left[Rx - M_0 - P\left(x - \frac{L}{2}\right)\right]dx$$

$$= \frac{1}{EI}\int_0^{L/2}\left(-M_0x + Rx^2\right)dx + \frac{1}{EI}\int_{L/2}^{L}\left(Rx^2 - M_0x - Px^2 + \frac{PL}{2}x\right)dx$$

$$= \frac{1}{EI}\left[-\frac{M_0L^2}{8} + \frac{RL^3}{24} + \frac{RL^3}{3} - \frac{M_0L^2}{2} - \frac{PL^3}{3} + \frac{PL^3}{4} - \frac{RL^3}{24} + \frac{M_0L^2}{8} + \frac{PL^3}{24} - \frac{PL^3}{16}\right]$$

$$= \frac{1}{EI}\left[-\frac{M_0L^2}{2} + \frac{RL^3}{3} - \frac{5L^3}{48}\right]$$

Since the deflection at the point of reaction is zero, we can write,

$$-\frac{M_0L^2}{2} + \frac{RL^3}{3} - \frac{5L^3}{48} = 0$$

or, $-\frac{M_0L^2}{2} + \frac{PL^3}{6} - \frac{5L^3}{48} = 0$ (Since $R = P/2$)

or, $-\frac{M_0L^2}{2} + \frac{3PL^3}{48} = 0$

or, $\frac{M_0}{2} = \frac{3PL}{48}$

or, $M_0 = \frac{PL}{8}$ ∪ *Answer*

Here the resisting moment M_0 is at the right side. Resisting moments at both ends are same due to symmetry.

Problem P9.29:

A truss consisting of two members each of the same material and cross-section supports a load P at B as shown in Figure P9.29. Find the horizontal and vertical deflections of the point B using Castigliano's theorem.

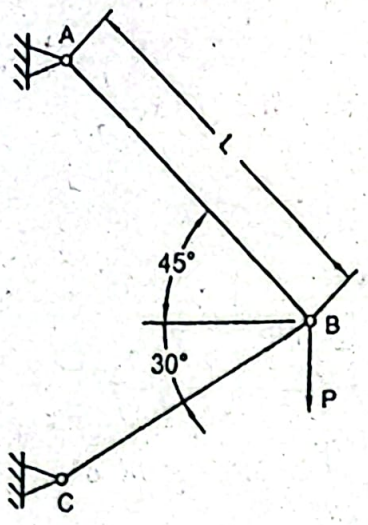

Figure P9.29

Given Data:

Load = P

Cross-sectional area of member = A

Length of member AB, $L_{AB} = L$

To Find:

- Horizontal deflection of point B, δ_{xB}
- Vertical deflection of point B, δ_{yB}

Solution:

An imaginary force Q is considered in the horizontal direction as shown in the following figure.

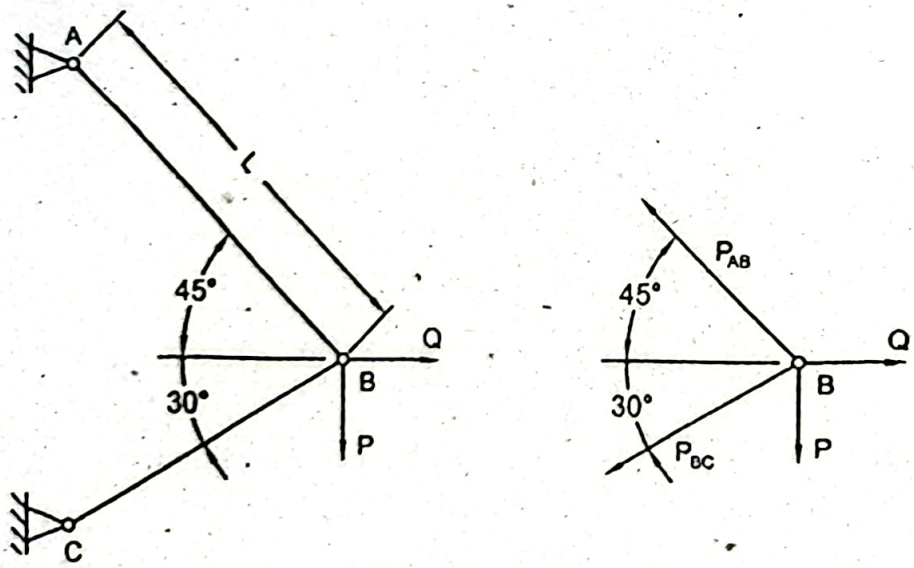

In static equilibrium condition from the free body diagram for the joint B as shown in the above figure,

$$+\uparrow \sum F_y = 0 :$$

$$-P_{AB} \sin 45^0 - P_{BC} \sin 30^0 - P = 0 \qquad (i)$$

$$+\rightarrow \sum F_x = 0 :$$

$$-r_{AB}\cos 45^{0} - P_{BC}\cos 30^{0} + Q = 0 \qquad (ii)$$

Adding Equations (i) and (ii) and simplifying,

$$P_{BC} = 0.732Q - 0.732P \qquad (iii)$$

Substituting the value of P_{BC} in Equation(i),

$$P_{AB}\sin 45^{0} - (0.732Q - 0.732P)\sin 30^{0} - P = 0$$

$$\text{or, } P_{AB} = 0.518Q + 0.897P \qquad (iv)$$

Deflection in the horizontal direction, $\delta_{xB} = \dfrac{\partial U}{\partial Q}$

Deflection in the vertical direction, $\delta_{yB} = \dfrac{\partial U}{\partial P}$

Total strain energy, $U = \dfrac{P_{AB}^2 L_{AB}}{2AE} + \dfrac{P_{BC}^2 L_{BC}}{2AE}$

Therefore, $\delta_{xB} = \dfrac{\partial U}{\partial Q} = \dfrac{\partial P_{AB}}{\partial Q}\dfrac{\partial}{\partial P_{AB}}\left[\dfrac{P_{AB}^2 L_{AB}}{2AE}\right] + \dfrac{\partial P_{BC}}{\partial Q}\dfrac{\partial}{\partial P_{BC}}\left[\dfrac{P_{BC}^2 L_{BC}}{2AE}\right]$

$$\text{or, } \delta_{xB} = \frac{P_{AB}L_{AB}}{AE}\frac{\partial P_{AB}}{\partial Q} + \frac{P_{BC}L_{BC}}{AE}\frac{\partial P_{BC}}{\partial Q} \qquad (v)$$

Similarly, $\delta_{yB} = \dfrac{\partial U}{\partial P} = \dfrac{P_{AB}L_{AB}}{AE}\dfrac{\partial P_{AB}}{\partial P} + \dfrac{P_{BC}L_{BC}}{AE}\dfrac{\partial P_{BC}}{\partial P} \qquad (vi)$

Differentiating Equations (iii) and(iv),

$$\frac{\partial P_{BC}}{\partial Q} = 0.732 \text{ and } \frac{\partial P_{BC}}{\partial P} = -0.732$$

$$\frac{\partial P_{AB}}{\partial Q} = 0.518 \text{ and } \frac{\partial P_{AB}}{\partial P} = 0.897$$

Length of the member AB, $L_{AB} = L$

Length of the member BC, $L_{BC} = L_{AB}\dfrac{\cos 45^{0}}{\cos 30^{0}} = L \times \dfrac{\cos 45^{0}}{\cos 30^{0}} = 0.8172L$

Setting the imaginary force $Q = 0$ in Equations (iii) and(iv),

$$P_{BC} = -0.732P \text{ and } P_{AB} = 0.897P$$

Substituting these values in Equations (v) and(vi) we obtain the required deflections;

$$\delta_{xB} = \frac{(0.897P)\times L}{AE}\times 0.518 + \frac{(-0.732P)\times 0.817L}{AE}\times 0.732$$

$$= \frac{0.027PL}{AE} \textit{ Answer}$$

$$\text{and, } \delta_{yB} = \frac{(0.897P)\times L}{AE}\times 0.897 + \frac{(-0.732P)\times 0.817L}{AE}\times(-0.732)$$

$$= \frac{1.242PL}{AE}\downarrow \textit{ Answer}$$

Problem P9.30:

A curved bar of circular shape supports a vertical load P at its free end as shown in Figure P9.30. Determine the horizontal and vertical deflections of the point B using Castigliano's theorem.

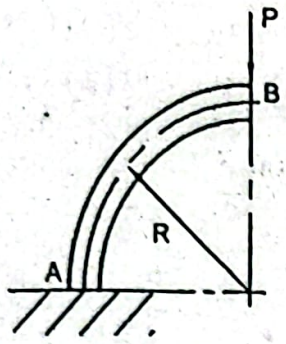

Figure P9.30

Given Data:

Load $= P$

Radius of bar $= R$

To Find:

- Horizontal deflection of point B, δ_{x_B}
- Vertical deflection of point B, δ_{y_B}

Solution:

An imaginary force Q is considered in the horizontal direction as shown in the following figure.

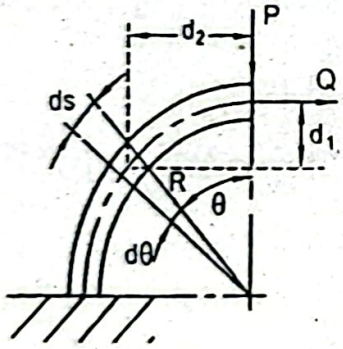

Elemental length, $ds = Rd\theta$

Distance, $d_1 = R - R\cos\theta = R(1-\cos\theta)$

Distance, $d_2 = R\sin\theta$

Bending moment at the differential element,

$$M = Pd_2 + Qd_1$$

$$\text{or, } M = PR\sin\theta + QR(1-\cos\theta) \qquad (i)$$

Differentiating, $\dfrac{\partial M}{\partial P} = R\sin\theta$ and $\dfrac{\partial M}{\partial Q} = R(1-\cos\theta)$

Vertical deflection, $\delta_{y_B} = \dfrac{\partial U}{\partial P}$ and horizontal deflection, $\delta_{x_B} = \dfrac{\partial U}{\partial Q}$

Now the vertical deflection,

$$\delta_{vB} = \frac{\partial U}{\partial P} = \frac{\partial}{\partial P}\int \frac{M^2 ds}{2EI}$$

$$= \frac{1}{2EI}\int_0^{\pi/2} \frac{\partial M}{\partial P}\frac{\partial}{\partial M} M^2 R d\theta$$

$$= \frac{R}{EI}\int_0^{\pi/2} \frac{\partial M}{\partial P} M d\theta$$

tting the imaginary force $Q = 0$ in Equation (i) and substituting the values of $\frac{\partial M}{\partial P}$ d M we find,

$$\delta_{vB} = \frac{R}{EI}\int_0^{\pi/2} (R\sin\theta)(PR\sin\theta) d\theta$$

$$= \frac{PR^3}{EI}\int_0^{\pi/2} \sin^2\theta d\theta$$

$$= \frac{PR^3}{EI}\left[\frac{\theta}{2} - \frac{\sin 2\theta}{4}\right]_0^{\pi/2}$$

$$= \frac{PR^3}{EI}\frac{\pi}{4} = \frac{PR^3\pi}{4EI} \downarrow \textit{Answer}$$

orizontal deflection,

$$\delta_{xB} = \frac{\partial U}{\partial Q} = \frac{\partial}{\partial Q}\int \frac{M^2 ds}{2EI}$$

$$= \frac{1}{2EI}\int_0^{\pi/2} \frac{\partial M}{\partial Q}\frac{\partial}{\partial M} M^2 R d\theta$$

$$= \frac{R}{EI}\int_0^{\pi/2} \frac{\partial M}{\partial Q} M\, d\theta$$

Now setting the imaginary force $Q = 0$ in Equation (i) and substituting the values of $\frac{\partial M}{\partial Q}$ and M we find,

$$\delta_{xB} = \frac{R}{EI}\int_0^{\pi/2} R(1-\cos\theta) PR\sin\theta d\theta$$

$$= \frac{PR^3}{EI}\int_0^{\pi/2} \sin\theta(1-\cos\theta) d\theta$$

$$= \frac{PR^3}{EI}\int_0^{\pi/2} \sin\theta(1-\sin\theta\cos\theta) d\theta$$

$$= \frac{PR^3}{EI}\left[-\cos\theta - \frac{1}{2}\sin^2\theta\right]_0^{\pi/2}$$

$$= \frac{PR^3}{EI}\left[-\frac{1}{2}\sin^2\frac{\pi}{2} + \cos 0^0 + \frac{1}{2}\sin^2 0^0\right]$$

$$= \frac{PR^3}{EI}\left[-\frac{1}{2} + 1\right] = \frac{PR^3}{2EI} \rightarrow \textit{Answer}$$

Problem P9.31:

A bar of semi-circular shape of radius R in the horizontal plane is subjected to concentrated load P at its free end as shown in Figure P9.31. Determine the deflection at the free end of the bar using Castigliano's theorem.

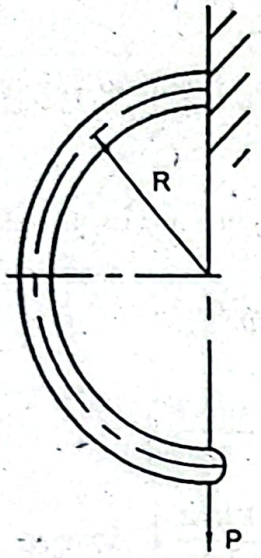

Figure P9.31

Given Data:

Radius of bar $= R$

Concentrated load $= P$

To Find:

- Deflection at free end, δ

Solution:

The figure below shows a differential element ds at an angle of θ.

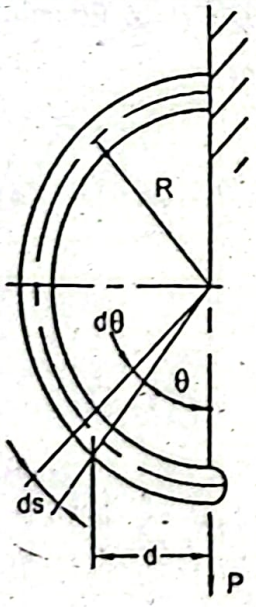

An elemental length, $ds = Rd\theta$

Distance, $d = R\sin\theta$

Bending moment at the differential element,

$$M = P \times d = PR\sin\theta$$

Differentiating we find, $\frac{\partial M}{\partial P} = R\sin\theta$

Strain energy, $U = \int \frac{M^2 ds}{2EI}$

Therefore, the deflection, $\delta = \frac{\partial U}{\partial P} = \frac{1}{2EI}\int \frac{\partial M}{\partial P}\frac{\partial}{\partial M}M^2 Rd\theta$

$$= \frac{R}{EI}\int_0^{\pi} \frac{\partial M}{\partial P} Md\theta$$

Now substituting the values of $\frac{\partial M}{\partial P}$ and M we obtain,

$$\delta = \frac{R}{EI}\int_0^{\pi} R\sin\theta\, PR\sin\theta d\theta$$

$$= \frac{PR^3}{EI}\int_0^{\pi} \sin^2\theta d\theta$$

$$= \frac{PR^3}{EI}\left[\frac{\theta}{2} - \frac{1}{4}\sin 2\theta\right]_0^{\pi} = \frac{PR^3\pi}{2EI} \quad \textit{Answer}$$

Problem P9.32:

A moment M_0 is applied at the free end of a curved bar of circular shape with radius R as shown in Figure P9.32. Determine the horizontal and vertical deflections at the free end of the curved bar using Castigliano's theorem.

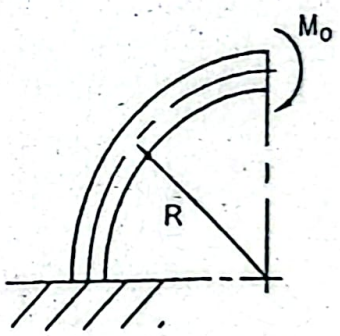

Figure P9.32

Given Data:

Radius $= R$

Couple $= M_0$

To Find:

- Horizontal deflection, δ_x
- Vertical deflection, δ_y

Solution:

To find the vertical deflection an imaginary force Q is considered in the vertical direction as shown in the following figure.

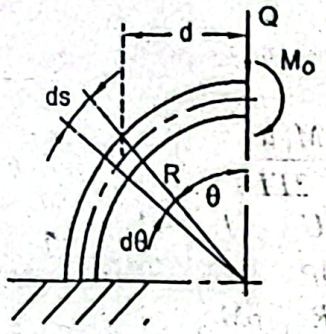

Distance, $d = R\sin\theta$

Bending moment at the differential element,

$$M = -Qd - M_0 = -QR\sin\theta - M_0$$

Differentiating we find, $\frac{\partial M}{\partial Q} = -R\sin\theta$

Deflection, $$\delta = \frac{\partial U}{\partial Q} = \frac{\partial}{\partial Q}\int\frac{M^2 ds}{2EI}$$

$$= \frac{1}{2EI}\int_0^{\pi/2}\frac{\partial M}{\partial Q}M^2 Rd\theta$$

$$= \frac{R}{EI}\int_0^{\pi/2}\frac{\partial M}{\partial Q}Md\theta$$

Substituting the values of $\frac{\partial M}{\partial Q}$ and M and setting the imaginary force $Q = 0$,

$$\delta = \frac{R}{EI}\int_0^{\pi/2}(-R\sin\theta)(-M_0)dx$$

$$= \frac{R^2 M_0}{EI}\int_0^{\pi/2}\sin\theta d\theta$$

$$= \frac{M_0 R^2}{EI}[-\cos\theta]_0^{\pi/2} = \frac{M_0 R^2}{EI}\downarrow \textit{Answer}$$

Now to find the horizontal deflection, an imaginary force Q is considered in the horizontal direction as shown in the figure below.

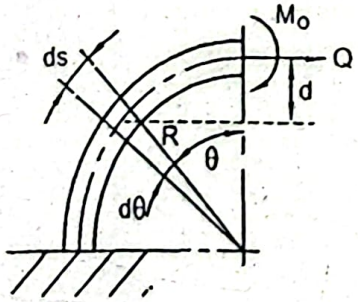

Distance, $d = R - R\cos\theta = R(1-\cos\theta)$

Moment, $M = -Qd - M_0$

or, $M = -QR(1-\cos\theta) - M_0$

Differentiating we find, $\frac{}{\partial Q} = -R(1-\cos\theta)$

Deflection, $$\delta_x = \frac{\partial U}{\partial Q} = \frac{\partial}{\partial Q}\int\frac{M^2 ds}{2EI}$$

$$= \frac{1}{2EI}\int_0^{\pi/2}\frac{\partial M}{\partial Q}\frac{\partial}{\partial M}M^2 R d\theta$$

$$= \frac{R}{EI}\int_0^{\pi/2}\frac{\partial M}{\partial Q}M d\theta$$

Now substituting the values of $\frac{\partial M}{\partial Q}$ and M and setting the imaginary force $Q=0$,

$$\delta_x = \frac{R}{EI}\int_0^{\pi/2}\left[-R(1-\cos\theta)\right](-M_0)d\theta$$

$$= \frac{M_0 R^2}{EI}\int_0^{\pi/2}(1-\cos\theta)d\theta$$

$$= \frac{M_0 R^2}{EI}\left[\theta-\sin\theta\right]_0^{\pi/2}$$

$$= \frac{M_0 R^2}{EI}\left(\frac{\pi}{2}-1\right) \rightarrow \textit{Answer}$$

Problem P9.33:

A cantilever frame ABC supports a vertical load at the point C as shown in Figure P9.33. Assuming the flexural rigidity EI to be constant throughout the frame, determine the horizontal and vertical deflections of the point C. Neglect axial deformations.

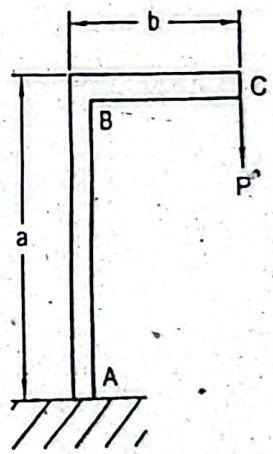

Figure P9.33

Given Data:

Load = P

Flexural rigidity EI is constant

To Find:

- Vertical deflection of point C, δ_{yC}
- Horizontal deflection of point C, δ_{xC}

Solution:

An imaginary force Q is considered in the horizontal direction at the point C as shown in the following figure.

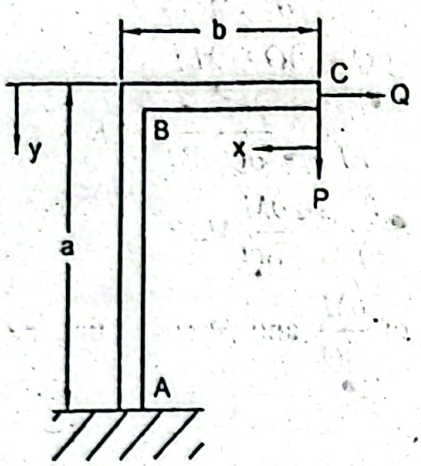

Bending moment in BC portion of the frame,

$$M_{BC} = Px \qquad (i)$$

Force Q makes an axial deformation in BC portion which is neglected.

Bending moment in AB portion of the frame,

$$M_{AB} = Pb + Qy \qquad (ii)$$

Differentiating Equation(i),

$$\frac{\partial M_{BC}}{\partial Q} = 0 \text{ and } \frac{\partial M_{BC}}{\partial P} = x$$

Differentiating Equation(ii),

$$\frac{\partial M_{AB}}{\partial Q} = y \text{ and } \frac{\partial M_{AB}}{\partial P} = b$$

Total strain energy, $U = U_{AB} + U_{BC}$

$$\text{or, } U = \int \frac{M_{AB}^2 dy}{2EI} + \int \frac{M_{BC}^2 dx}{2EI}$$

Horizontal deflection of the point C,

$$\delta_{xC} = \frac{\partial U}{\partial Q} = \frac{\partial}{\partial Q}\int \frac{M_{AB}^2 dy}{2EI} + \frac{\partial}{\partial Q}\int \frac{M_{BC}^2 dx}{2EI}$$

$$= \frac{1}{2EI}\int \frac{\partial M_{AB}}{\partial Q}\frac{\partial}{\partial M_{AB}} M_{AB}^2 dy + \frac{1}{2EI}\int \frac{\partial M_{BC}}{\partial Q}\frac{\partial}{\partial M_{BC}} M_{BC}^2 dx$$

$$= \frac{1}{EI}\int \frac{\partial M_{AB}}{\partial Q} M_{AB} dy + \frac{1}{EI}\int \frac{\partial M_{BC}}{\partial Q} M_{BC} dx$$

$$= \frac{1}{EI}\int_0^a y(Pb + Qy) dy + \frac{1}{EI}\int 0 \times M_{BC} dx$$

Now setting the imaginary force $Q = 0$,

$$\delta_{xC} = \frac{Pb}{EI}\int_0^a y dy = \frac{Pba^2}{2EI} \rightarrow \textit{Answer}$$

Vertical deflection of the point C,

$$\delta_{vC} = \frac{\partial U}{\partial P} = \frac{\partial}{\partial P}\int \frac{M_{AB}^2 dy}{2EI} + \frac{\partial}{\partial P}\int \frac{M_{BC}^2 dx}{2EI}$$

$$= \frac{1}{2EI}\int \frac{\partial M_{AB}}{\partial P}\frac{\partial}{\partial M_{AB}} M_{AB}^2 dy + \frac{1}{2EI}\int \frac{\partial M_{BC}}{\partial P}\frac{\partial}{\partial M_{BC}} M_{BC}^2 dx$$

$$= \frac{1}{EI}\int_0^a \frac{\partial M_{AB}}{\partial P} M_{AB}\, dy + \frac{1}{EI}\int_0^b \frac{\partial M_{BC}}{\partial P} M_{BC}\, dx$$

$$= \frac{1}{EI}\int_0^a b(Pb + Qy)dy + \frac{1}{EI}\int_0^b xPx dx$$

Now setting the imaginary force $Q = 0$,

$$\delta_{vC} = \frac{1}{EI}\int_0^a Pb^2 dy + \frac{P}{EI}\int_0^b x^2 dx$$

$$= \frac{Pb^2 a}{EI} + \frac{Pb^3}{3EI}$$

$$= \frac{Pb^2}{EI}\left(a + \frac{b}{3}\right) \downarrow \textit{Answer}$$

Problem P9.34:

A frame having the constant flexural rigidity throughout supports a load P as shown in Figure P9.34. Find the horizontal deflection of the point C using Castigliano's theorem.

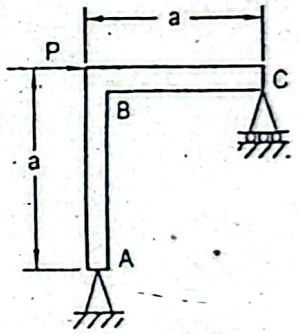

Figure P9.34

Given Data:

Load $= P$

Flexural rigidity EI is constant

To Find:

Horizontal deflection of point C, δ_{vC}

Solution:

A reaction in the roller support of the frame is shown in the figure below.

Let R is the reaction at the roller support.

In static equilibrium condition,

$$+\circlearrowleft \sum M_A = 0:$$

$$R \times a - P \times a = 0$$

or, $R = P$

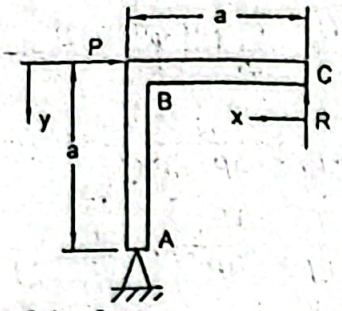

Bending moment in BC portion of the frame,

$$M_{BC} = Rx = Px \qquad (i$$

Bending moment in AB portion of the frame,

$$M_{AB} = Ra - Py = (Pa - Py) \qquad (ii$$

Deflection in the horizontal direction of the point C,

$$\delta_{xC} = \frac{\partial U}{\partial P} \qquad \text{(Load } P \text{ acts along BC of the frame)}$$

$$= \frac{\partial}{\partial P}\int_0^a \frac{M_{AB}^2 dy}{2EI} + \frac{\partial}{\partial P}\int_0^a \frac{M_{BC}^2 dx}{2EI}$$

$$= \frac{1}{2EI}\int_0^a \frac{\partial M_{AB}}{\partial P}\frac{\partial}{\partial M_{AB}} M_{AB}^2 dy + \frac{1}{2EI}\int_0^a \frac{\partial M_{BC}}{\partial P}\frac{\partial}{\partial M_{BC}} M_{BC}^2 dx$$

$$= \frac{1}{EI}\int_0^a \frac{\partial M_{AB}}{\partial P} M_{AB}\, dy + \frac{1}{EI}\int_0^a \frac{\partial M_{BC}}{\partial P} M_{BC}\, dx \qquad (iii)$$

From Equation (i), $\dfrac{\partial M_{BC}}{\partial P} = x$

From Equation (ii), $\dfrac{\partial M_{AB}}{\partial P} = (a - y)$

Now substituting the values in Equation (iii) we find,

$$\delta_{xC} = \frac{1}{EI}\int_0^a P(a-y)(a-y)dy + \frac{1}{EI}\int_0^a Px^2 dx$$

$$= \frac{P}{EI}\int_0^a (a^2 - 2ay + y^2)dy + \frac{P}{EI}\int_0^a Px^2 dx$$

$$= \frac{P}{EI}\left[a^3 - 2a\frac{a^2}{2} + \frac{a^3}{3}\right] + \frac{P}{EI}\frac{a^3}{3}$$

$$= \frac{Pa^3}{3EI} + \frac{Pa^3}{3EI}$$

$$= \frac{2Pa^3}{3EI} \rightarrow \textit{Answer}$$

Problem P9.35:

A plane stress element is shown in Figure P9.35 for a steel machine component. If the yield strength for this material is $250MPa$, determine the factor of safety using (a) the maximum normal stress theory, (b) the maximum shear stress theory and (c) the maximum distortion energy theory.

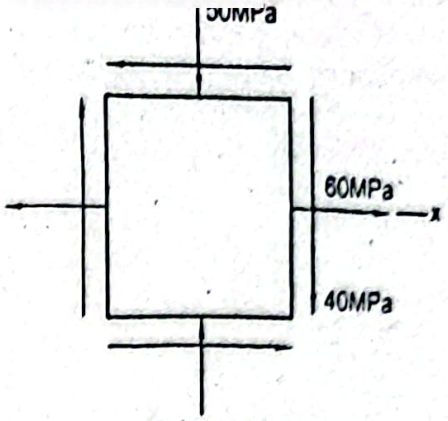

Figure P9.35

Given Data:

Normal stress, $\sigma_x = 60MPa$

Normal stress, $\sigma_y = -50MPa$

Shearing stress, $\tau_{xy} = 40MPa$

Yield strength, $S_y = 250MPa$

To Find:

-Safety factor using maximum normal stress theory, n

-Safety factor using maximum shear stress theory, n

-Safety factor using maximum distortion energy theory, n

Solution:

Principal stresses, $$\sigma_1, \sigma_2 = \frac{\sigma_x + \sigma_y}{2} \pm \sqrt{\left(\frac{\sigma_x - \sigma_y}{2}\right)^2 + \tau_{xy}^2}$$

$$= \frac{60 - 50}{2} \pm \sqrt{\left(\frac{60 + 50}{2}\right)^2 + 40^2}$$

$$= 5 \pm 68.01$$

Therefore, $\sigma_1 = 73.01MPa$

and, $\sigma_2 = -63.01MPa$

Maximum shearing stress, $$\tau_{max} = \pm\sqrt{\left(\frac{\sigma_x - \sigma_y}{2}\right)^2 + \tau_{xy}^2}$$

$$= \pm\sqrt{\left(\frac{60 + 50}{2}\right)^2 + 40^2}$$

$$= 68.01MPa$$

(a) According to the maximum normal stress theory,

$$\sigma_1 = \frac{S_y}{n}$$

$$\text{or, } n = \frac{S_y}{\sigma_1} = \frac{250}{73.01} = 3.42 \text{ Answer}$$

(b) According to the maximum shearing stress theory,

$$\tau_{max} = \frac{S_y}{2n}$$

$$\text{or, } n = \frac{S_y}{2 \times \tau_{max}}$$

$$= \frac{250}{2 \times 68.01} = 1.84 \text{ Answer}$$

(c) According to the maximum distortion energy theory,

$$\sigma' = \sqrt{\sigma_A^2 - \sigma_A \sigma_B + \sigma_B^2}$$

Now writing $\sigma_A = \sigma_1$, $\sigma_B = \sigma_2$ and $\sigma' = \frac{S_y}{n}$ we find,

$$\frac{S_y}{n} = \sqrt{\sigma_1^2 - \sigma_1 \sigma_2 + \sigma_2^2}$$

$$\text{or, } \frac{250}{n} = \sqrt{(73.01)^2 - (73.01)(-63.01) + (63.01)^2}$$

$$\text{or, } n = 2.12 \text{ Answer}$$

Problem P9.36:

A plane stress element is shown in Figure P9.36. If the yield strength $S_y = 350MPa$, determine the factor of safety using (a) the maximum normal stress theory, (b) the maximum shear stress theory and (c) the maximum distortion energy theory.

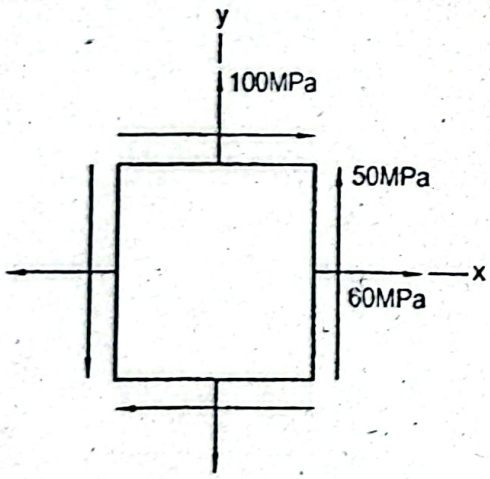

Figure P9.36

Given Data:

Normal stress, $\sigma_x = 60MPa$

Normal stress, $\sigma_y = 100MPa$

Shearing stress, $\tau_{xy} = 50MPa$

Yield strength, $S_y = 350MPa$

To find:
-Safety factor using maximum normal stress theory, n
-Safety factor using maximum shear stress theory, n
-Safety factor using maximum distortion energy theory, n

Solution:

Principal stresses, $$\sigma_1, \sigma_2 = \frac{\sigma_x + \sigma_y}{2} \pm \sqrt{\left(\frac{\sigma_x - \sigma_y}{2}\right)^2 + \tau_{xy}^2}$$

$$= \frac{60+100}{2} \pm \sqrt{\left(\frac{60-100}{2}\right)^2 + 50^2}$$

Therefore, $$\sigma_1 = 133.85MPa$$

and, $$\sigma_2 = 26.15MPa$$

Maximum shearing stress $$\tau_{max} = \pm\sqrt{\left(\frac{\sigma_x - \sigma_y}{2}\right)^2 + \tau_{xy}^2}$$

$$= \pm\sqrt{\left(\frac{60-100}{2}\right)^2 + 50^2}$$

$$= 53.85MPa$$

(a) According to the maximum normal stress theory,

$$\sigma_1 = \frac{S_y}{n}$$

or, $$133.85 = \frac{350}{n}$$

or, $$n = 2.62 \quad Answer$$

(b) According to the maximum shearing stress theory,

$$\tau_{max} = \frac{S_y}{2n}$$

or, $$n = \frac{S_y}{2 \times \tau_{max}}$$

$$= \frac{350}{2 \times 53.85} = 3.25 \quad Answer$$

(c) According to the maximum distortion energy theory,

$$\sigma' = \sqrt{\sigma_A^2 - \sigma_A\sigma_B + \sigma_B^2}$$

Now writing $\sigma_A = \sigma_1$, $\sigma_B = \sigma_2$ and $\sigma' = \frac{S_y}{n}$ we find,

$$\frac{S_y}{n} = \sqrt{\sigma_1^2 - \sigma_1\sigma_2 + \sigma_2^2}$$

or, $$\frac{S_y}{n} = \sqrt{(133.85)^2 - (133.85)(26.15) + (26.15)^2}$$

$$\text{or, } \frac{S_y}{n} = 122.88$$

$$\text{or, } n = \frac{350}{122.88} = 2.85 \text{ Answer}$$

Problem P9.37:

A stress element of a machine component is shown in Figure P9.37. Yield strength of machine component material is $300MPa$ and the factor of safety based on the yield strength is 2.0. Determine the value of normal stress σ_0 using (a) the maximum normal stress theory, (b) the maximum shear stress theory and (c) the maximum distortion energy theory.

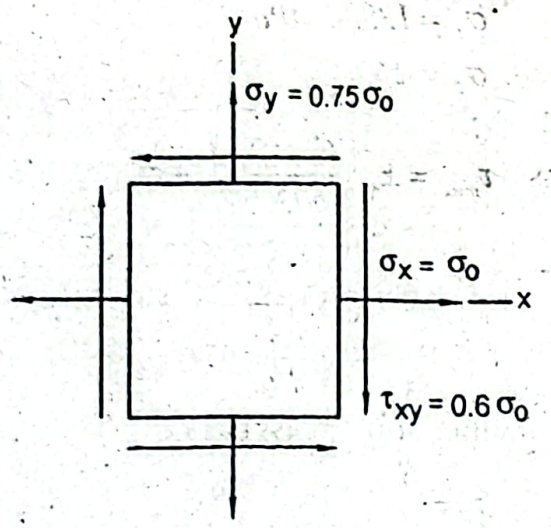

Figure P9.37

Given Data:

Normal stress, $\sigma_x = \sigma_0$

Normal stress, $\sigma_y = 0.75\sigma_0$

Shearing stress, $\tau_{xy} = 0.6\sigma_0$

Yield strength, $S_y = 300MPa$

Safety factor, $n = 2.0$

To Find:

- Value of σ_0 using maximum normal stress theory
- Value of σ_0 using maximum shear stress theory
- Value of σ_0 using maximum distortion energy theory

Solution:

Mohr's circle of the stress element is given in the figure below.

Distance between τ-axis and the center of Mohr's circle,

$$C = \frac{\sigma_x + \sigma_y}{2} = \frac{\sigma_0 + 0.75\sigma_0}{2} = 0.875\sigma_0$$

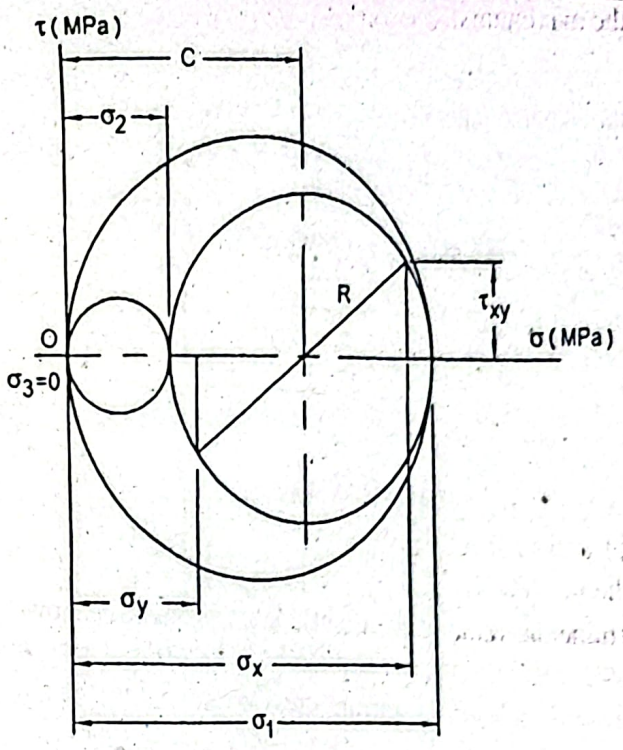

Radius of Mohr's circle, $R = \sqrt{\left(\frac{\sigma_x - \sigma_y}{2}\right)^2 + \tau_{xy}^2}$

$$= \sqrt{\left(\frac{\sigma_0 - 0.75\sigma_0}{2}\right)^2 + (0.6\sigma_0)^2}$$

$$= 0.613\sigma_0$$

Principal stresses, $\sigma_1 = C + R = (0.875\sigma_0 + 0.613\sigma_0) = 1.488\sigma_0$

and, $\sigma_2 = C - R = (0.875\sigma_0 - 0.613\sigma_0) = 0.262\sigma_0$

Here the maximum shearing stress,

$$\tau_{max} = \frac{|\sigma_1|}{2} = \frac{|1.488\sigma_0|}{2} = 0.744\sigma_0$$

(a) According to the maximum normal stress theory,

$$\sigma_1 = \frac{S_y}{n}$$

$$\text{or, } 1.488\sigma_0 = \frac{300}{2}$$

$$\text{or, } \sigma_0 = 100.81MPa \text{ Answer}$$

(b) According to the maximum shear stress theory,

$$\tau_{max} = \frac{S_y}{2n}$$

$$\text{or, } 0.744\sigma_0 = \frac{300}{2\times 2}$$

$$\text{or, } \sigma_0 = 100.81MPa \text{ Answer}$$

(c) According to the maximum distortion energy theory,

$$\sigma' = \sqrt{\sigma_A^2 - \sigma_A \sigma_B + \sigma_B^2}$$

Now writing $\sigma' = \frac{S_y}{n}$, $\sigma_A = \sigma_1$ and $\sigma_B = \sigma_2$ we obtain,

$$\frac{S_y}{n} = \sqrt{\sigma_1^2 - \sigma_1\sigma_2 + \sigma_2^2}$$

$$\text{or, } \frac{300}{2} = \sqrt{(1.485\sigma_0)^2 - (1.488\sigma_0)(0.262\sigma_0) + (0.262\sigma_0)^2}$$

$$\text{or, } \sigma_0 = 109.02MPa \text{ Answer}$$

Problem P9.38:

A stress element at a critical point of a machine component is shown in Figure P9.38 Yield strength of the machine component material is $300MPa$. Using the maximum shear stress theory, determine the value of normal stress σ_y so that the yielding just occurs.

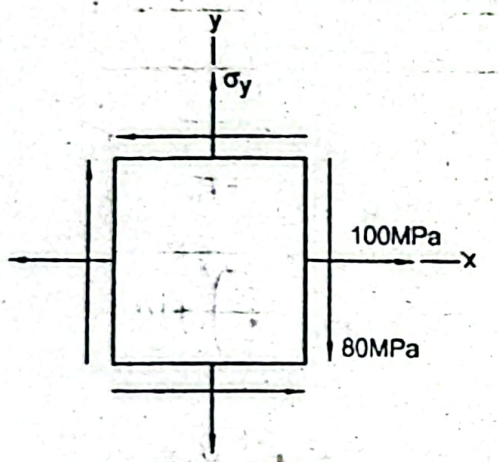

Figure P9.38

Given Data:

Normal stress, $\sigma_x = 100MPa$

Shearing stress, $\tau_{xy} = 80MPa$

Yield strength, $S_y = 300MPa$

To Find:

- Normal stress, σ_y

Solution:

Mohr's circle of the stress element is shown below.

Maximum shearing stresses are, $\tau_{max} = \frac{|\sigma_1 - \sigma_2|}{2}$

$$\tau_{max} = \frac{|\sigma_1|}{2}$$

$$\tau_{max} = \frac{|\sigma_2|}{2}$$

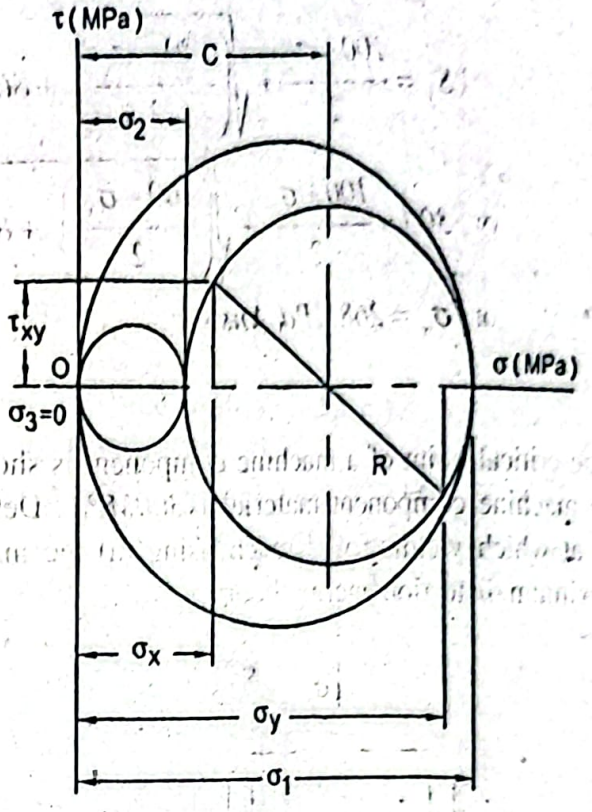

From Mohr's circle it is seen that of the three values, the maximum shearing stress,

$$\tau_{max} = \frac{|\sigma_1|}{2} = \frac{\sigma_1}{2} \qquad (i)$$

We have, $\sigma_1 = C + R$

Distance between τ-axis and the center of Mohr's circle,

$$C = \frac{\sigma_x + \sigma_y}{2} = \frac{100 + \sigma_y}{2}$$

Radius of Mohr's circle, $R = \sqrt{\left(\frac{\sigma_x - \sigma_y}{2}\right)^2 \times \tau_{xy}^2} = \sqrt{\left(\frac{100 - \sigma_y}{2}\right)^2 + 80^2}$

Therefore, $\sigma_1 = \frac{100 + \sigma_y}{2} + \sqrt{\left(\frac{100 - \sigma_y}{2}\right)^2 + 80^2} \qquad (ii)$

According to the maximum shear stress theory,

$$\tau_{max} = \frac{S_y}{2n}$$

When yielding will occur, $n = 1$

Therefore, $\tau_{max} = \frac{S_y}{n}$

Now substituting the value of τ_{max} from Equation(i),

$$\frac{\sigma_1}{2} = \frac{S_y}{2}$$

or, $\sigma_1 = S_y$

Again substituting the value of σ_1 in Equation(ii),

$$S_y = \frac{100+\sigma_y}{2} + \sqrt{\left(\frac{100-\sigma_y}{2}\right)^2 + 80^2}$$

$$\text{or, } 300 = \frac{100+\sigma_y}{2} + \sqrt{\left(\frac{100-\sigma_y}{2}\right)^2 + 80^2}$$

$$\text{or, } \sigma_y = 268MPa \text{ Answer}$$

Problem P9.39:

A stress element at the critical point of a machine component is shown in Figure P9.3(Yield strength of the machine component material is $300MPa$. Determine the value (the normal stress σ at which yielding will reach using (a) the maximum shear stre theory and (b) the maximum distortion energy theory.

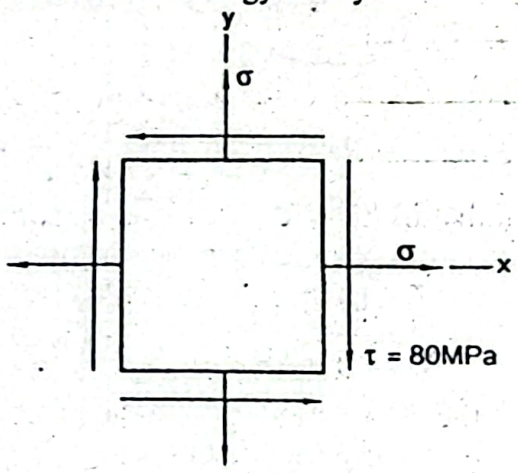

Figure P9.39

Given Data:

Normal stress, $\sigma_x = \sigma$

Normal stress, $\sigma_y = \sigma$

Shearing stress, $\tau_{xy} = \tau = 80MPa$

Yield strength, $S_y = 300MPa$

To Find:

- Value of σ at which yielding will reach using maximum shear stress theory
- Value of σ at which yielding will reach using maximum distortion energy theory

Solution:

Mohr's circle of the stress element is given below.

Principal stresses, $\sigma_1 = \sigma + \tau$

and, $\sigma_2 = \sigma - \tau$

Maximum shearing stresses are obtained from,

$$\tau_{max} = \frac{|\sigma_1 - \sigma_2|}{2} = \tau$$

$$\tau_{max} = \frac{|\sigma_1|}{2} = \frac{\sigma + \tau}{2}$$

$$\tau_{max} = \frac{|\sigma_2|}{2} = \frac{\sigma - \tau}{2}$$

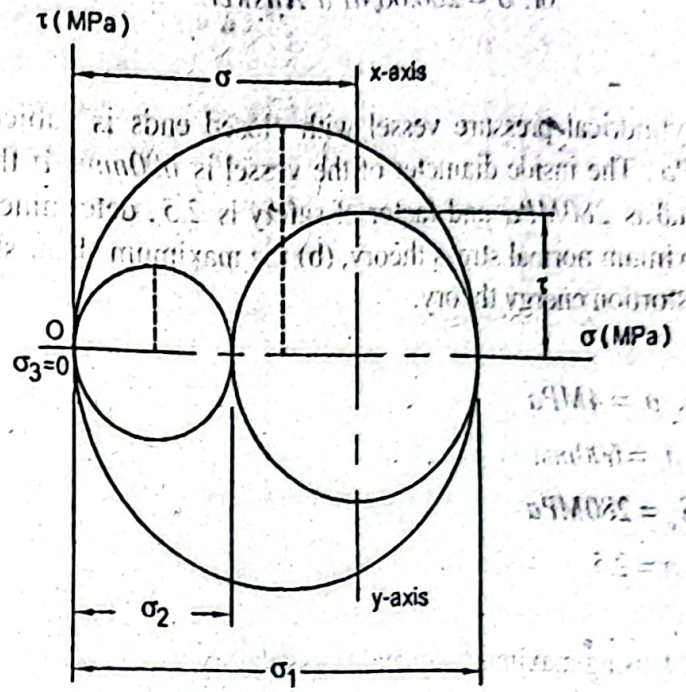

Here the maximum shearing stress is not the in-plane shearing stress.

Maximum shearing stress, $\tau_{max} = \frac{\sigma + \tau}{2}$

(a) According to the maximum shear stress theory,

$$\tau_{max} = \frac{S_y}{2n}$$

To reach yielding, $n = 1$

Therefore,

$$\frac{\sigma + \tau}{2} = \frac{S_y}{2}$$

or, $\sigma + \tau = S_y$

or, $\sigma + 80 = 300$

or, $\sigma = 220MPa$ *Answer*

(b) According to the maximum distortion energy theory,

$$\sigma' = \sqrt{\sigma_A^2 - \sigma_A\sigma_B + \sigma_B^2}$$

Now writing $\sigma' = \frac{S_y}{n}$, $\sigma_A = \sigma_1$ and $\sigma_B = \sigma_2$ we find,

$$\frac{S_y}{n} = \sqrt{\sigma_1^2 - \sigma_1\sigma_2 + \sigma_2^2}$$

To reach yielding, $n = 1$

Therefore,

$$S_y = \sqrt{(\sigma + \tau)^2 - (\sigma + \tau)(\sigma - \tau) + (\sigma - \tau)^2}$$

$$\text{or, } S_y^2 = \sigma^2 + 3\tau^2$$

$$\text{or, } 300^2 = \sigma^2 + 2\times 80^2$$

$$\text{or, } \sigma = 266.08MPa \quad \textit{Answer}$$

Problem P9.40:

A thin-walled cylindrical pressure vessel with closed ends is subjected to an interna pressure of $4MPa$. The inside diameter of the vessel is $600mm$. If the yield strength o the vessel material is $280MPa$ and factor of safety is 2.5, determine the wall thickne using (a) the maximum normal stress theory, (b) the maximum shear stress theory and (c the maximum distortion energy theory.

Given Data:

Internal pressure, $p_i = 4MPa$

Inside diameter, $d_i = 600mm$

Yield strength, $S_y = 280MPa$

Factor of safety, $n = 2.5$

To Find:

- Wall thickness, t using maximum normal stress theory
- Wall thickness, t using maximum shear stress theory
- Wall thickness, t using maximum distortion energy theory

Solution:

Tangential stress,
$$\sigma_1 = \sigma_t = \frac{p_i d_i}{2t}$$
$$= \frac{4\times 600}{2t} = \frac{1200}{t} MPa$$

Longitudinal stress,
$$\sigma_2 = \sigma_l = \frac{p_i d_i}{4t}$$
$$= \frac{4\times 600}{4t} = \frac{600}{t} MPa.$$

For a thin-walled cylindrical pressure vessel, the radial stress σ_r is neglected.

(a) According to the maximum normal stress theory,

$$\frac{S_y}{n} = \sigma_1$$

$$\text{or, } \frac{280}{2.5} = \frac{1200}{t}$$

$$\text{or, } t = 10.71mm \quad \textit{Answer}$$

(b) Now to find t using the maximum shear stress theory,

Maximum shear stresses are given by,

$$\tau_{max} = \frac{|\sigma_1 - \sigma_2|}{2}$$

$$\tau_{max} = \frac{|\sigma_1|}{2}$$

$$\tau_{max} = \frac{|\sigma_2|}{2}$$

Here in-plane shearing stress is not the maximum. Of the three stresses, the maximum shear stress,

$$\tau_{max} = \frac{|\sigma_1|}{2} = \frac{1200}{2t} MPa$$

According to the maximum shear stress theory,

$$\tau_{max} = \frac{S_y}{2n}$$

$$\text{or, } \frac{1200}{2t} = \frac{280}{2 \times 2.5}$$

$$\text{or, } t = 10.71mm \text{ Answer}$$

(c) According to the maximum distortion energy theory,

$$\sigma' = \sqrt{\sigma_A^2 - \sigma_A \sigma_B + \sigma_B^2}$$

Now writing $\sigma' = \frac{S_y}{n}$, $\sigma_1 = \sigma_A$ and $\sigma_2 = \sigma_B$ we find,

$$\frac{S_y}{n} = \sqrt{\sigma_1^2 - \sigma_1 \sigma_2 + \sigma_2^2}$$

$$\text{or, } \frac{280}{2.5} = \sqrt{\left(\frac{1200}{t}\right)^2 - \left(\frac{1200}{t}\right)\left(\frac{600}{t}\right) + \left(\frac{600}{t}\right)^2}$$

$$\text{or, } t = 9.28mm \text{ Answer}$$

Problem P9.41:

A closed ends thin-walled cylindrical pressure vessel of internal diameter $300mm$ and wall thickness $3mm$ is subjected to an internal pressure of $2MPa$. Find an additional axial tensile load that can be applied such that the maximum distortion energy theory is satisfied. Yield strength of the vessel material is $320MPa$ and safety factor is 2.5.

Given Data:

Internal diameter, $d_i = 300mm$

Wall thickness, $t = 3.0mm$

Internal pressure, $p_i = 2MPa$

Yield strength, $S_y = 320MPa$

Safety factor, $n = 2.5$

To Find:

- Additional axial tensile load, P

Solution:

Tangential stress, $\sigma_t = \frac{p_i d_i}{2t}$

$$= \frac{2\times 300}{2\times 3} MPa = 100MPa$$

Longitudinal stress, $\sigma_l = \frac{p_i d_i}{4t}$

$$= \frac{2\times 300}{4\times 3} MPa = 50MPa$$

The stress element is shown as follows.

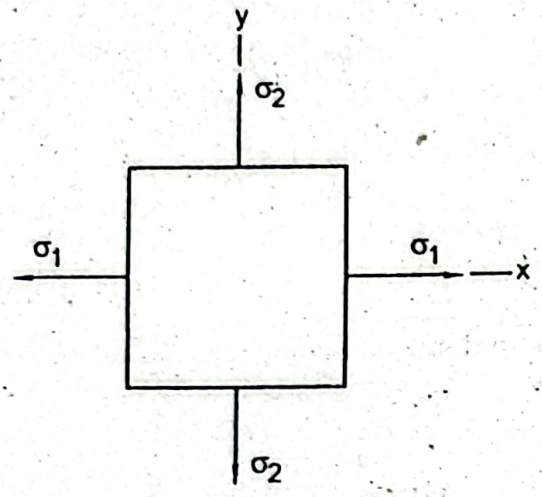

Here the maximum principal stress,

$$\sigma_1 = \sigma_l + \sigma_{1P} = 50 + \sigma_{1P} \quad (i)$$

where, σ_{1P} is the axial tensile stress due to the load P

Minimum principal stress,

$$\sigma_2 = \sigma_{1P} = 100MPa$$

According to the maximum distortion energy theory,

$$\sigma' = \sqrt{\sigma_A^2 - \sigma_A\sigma_B + \sigma_B^2}$$

Now writing $\sigma' = \frac{S_y}{n}$, $\sigma_1 = \sigma_A$ and $\sigma_2 = \sigma_B$ we find,

$$\frac{S_y}{n} = \sqrt{\sigma_1^2 - \sigma_1\sigma_2 + \sigma_2^2}$$

or, $\frac{320}{2.5} = \sqrt{\sigma_1^2 - \sigma_1 \times 100 + 100^2}$

or, $\sigma_1^2 - 100\sigma_1 - 6384 = 0$

or, $\sigma_1 = 144.25MPa$ (Considering positive value only)

Substituting in Equation (i),

$$144.25 = 50 + \sigma_{1P}$$

or, $\sigma_{1P} = 94.25MPa$

or, $\frac{P}{\pi dt} = 94.25$

or, $P = 94.25\times\pi\times 300\times 3$

or, $P = 266.49kN$ **Answer**

Problem P9.42:

A thin-walled cylindrical pressure vessel with closed ends is subjected to an internal pressure of $2.5MPa$ and a twisting moment of $2kNm$. If the internal diameter of the pressure vessel is $200mm$, the yield strength of the pressure vessel material is $300MPa$ and the safety factor is 2.5, determine the wall-thickness using (a) the maximum normal stress theory, (b) the maximum shear stress theory and (c) the maximum distortion energy theory.

Given Data:

Internal pressure, $p_i = 2.5MPa$

Twisting moment, $T = 2kNm$

Internal diameter, $d_i = 200mm$

Yield strength, $S_y = 300MPa$

Safety factor, $n = 2.5$

To Find:

- Wall thickness, t using maximum normal stress theory
- Wall thickness, t using maximum shear stress theory
- Wall thickness, t using maximum distortion energy theory

Solution:

Tangential stress, $\sigma_t = \dfrac{p_i d_i}{2t}$

$$= \frac{2.5 \times 200}{2d} = \frac{250}{t} MPa$$

Longitudinal stress, $\sigma_l = \dfrac{p_i d_i}{4t}$

$$= \frac{2.5 \times 200}{4t} = \frac{125}{t} MPa$$

Shearing stress, $\tau = \dfrac{Tc}{J} = \dfrac{T \times d_o / 2}{2\pi R^3 t}$

$$= \frac{2 \times 10^3 \times 200/2}{2\pi 100^3 t}$$ (Considering $d_o \approx d_i$ for a thin walled cylinder)

$$= \frac{31.83}{t} MPa$$

Stress element with these stresses is shown below.

Principal stresses, $\sigma_1, \sigma_2 = \dfrac{\sigma_x + \sigma_y}{2} \pm \sqrt{\left(\dfrac{\sigma_x - \sigma_y}{2}\right)^2 + \tau_{xy}^2}$

$$= \frac{125 + 250}{2t} \pm \sqrt{\left(\frac{125 - 250}{2t}\right)^2 + \left(\frac{31.83}{t}\right)^2}$$

$$= \frac{187.75}{t} \pm \frac{70.14}{t}$$

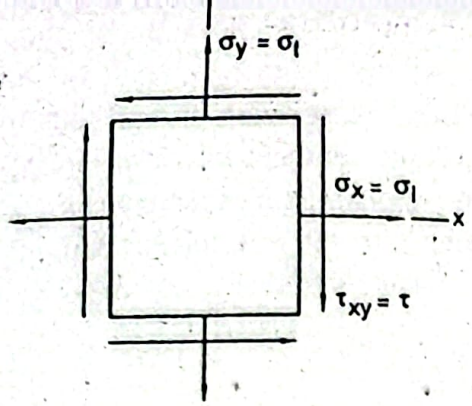

Therefore, $\sigma_1 = \frac{257.89}{t} MPa$

and, $\sigma_2 = \frac{117.61}{t} MPa$

(a) According to the maximum normal stress theory,

$$\frac{S_y}{n} = \sigma_1$$

or, $\frac{257.89}{t} = \frac{300}{2.5}$

or, $t = 2.15mm$ ***Answer***

(b) According to the maximum shear stress theory,

$$\tau_{max} = \frac{|\sigma_1 - \sigma_2|}{2} = R$$

$$\tau_{max} = \frac{|\sigma_1|}{2} = R$$

and $\tau_{max} = \frac{|\sigma_2|}{2} = R$

Mohr's circle with the principal stresses is shown below.

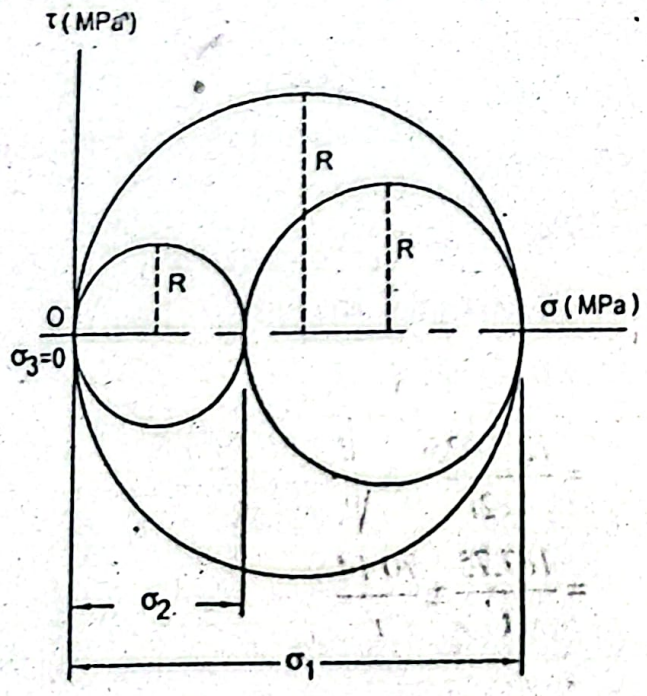

e the in-plane maximum shear stress is not maximum.
ximum shearing stress,

$$\tau_{max} = \frac{|\sigma_1|}{2}$$

Then, $\tau_{max} = \frac{S_y}{2 \times n}$

or, $\frac{\sigma_1}{2} = \frac{300}{2 \times 2.5}$

or, $\frac{257.89}{2t} = \frac{300}{2 \times 2.5}$

or, $t = 2.15mm$ *Answer*

According to the maximum distortion energy theory,

$$\sigma' = \sqrt{\sigma_A^2 - \sigma_A \sigma_B + \sigma_B^2}$$

w writing $\sigma' = \frac{S_y}{n}$, $\sigma_1 = \sigma_A$ and $\sigma_2 = \sigma_B$ we find,

$$\frac{S_y}{n} = \sqrt{\sigma_1^2 - \sigma_1 \sigma_2 + \sigma_2^2}$$

or, $\frac{300}{2.5} = \sqrt{\left(\frac{257.89}{t}\right)^2 - \left(\frac{257.89}{t}\right)\left(\frac{117.61}{t}\right) + \left(\frac{117.6}{t}\right)^2}$

or, $t = 1.86mm$ *Answer*

oblem P9.43:

closed ends thin-walled cylindrical pressure vessel is subjected to an internal fluid essure p_i, a twisting moment T and an axial tensile load P simultaneously. A stress ement on this pressure vessel is shown in Figure P9.43, where x-axis acts along the ngitudinal axis of the pressure vessel. The internal diameter and the wall thickness of e pressure vessel are respectively $300mm$ and $3mm$. Determine p_i, T and P using the aximum shear stress theory. Yield strength of the pressure vessel material is $300MPa$ d the factor of safety based on yield strength is 2.0.

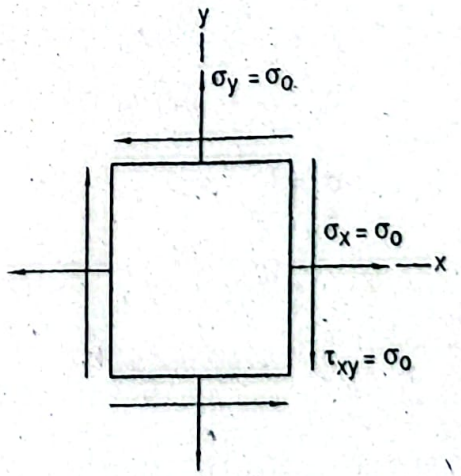

Figure P9.43

Internal diameter of pressure vessel, d_i

Wall thickness of pressure vessel, $t = 3mm$

Yield strength, $S_y = 300MPa$

Normal stress, $\sigma_x = \sigma_0$

Normal stress, $\sigma_y = \sigma_0$

Shearing stress, $\tau_{xy} = \sigma_0$

Factor of safety, $n = 2.0$

To Find:

- Internal pressure, p_i
- Twisting moment, T
- Axial tensile force, P

Solution:

Mohr's circle for the given stress element is as follows.

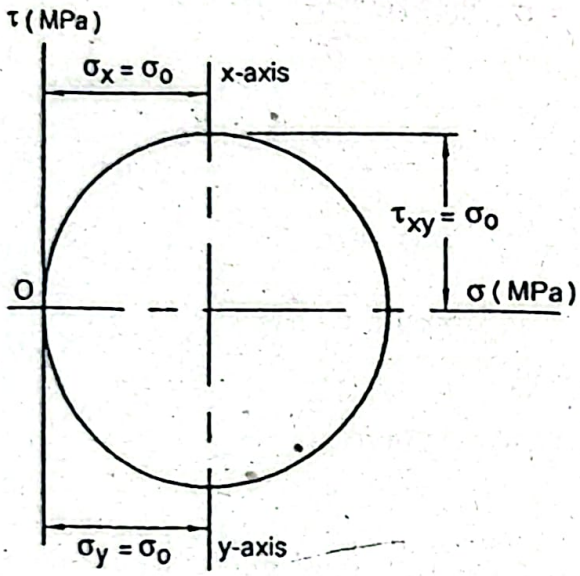

According to the maximum shear stress theory,

$$\tau_{max} = \frac{S_y}{2n}$$

$$\text{or, } \tau_{max} = \frac{300}{2\times 2} MPa = 75MPa$$

That is, $\sigma_0 = \tau_{xy} = \tau_{max} = 75MPa$

Normal stress, $\sigma_x = \sigma_0 = 75MPa$

Normal stress, $\sigma_y = \sigma_0 = 75MPa$

Tangential stress, $\sigma_t = \frac{p_i d_i}{2t} = \sigma_y$

$$\text{or, } 75 = \frac{p_i \times 300}{2\times 3}$$

$$\text{or, } p_i = 1.5MPa$$ ***Answer***

ongitudinal stress,

$$\sigma_l = \frac{p_i d_i}{4t}$$
$$= \frac{1.5\times300}{4\times3} MPa$$
$$= 37.5MPa$$

Normal stress,

$$\sigma_x = \sigma_l + \frac{P}{A}$$
$$\text{or, } 75 = 37.5 + \frac{P}{A}$$
$$\text{or, } \frac{P}{A} = 37.5$$
$$\text{or, } P = 37.5\times\pi dt$$
$$= 37.5\times\pi\times300\times3kN$$
$$= 106.03kN \text{ Answer}$$

hearing stress,

$$\tau_{xy} = \frac{Tc}{J}$$
$$\text{or, } 75 = \frac{T\times300/2}{2\pi R^3 t}$$
$$\text{or, } T = \frac{75\times2\times\pi\times150^3\times3}{150}$$
$$= 31.81kNm \text{ Answer}$$

oblem P9.44:

thin walled steel cylinder of outer diameter $300mm$ is subjected to an axial tensile load $= 225kN$ together with a torque $T = 30kNm$. If the yield strength of the cylinder terial is $240MPa$, determine the thickness of the cylinder based on the maximum ear stress theory considering safety factor of 2.0.

ven Data:

ter diameter of cylinder, $d_o = 300mm$

ial tensile load, $P = 225kN$

rque, $T = 30kNm$

eld strength, $S_y = 240MPa$

tor of safety, $n = 2.0$

Find:

hickness of cylinder, t

lution:

ial tensile stress,

$$\sigma_x = \frac{P}{A} = \frac{P}{\pi dt} = \frac{225\times10^3}{\pi\times300\times t}$$
$$= \frac{238.73}{t} MPa$$

have the moment of inertia for a thin walled cylinder,

$$I = \pi R^3 t$$

Therefore, the polar moment of inertia for a thin walled cylinder,

$$J = 2I = 2\pi R^3 t$$
$$= 2\pi(150)^3 t$$
$$= 21205750.41t\ mm^3$$

Torsional stress, $$\tau_{xy} = \frac{Tc}{J} = \frac{30\times10^6\times150}{21205750.41\times t}$$
$$= \frac{212.21}{t} MPa$$

The stress element is shown below.

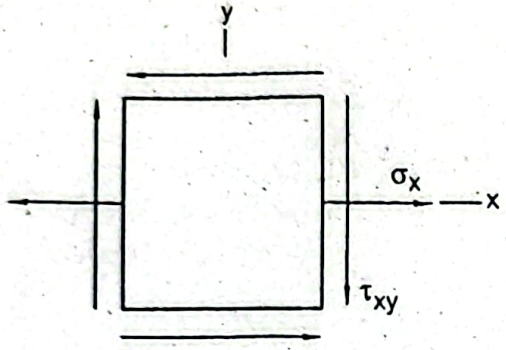

Maximum shearing stress,

$$\tau_{max} = \sqrt{\left(\frac{\sigma_x}{2}\right)^2 + \tau_{xy}^2}$$

$$\text{or, } \tau_{max} = \sqrt{\left(\frac{238.73}{2t}\right)^2 + \left(\frac{212.21}{t}\right)^2}$$

$$\text{or, } \tau_{max} = \frac{243.48}{t} MPa$$

According to the maximum shear stress theory,

$$\tau_{max} = \frac{S_y}{2n}$$

$$\text{or, } \frac{243.48}{t} = \frac{240}{2\times2}$$

$$\text{or, } t = 4.06mm \text{ Answer}$$

Problem P9.45:

A solid steel shaft of diameter *40mm* is subjected to an axial tensile load $P = 12$ together with a torque T. If the yield strength of the shaft material is *280MPa* and factor of safety is *2.0* based on yield strength, determine the applied torque maximum shear stress criterion.

Given Data:

Diameter of shaft, $d = 40mm$

Axial load, $P = 125kN$

Yield strength, $S_y = 280MPa$

Factor of safety, $n = 2.0$

To Find:

Applied torque, T

Solution:

The stress element for this loading is shown below.

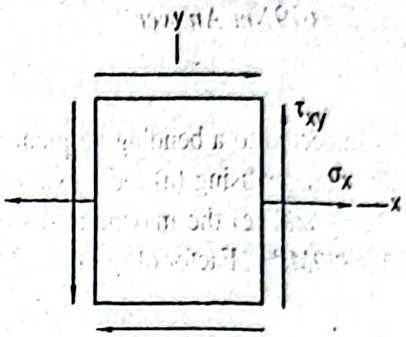

Mohr's circle for this stress element is given below.

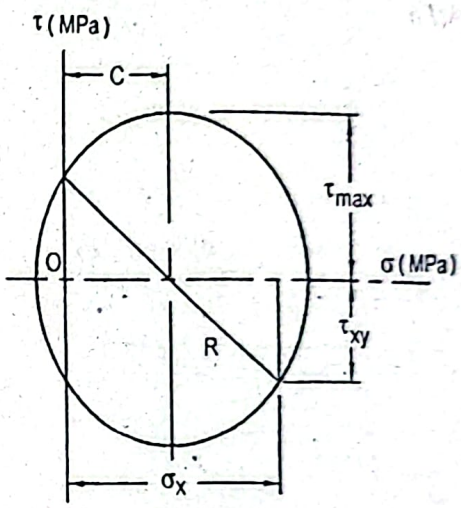

Axial stress, $$\sigma_x = \frac{P}{A} = \frac{4P}{\pi d^2}$$

or, $$\sigma_x = \frac{4 \times 125 \times 10^3}{\pi \times 40^2} MPa = 99.47 MPa$$

According to the maximum shear stress theory,

$$\tau_{max} = \frac{S_y}{2n}$$

or, $$\tau_{max} = \frac{280}{2 \times 2} MPa = 70 MPa$$

Radius of Mohr's circle, $R = \tau_{max} = 70 MPa$

We have, $$R^2 = \left(\frac{\sigma_x}{2}\right)^2 + \tau_{xy}^2$$

or, $$70^2 = \left(\frac{99.47}{2}\right)^2 + \tau_{xy}^2$$

or, $\tau_{xy} = 49.26MPa$

But also we have, $\tau_{xy} = \frac{Tc}{J} = \frac{16T}{\pi d^3}$

or, $49.26 = \frac{16T}{\pi \times 40^3}$

or, $T = 619Nm$ *Answer*

Problem P9.46:

A solid circular steel shaft is subjected to a bending moment of $450Nm$ and a torque of $250Nm$. Determine the shaft diameter using (a) the maximum normal stress theory, (b) the maximum shear stress theory and (c) the maximum distortion energy theory. Yield strength of the shaft material is $300MPa$. Factor of safety is 2.0 based on yield strength.

Given Data:

Bending moment, $M = 450Nm$

Torque, $T = 250Nm$

Yield strength, $S_y = 300MPa$

Factor of safety, $n = 2.0$

To Find:

- Shaft diameter, d

Solution:

Normal stress, $\sigma_x = \frac{Mc}{I} = \frac{450 \times 10^3 \times d/2}{\pi d^4/64} = \frac{4583662.36}{d^3}$

Torsional stress, $\tau_{xy} = \frac{Tc}{J} = \frac{250 \times 10^3 \times d/2}{\pi d^4/32} = \frac{1273239.55}{d^3}$

Principal stresses, $\sigma_1, \sigma_2 = \frac{\sigma_x}{2} \pm \sqrt{\left(\frac{\sigma_x}{2}\right)^2 + \tau_{xy}^2}$

$$= \frac{4583662.36}{2 \times d^3} \pm \sqrt{\left(\frac{4583662.36}{2 \times d^3}\right)^2 + \left(\frac{1273239.55}{d^3}\right)^2}$$

$$\sigma_1 = \frac{4913591.87}{d^3} MPa$$

and, $\sigma_2 = -\frac{329929.51}{d^3} MPa$

Maximum shearing stress,

$$\tau_{max} = \sqrt{\left(\frac{\sigma_x}{2}\right)^2 + \tau_{xy}^2}$$

$$= \sqrt{\left(\frac{4583662.36}{2d^3}\right)^2 + \left(\frac{1273239.55}{d^3}\right)^2}$$

$$= \frac{2621760.69}{d^3} MPa$$

(a) According to the maximum normal stress theory,

$$\sigma_1 = \frac{S_y}{n} = \frac{300}{2} = 150$$

or, $\frac{4913592.87}{d^3} = 150$

or, $d = 31.89mm$ *Answer*

(b) According to the maximum shear stress theory,

$$\tau_{max} = \frac{S_y}{2n} = \frac{300}{2\times 2} MPa = 75MPa$$

or, $\frac{2621760.69}{d^3} = 75$

or, $d = 32.58mm$ *Answer*

(c) According to the maximum distortion energy theory for bi-axial stress,

$$\sigma' = \frac{S_y}{n} = \sqrt{\sigma_A^2 - \sigma_A\sigma_B + \sigma_B^2}$$

Now writing $\sigma_A = \sigma_1$ and $\sigma_B = \sigma_2$ we find,

$$\frac{S_y}{n} = \frac{300}{2} = \sqrt{\sigma_1^2 - \sigma_1\sigma_2 + \sigma_2^2}$$

or,

$$150 = \sqrt{\left(\frac{4913591.87}{d^3}\right)^2 - \left(\frac{4913591.87}{d^3}\right)\left(-\frac{329929.51}{d^3}\right) + \left(\frac{329929.51}{d^3}\right)^2}$$

or, $d = 31.54mm$ *Answer*

roblem P9.47:

solid circular steel rod of diameter $50mm$ is subjected to an axial tensile load $= 150kN$ and a torque $T = 2.0kNm$. If the yield strength of steel is $280MPa$, etermine the factor of safety using the maximum distortion energy theory.

iven Data:

xial load, $P = 150kN$

orque, $T = 2.0kNm$

iameter of rod, $d = 50mm$

ield strength, $S_y = 280MPa$

o Find:

Factor of safety, n

olution:

xial tensile stress, $\sigma_x = \frac{P}{A} = \frac{4P}{\pi d^2}$

$$= \frac{4\times 150\times 10^3}{\pi\times 50^2} MPa = 76.39MPa$$

Shearing stress, $\tau_{xy} = \frac{Tc}{J} = \frac{16T}{\pi d^3}$

$$= \frac{16 \times 2 \times 10^6}{\pi \times 50^3} = 81.49MPa$$

Principal stresses, $\sigma_1, \sigma_2 = \frac{\sigma_x}{2} \pm \sqrt{\left(\frac{\sigma_x}{2}\right)^2 + \tau_{xy}^2}$

$$= \frac{76.39}{2} \pm \sqrt{\left(\frac{76.39}{2}\right)^2 + (81.49)^2}$$

$$= 38.20 \pm 90$$

Therefore, $\sigma_1 = 128.20MPa$

$\sigma_2 = -51.80MPa$

According to the maximum distortion energy theory for bi-axial stress,

$$\sigma' = \sqrt{\sigma_A^2 - \sigma_A \sigma_B + \sigma_B^2}$$

Now writing $\sigma_A = \sigma_1$, $\sigma_B = \sigma_2$ and $\sigma' = \frac{S_y}{n}$ we find,

$$\frac{S_y}{n} = \sqrt{\sigma_1^2 - \sigma_1 \sigma_2 + \sigma_2^2}$$

or, $\frac{280}{n} = \sqrt{(128.20)^2 - (128.20)(-51.80) + (51.80)^2}$

or, $n = 1.75$ *Answer*

Problem P9.48:

A solid circular steel shaft is subjected to a bending moment of $4.0kNm$ and a torque of $2.5kNm$ simultaneously. Determine the diameter of the shaft based on the maximum distortion energy theory and the maximum shear stress theory. Yield strength of the shaft material is $300MPa$ and the factor of safety is 2.5.

Given Data:

Bending moment, $M = 4.0kNm$

Torque, $T = 2.5kNm$

Yield strength, $S_y = 300MPa$

Safety factor, $n = 2.5$

To Find:

- Diameter of shaft, d based on maximum distortion energy theory
- Diameter of shaft, d based on maximum shear stress theory

Solution:

Bending stress, $\sigma_b = \sigma_x = \frac{Mc}{I} = \frac{32M}{\pi d^3}$

$$= \frac{32 \times 4 \times 10^6}{\pi d^3}$$

$$= \frac{40,743,665.43}{d^3} MPa$$

sional stress, $\tau = \tau_{xy} = \frac{Tc}{J} = \frac{16T}{\pi d^3}$

$$= \frac{16 \times 2.5 \times 10^6}{\pi d^3}$$

$$= \frac{12732395.45}{d^3} MPa$$

ncipal stresses, $\sigma_1, \sigma_2 = \frac{\sigma_x}{2} \pm \sqrt{\left(\frac{\sigma_x}{2}\right)^2 + \tau_{xy}^2}$

$$= \frac{40743665.43}{2d^3} \pm \sqrt{\left(\frac{40743665.43}{2d^3}\right)^2 + \left(\frac{12732395.45}{d^3}\right)^2}$$

$$= \frac{20371832.72}{d^3} \pm \frac{24023435.68}{d^3}$$

refore, $\sigma_1 = \frac{44395268.4}{d^3} MPa$

and, $\sigma_2 = -\frac{3651602.95}{d^3} MPa$

ximum shearing stress,

$$\tau_{max} = \pm \sqrt{\left(\frac{\sigma_x}{2}\right)^2 + \tau_{xy}^2}$$

$$= \pm \sqrt{\left(\frac{40743665.43}{2d^3}\right)^2 + \left(\frac{12732395.45}{d^3}\right)^2}$$

$$= \pm \frac{24023435.68}{d^3}$$

cording to the maximum distortion energy theory for bi-axial stress,

$$\sigma' = \sqrt{\sigma_A^2 - \sigma_A \sigma_B + \sigma_B^2}$$

w writing $\sigma_A = \sigma_1$, $\sigma_B = \sigma_2$ and $\sigma' = \frac{S_y}{n}$ we find,

$$\frac{S_y}{n} = \sqrt{\sigma_1^2 - \sigma_1 \sigma_2 + \sigma_2^2}$$

or, $\frac{300}{2.5} = \sqrt{\left(\frac{44395268.4}{d^3}\right)^2 - \left(\frac{44395268.4}{d^3}\right)\left(-\frac{3651602.95}{d^3}\right) + \left(-\frac{3651602.95}{d^3}\right)^2}$

or, $d = 72.82mm$ *Answer*

cording to the maximum shear stress theory,

$$\tau_{max} = \frac{S_y}{2n}$$

$$\text{or, } \frac{24023435.68}{d^3} = \frac{300}{2\times 2.5}$$

$$\text{or, } d = 73.70mm \quad \textit{Answer}$$

Problem P9.49:

A hollow steel shaft of outside diameter $d_o = 100mm$ and inside diameter $d_i = 0.5$ subjected to an axial tensile load $P = 100kN$, a bending moment $M = 8kNm$ a torque $T = 6kNm$ simultaneously. Determine the factor of safety based on the maxi shear stress theory and the maximum distortion energy theory. Yield strength of the material is $300MPa$.

Given Data:

Outside diameter, $d_o = 100mm$

Inside diameter, $d_i = 0.5d_o$

Axial tensile load, $P = 100kN$

Bending moment, $M = 8kNm$

Torque, $T = 6kNm$

Yield strength, $S_y = 300MPa$

To Find:

- Factor of safety, n based on maximum shear stress theory
- Factor of safety, n based on maximum distortion energy theory

Solution:

Tensile stress due to the axial tensile load,

$$\sigma_t = \frac{P}{A} = \frac{P}{\frac{\pi}{4}\left(d_o^2 - d_i^2\right)}$$

$$= \frac{100\times 10^3 \times 4}{\pi\left(100^2 - 50^2\right)} \quad (\text{Since } d_i = 0.5d_o = 0.5\times 100mm = 50m$$

$$= 16.98MPa$$

Bending stress, $$\sigma_b = \frac{Mc}{I} = \frac{M\times d_o/2}{\frac{\pi}{64}\left(d_o^4 - d_i^4\right)}$$

$$= \frac{8\times 10^6 \times 100/2\times 64}{\pi\left(100^4 - 50^4\right)}$$

$$= 86.92MPa$$

Total normal stress, $$\sigma_x = \left(\sigma_t + \sigma_b\right)$$

$$= (16.98 + 86.92)MPa$$

$$= 103.90MPa$$

Torsional stress, $$\tau = \tau_{xy} = \frac{Tc}{J} = \frac{T\times d_o/2}{\frac{\pi}{32}\left(d_o^4 - d_i^4\right)}$$

$$= \frac{6\times10^3\times100/2\times32}{\pi\left(100^4-50^4\right)}$$

$$= 32.60MPa$$

ncipal stresses, $\sigma_1, \sigma_2 = \frac{\sigma_x}{2} \pm \sqrt{\left(\frac{\sigma_x}{2}\right)^2 + \tau_{xy}^2}$

$$= \frac{103.90}{2} \pm \sqrt{\left(\frac{103.90}{2}\right)^2 + (32.60)^2}$$

$$= 51.95 \pm 61.33$$

refore, $\sigma_1 = 113.28MPa$

and, $\sigma_2 = -9.38MPa$

imum shearing stress,

$$\tau_{max} = \pm\sqrt{\left(\frac{\sigma_x}{2}\right)^2 + \tau_{xy}^2}$$

$$= \pm\sqrt{\left(\frac{103.90}{2}\right)^2 + (32.60)^2}$$

$$= \pm 61.33MPa$$

rding to the maximum shear stress theory,

$$\tau_{max} = \frac{S_y}{2n}$$

or, $61.33 = \frac{300}{2n}$

or, $n = 2.45$ *Answer*

rding to the maximum distortion energy theory,

$$\sigma' = \sqrt{\sigma_A^2 - \sigma_A\sigma_B + \sigma_B^2}$$

writing $\sigma_A = \sigma_1$, $\sigma_B = \sigma_2$ and $\sigma' = \frac{S_y}{n}$ we find,

$$\frac{S_y}{n} = \sqrt{\sigma_1^2 - \sigma_1\sigma_2 + \sigma_2^2}$$

or, $\frac{300}{n} = \sqrt{(113.28)^2 - (113.28)(-9.38) + (-9.38)^2}$

or, $n = 2.54$ *Answer*

em P9.50:

low circular cylinder of $100mm$ outside diameter and $50mm$ inside diameter is ted to an axial tensile load $P = 250kN$, a bending moment $M = 4kNm$ and a ng moment T simultaneously. Yield strength of the cylinder material is $320MPa$ e safety factor based on yield strength is 2.0. Determine the maximum twisting nt that can be applied to satisfy the maximum shear stress theory.

Given Data:

Outside diameter, $d_o = 100mm$

Inside diameter, $d_i = 50mm$

Axial tensile load, $P = 250kN$

Bending moment, $M = 4kNm$

Yield strength, $S_y = 320MPa$

Safety factor, $n = 2.0$

To Find:

- Maximum twisting moment, T

Solution:

Tensile stress due to the axial tensile load,

$$\sigma_t = \frac{P}{A} = \frac{P}{\frac{\pi}{4}\left(d_o^2 - d_i^2\right)}$$

$$= \frac{4 \times 250 \times 10^3}{\pi\left(100^2 - 50^2\right)} MPa = 42.44MPa$$

Bending stress, $$\sigma_b = \frac{Mc}{I} = \frac{4 \times 10^6 \times 100/2}{\frac{\pi}{64}\left(100^4 - 50^4\right)} MPa$$

$$= 43.46MPa$$

Total normal stress, $\sigma_x = \sigma_t + \sigma_b$

$$= \left(42.44 + 43.66\right) MPa = 85.90MPa$$

The stress element is shown below.

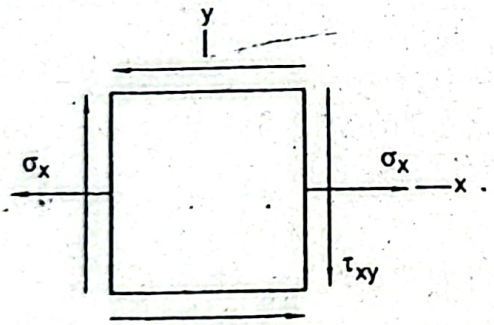

Mohr's circle for this stress element is given below.

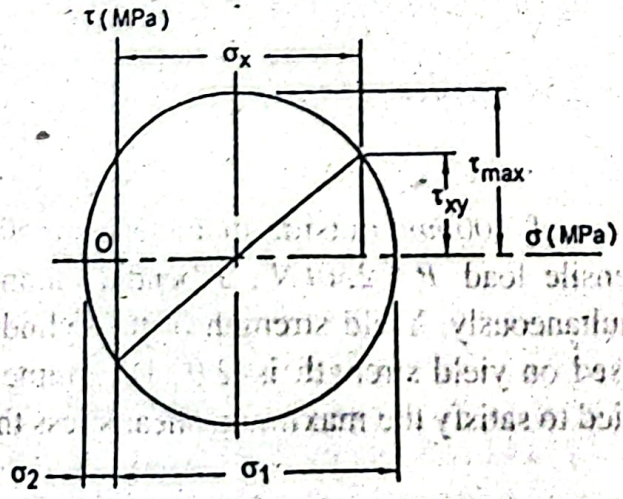

According to the maximum shear stress theory,

$$\tau_{max} = \frac{S_y}{2n}$$

$$= \frac{320}{2\times 2} MPa = 80MPa$$

We have the maximum shearing stress from Mohr's circle,

$$\tau_{max} = \pm\sqrt{\left(\frac{\sigma_x}{2}\right)^2 + \tau_{xy}^2}$$

$$\text{or, } 80^2 = \left(\frac{85.90}{2}\right)^2 + \tau_{xy}^2$$

$$\text{or, } \tau_{xy} = 67.49MPa$$

Now we have, $\tau_{xy} = \frac{Tc}{J}$

$$\text{or, } 67.49 = \frac{T\times 100/2\times 32}{\pi\left(100^4 - 50^4\right)}$$

$$\text{or, } T = 12.42kNm \text{ Answer}$$

Problem P9.51:

A solid circular steel shaft of $40mm$ diameter is subjected to an axial tensile load $P = 250kN$ and a torque T as shown in Figure P9.51. Yield strength of the shaft material is $300MPa$. Determine the torque using the maximum shear stress theory so that the yielding just occurs. Also determine the torque using the maximum normal stress theory for the same condition.

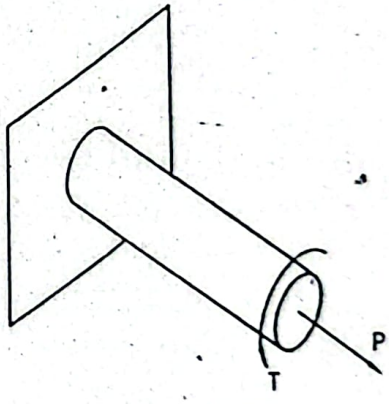

Figure P9.51

Given Data:

Axial tensile load, $P = 250kN$

Diameter of shaft, $d = 40mm$

Yield strength of steel material, $S_y = 300MPa$

To Find:

- Torque, T based on maximum shear stress theory
- Torque, T based on maximum normal stress theory

Solution:

Normal stress in the axial direction,

$$\sigma_x = \frac{P}{A} = \frac{250\times10^3\times4}{\pi\times40^2} MPa = 198.94MPa$$

Stress element on the surface of the shaft is given as follows.

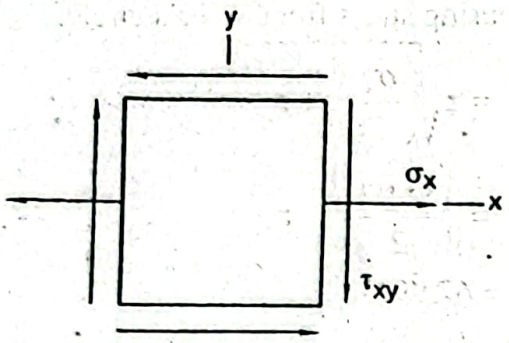

According to the maximum shear stress theory,

$$\tau_{max} = \frac{S_y}{2} = \frac{300}{2} MPa = 150MPa$$

Maximum shearing stress, $\tau_{max} = \sqrt{\left(\frac{\sigma_x}{2}\right)^2 + \tau_{xy}^2}$

$$\text{or, } 150 = \sqrt{\left(\frac{198.94}{2}\right)^2 + \tau_{xy}^2}$$

$$\text{or, } \tau_{xy} = 112.28MPa$$

But we have, $\tau_{xy} = \frac{Tc}{J} = \frac{16T}{\pi d^3}$

$$\text{or, } 112.28 = \frac{16T}{\pi\times40^3}$$

$$\text{or, } T = 1410.95Nm \text{ Answer}$$

According to the maximum normal stress theory,

$$\sigma_1 = S_y = 300MPa$$

Maximum principal stress, $\sigma_1 = \frac{\sigma_x}{2} \pm \sqrt{\left(\frac{\sigma_x}{2}\right)^2 + \tau_{xy}^2}$

$$\text{or, } 300 = \frac{198.94}{2} + \sqrt{\left(\frac{198.94}{2}\right)^2 + \left(\tau_{xy}\right)^2}$$

$$\text{or, } \tau_{max} = 174.12MPa$$

But we have, $\tau_{xy} = \frac{Tc}{J} = \frac{16T}{\pi d^3}$

$$\text{or, } 174.12 = \frac{16T}{\pi\times40^3}$$

$$\text{or, } T = 2188.06Nm \text{ Answer}$$

Problem

bent steel rod ABC ... diameter 40mm is subjected to a load $P = 4kN$ as shown in Figure P9.52. Based on the consideration of stress element at the point D at the fillet in end, determine the factor of safety using (a) the maximum shear stress theory, (b) the maximum distortion energy theory and (c) the maximum normal stress theory. Yield strength of the rod material $S_y = 250MPa$.

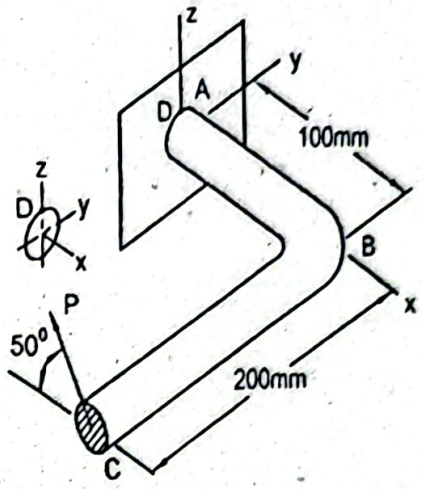

Figure P9.52

Given Data:

Load, $P = 4kN$

Diameter, $d = 40mm$

Yield strength, $S_y = 250MPa$

To Find:

- Factor of safety, n using maximum shear stress theory
- Factor of safety, n using maximum distortion energy theory
- Factor of safety, n using maximum normal stress theory

Solution:

For the applied load P in the bent rod a bending moment, torque and forces as shown in the following figure are developed.

Horizontal component of the force,

$$P_h = P\cos 50^0 = 4\times\cos 50^0 = 2.571kN$$

Vertical component of the force,

$$P_v = P\sin 50^0 = 4\times\sin 50^0 = 3.064kN$$

Torque, $T = P_v \times 200 = 3.064\times 200Nm = 612.8Nm$

Bending moment, $M_1 = P_h \times 200 = 2.571\times 200Nm = 514.2Nm$

Moment at D, $M_2 = P_v \times 100 = 3.064\times 100Nm = 306.4Nm$

Compressive stress at D,

$$\sigma_{cD} = -\frac{P_h}{A} = -\frac{4P_h}{\pi d^2} = -\frac{4\times 2.571\times 10^3}{\pi\times 40^2}MPa = -2.046MPa$$

Bending stress at D,

$$\sigma_{b_D} = -\frac{M_z c}{I} = -\frac{32M_z}{\pi d^3} = -\frac{306.4\times10^3\times32}{\pi\times40^3}MPa = -48.77MPa$$

Therefore, the total normal stress at D,

$$\sigma_D = \sigma_x = \left(\sigma_{c_D} + \sigma_{b_D}\right) = (-2.046 - 48.77)MPa = -50.81MPa$$

Torsional shearing stress at D,

$$\tau_{c_D} = \tau_{xy} = \frac{Tc}{J} = \frac{16T}{\pi d^3} = \frac{16\times612.8\times10^3}{\pi\times40^3}MPa = 48.77MPa$$

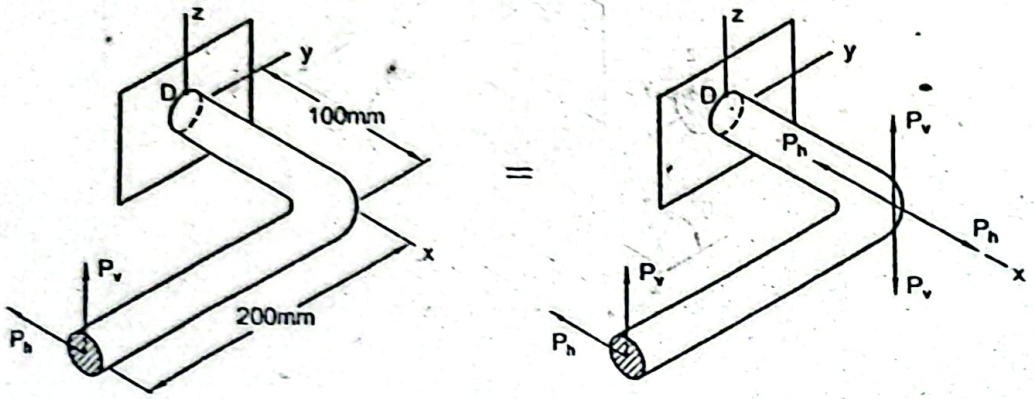

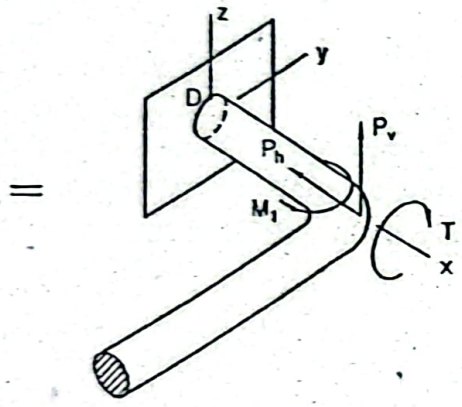

The stress element at D is shown below.

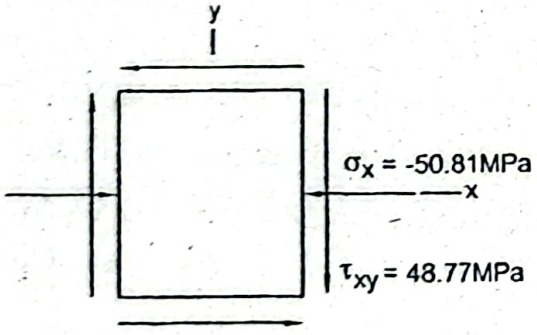

Principal stresses at D,

$$\sigma_1, \sigma_2 = \frac{\sigma_x}{2} \pm \sqrt{\left(\frac{\sigma_x}{2}\right)^2 + \tau_{xy}^2}$$

$$= \frac{-50.81}{2} \pm \sqrt{\left(\frac{-50.81}{2}\right)^2 + (48.77)^2}$$

$$= (-25.41 \pm 54.99)\,MPa$$

Therefore, $\sigma_1 = 29.58MPa$

and, $\sigma_2 = -80.40MPa$

Maximum shearing stress,

$$\tau_{max} = \pm\sqrt{\left(\frac{\sigma_A}{2}\right)^2 + \tau_{xy}^2}$$

$$= \pm\sqrt{\left(\frac{-50.81}{2}\right)^2 + (48.77)^2}$$

$$= \pm 54.99MPa$$

a) According to the maximum shear stress theory,

$$\tau_{max} = \frac{S_y}{2n}$$

$$\text{or, } n = \frac{S_y}{2 \times \tau_{max}} = \frac{250}{2 \times 54.99} = 2.27 \text{ Answer}$$

b) According to the maximum distortion energy theory,

$$\sigma' = \sqrt{\sigma_A^2 - \sigma_A\sigma_B + \sigma_B^2}$$

Now writing, $\sigma_A = \sigma_1$, $\sigma_B = \sigma_2$ and $\sigma' = \frac{S_y}{n}$ we find,

$$\frac{S_y}{n} = \sqrt{\sigma_1^2 - \sigma_1\sigma_2 + \sigma_2^2}$$

$$\text{or, } \frac{250}{n} = \sqrt{(29.58)^2 - (29.58)(-80.40) + (-80.40)^2}$$

$$\text{or, } n = 2.54 \text{ Answer}$$

(c) According to the maximum normal stress theory,

$$|\sigma_2| = \frac{S_y}{n}$$

$$\text{or, } n = \frac{S_y}{|\sigma_2|} = \frac{250}{80.40} = 3.11 \text{ Answer}$$

Problem P9.53:

A pulley of diameter $350mm$ is fastened to a solid circular steel shaft at its mid-section as shown in Figure P9.53. Contact angle of the pulley is π *rad* and the coefficient of friction is 0.30. Yield strength of the shaft material is $300MPa$ and the safety factor is 2.0. Belt tensions are T_1 and T_2. If $10kW$ of power is transmitted through a pulley and belt arrangement at $1500rpm$, determine the shaft diameter using (a) the maximum normal stress theory, (b) the maximum shear stress theory and (c) the maximum distortion energy theory.

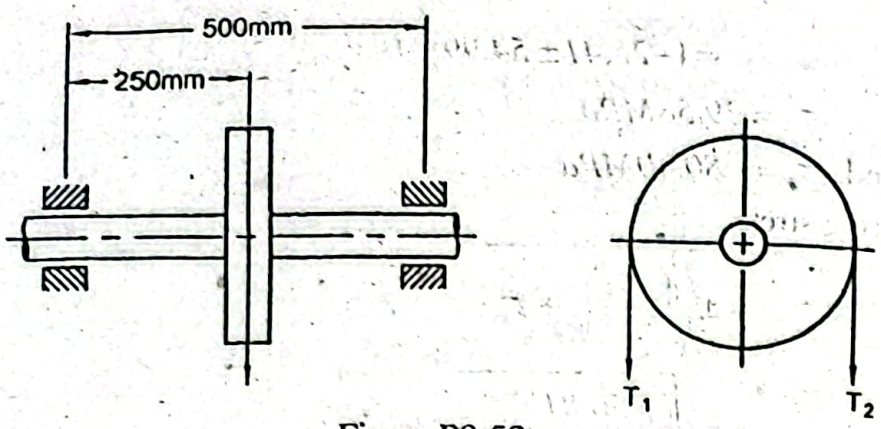

Figure P9.53

Given Data:

Pulley diameter, $d_p = 350mm$

Contact angle of pulley, $\theta = \pi\ rad$

Coefficient of friction, $\mu = 0.30$

Yield strength of shaft material, $S_y = 300MPa$

Power transmitted, $H = 10kW$

Speed of shaft, $n = 1500rpm$

To Find:

- Shaft diameter, d using maximum normal stress theory
- Shaft diameter, d using maximum shear stress theory
- Shaft diameter, d using maximum distortion energy theory

Solution:

Power, $H = T\omega$ (Here T is the torque transmitted)

$$\text{or, } 10\times10^3 = T\times\frac{2\times\pi\times1500}{60}$$

$$\text{or, } T = 63.66Nm$$

We have, $(T_1 - T_2)\times\frac{350}{2} = T$ (Here T_1 and T_2 are tensions)

$$\text{or, } (T_1 - T_2) = \frac{63.66\times10^3\times2}{350}$$

$$\text{or, } T_1 - T_2 = 363.77N \quad (i)$$

We know that, $\frac{T_1}{T_2} = e^{\mu\theta}$

$$\text{or, } \frac{T_1}{T_2} = e^{0.3\times\pi} = 2.566$$

$$\text{or, } T_1 = 2.566T_2$$

Substituting in Equation (i),

$$2.566T_2 - T_2 = 363.77$$

$$\text{or, } T_2 = 232.29N$$

erefore,

tal pull due to the belt tension,

$$P = T_1 + T_2$$

$$= (596.06 + 232.29)N = 828.35N$$

rces acting on the shaft are shown below.

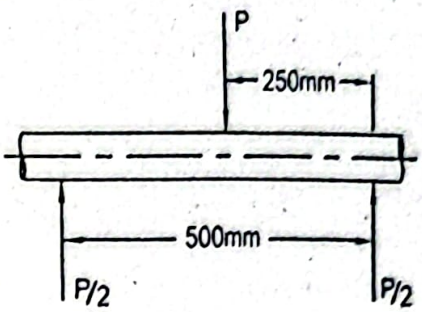

ending moment, $M = \frac{P}{2} \times 250$

$$= \frac{828.35}{2} \times 250Nmm = 103543.75Nmm$$

ending stress, $\sigma_x = \sigma_b = \frac{Mc}{I} = \frac{32 \times M}{\pi d^3} = \frac{32 \times 103543.75}{\pi d^3} = \frac{1054687.98}{d^3} MPa$

hearing stress, $\tau_{xy} = \tau = \frac{Tc}{J} = \frac{16T}{\pi d^3} = \frac{16 \times 63.66 \times 10^3}{\pi d^3} = \frac{324217.72}{d^3} MPa$

rincipal stresses, $\sigma_1, \sigma_2 = \frac{\sigma_x}{2} \pm \sqrt{\left(\frac{\sigma_x}{2}\right)^2 + \tau_{xy}^2}$

$$= \frac{1054687.98}{2d^3} \pm \sqrt{\left(\frac{1054687.98}{2d^3}\right)^2 + \left(\frac{324217.72}{d^3}\right)^2}$$

$$= \frac{527343.99}{d^3} \pm \frac{619038.62}{d^3}$$

herefore, $\sigma_1 = \frac{1146382.61}{d^3} MPa$

and, $\sigma_2 = -\frac{91694.63}{d^3} MPa$

Maximum shearing stress,

$$\tau_{max} = \pm \sqrt{\left(\frac{\sigma_x}{2}\right)^2 + \tau_{xy}^2}$$

$$= \pm \sqrt{\left(\frac{1054687.98}{2d^3}\right)^2 + \left(\frac{324217.72}{d^3}\right)^2}$$

$$= \pm \frac{619038.62}{d^3} MPa$$

(a) According to the maximum normal stress theory,

$$\sigma_1 = \frac{S_y}{n}$$

$$\text{or, } \frac{1146382.61}{d^3} = \frac{300}{2.5}$$

$$\text{or, } d = 21.21mm \text{ Answer}$$

(b) According to the maximum shear stress theory,

$$\tau_{max} = \frac{S_y}{2n}$$

$$\text{or, } \frac{619038.62}{d^3} = \frac{300}{2\times 2.5}$$

$$\text{or, } d = 21.70mm \text{ Answer}$$

(c) According to the maximum distortion energy theory,

$$\sigma' = \sqrt{\sigma_A^2 - \sigma_A\sigma_B + \sigma_B^2}$$

Now writing $\sigma_A = \sigma_1$, $\sigma_B = \sigma_2$ and $\sigma' = \frac{S_y}{n}$ we find,

$$\frac{S_y}{n} = \sqrt{\sigma_1^2 - \sigma_1\sigma_2 + \sigma_2^2}$$

$$\text{or, } \frac{300}{2.5} = \sqrt{\left(\frac{1146382.61}{d^3}\right)^2 - \left(\frac{1146382.61}{d^3}\right)\left(\frac{-91694.63}{d^3}\right) + \left(\frac{91694.63}{d^3}\right)^2}$$

$$\text{or, } d = 21.45MPa \text{ Answer}$$

Problem P9.54:

A circular road sign of $500mm$ diameter is attached to a hollow round steel post of outer diameter $75mm$ as shown in Figure P9.54. If the wind pressure is $225kg/m^2$, determine the inner diameter of the post based on the maximum shear stress theory. Yield strength of the post material is $300MPa$ and the safety factor is 2.5.

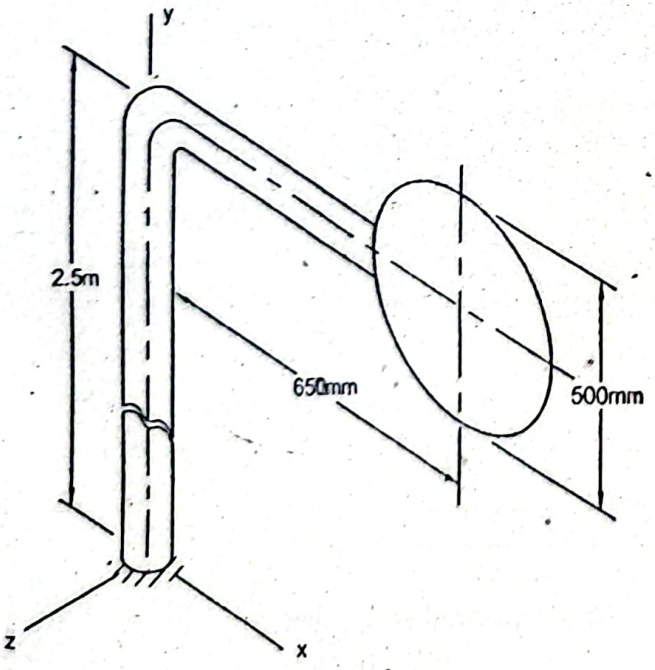

Figure P9.54

Given Data:

Diameter of road sign, $d = 500mm$

Outer diameter of post, $d_o = 75mm$

Wind pressure, $p_w = 225kg/m^2$

Yield strength, $S_y = 300MPa$

Factor of safety, $n = 2.5$

To Find:

- Inner diameter of post, d_i

Solution:

A torque and the force as shown in the figure below are developed in the post.

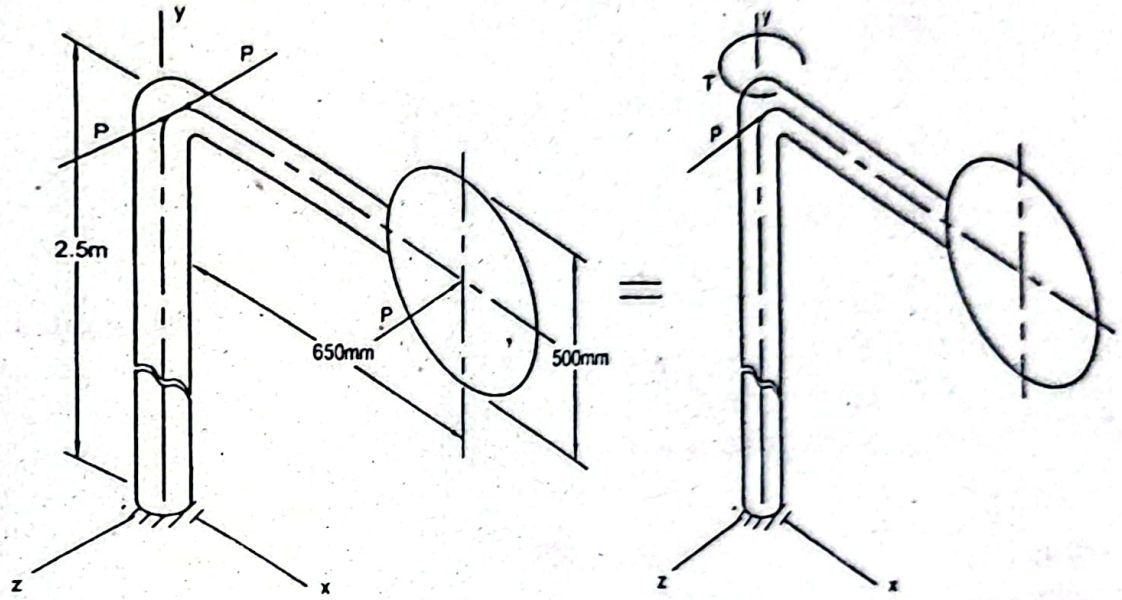

Wind load, $P = p_w A$

$$= 225 \times 9.81 \times \frac{\pi (0.5)^2}{4} N = 433.39N$$

Wind load P creates a torque,

$$T = P\left(650 + \frac{75}{2}\right)$$

$$= 433.39 \times 687.5 Nmm = 297955.63 Nmm$$

A bending moment is developed and it is maximum at the built-in end of the post.

$$M = P \times 2.5 \times 10^3$$

$$= 433.39 \times 2.5 \times 10^3 Nmm = 1083475 Nmm$$

Shearing stress, $\tau = \frac{Tc}{J}$

$$= \frac{297955.63 \times 75/2}{J}$$

$$= \frac{5586656.25}{\bar{I}} MPa$$ (Writing $J = 2\bar{I}$ for circular cross-section)

Bending stress, $\sigma = \frac{Mc}{\bar{I}}$

$$= \frac{1083475 \times 75/2}{\bar{I}} MPa$$

We have, $\tau_{max} = \frac{S_y}{2n} = \frac{300}{2 \times 2.5} MPa = 60MPa$

Again, $\tau_{max} = \sqrt{\left(\frac{\sigma}{2}\right)^2 + \tau^2}$

or, $(60)^2 = \left(\frac{\sigma}{2}\right)^2 + \tau^2$

or, $(60)^2 = \left(\frac{40630312.5}{2\bar{I}}\right)^2 + \left(\frac{5586656.25}{\bar{I}}\right)^2$

or, $\bar{I} = 351155.36mm^4$

or, $\frac{\pi}{64}\left(d_o^4 - d_i^4\right) = 351155.36$

or, $\frac{\pi}{64}\left(75^4 - d_i^4\right) = 351155.36$

or, $d_i = 70.35mm$ **Answer**

EXERCISES

Problem E9.1:

A stepped solid circular steel shaft ABC is subjected to a twisting moment $4kNm$ as shown in Figure E9.1. Determine the strain energy stored in the shaft. Consider modulus of rigidity $G_s = 80GPa$.

Ans.: $U = 27.46Nm$

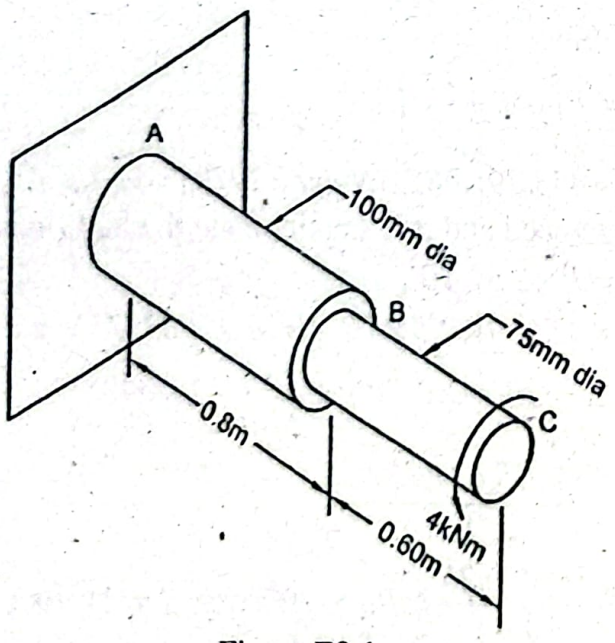

Figure E9.1

roblem E9.2:

brass shaft ABC is subjected to a twisting moment T at its free end as shown in Figure 9.2. If the maximum shearing stress developed is $60MPa$ and it is same in both the ortions AB and BC, determine the strain energy stored in the shaft. Modulus of rigidity f shaft material is $40GPa$.

Ans.: $U = 346.33Nm$

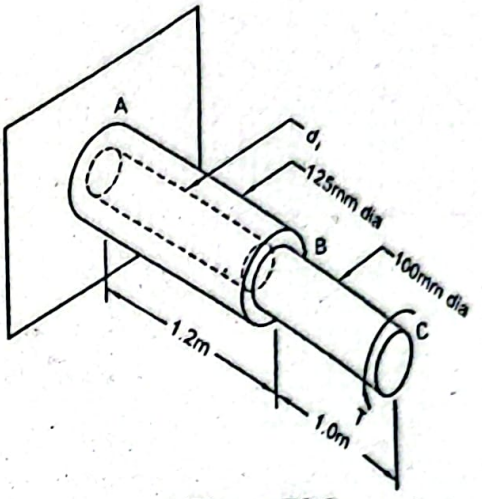

Figure E9.2

Problem E9.3:

A steel truss supports a load $150kN$ as shown in Figure E9.3. Determine the total strain energy in the truss if the yielding just reaches in both the members of the truss. Yield strength and modulus of elasticity of steel material are respectively $280MPa$ and $200GPa$.

Ans.: $U = 1697.67Nm$

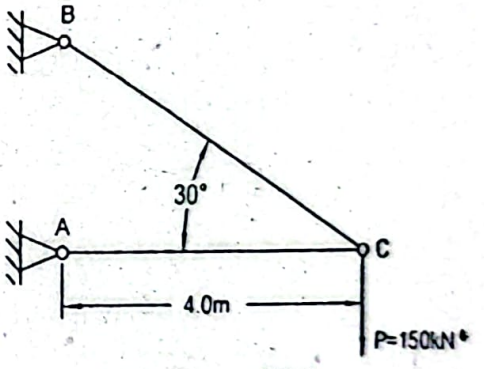

Figure E9.3

Problem E9.4:

Determine the strain energy in the steel beam AB as shown in Figure E9.4. Neglect the effect of direct shear stress. Modulus of elasticity of steel is $200GPa$.

Ans.: $U = 98.77Nm$

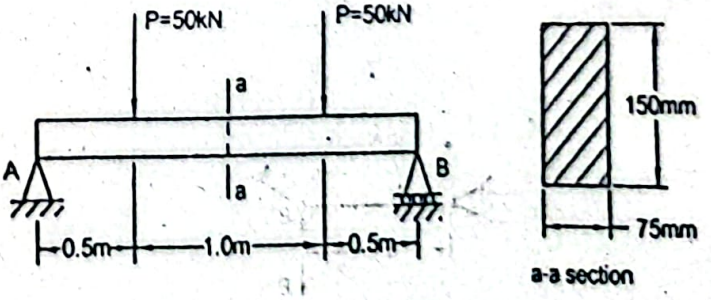

Figure E9.4

Problem E9.5:

Determine the total strain energy in a steel cantilever beam with a distributed load as shown in Figure E9.5 considering both the bending and shear. Also determine the per cent strain energy due to shear. Modulus of elasticity and modulus of rigidity of steel are respectively $200GPa$ and $80GPa$.

Ans.: $U = 57.32Nm$; 0.003%

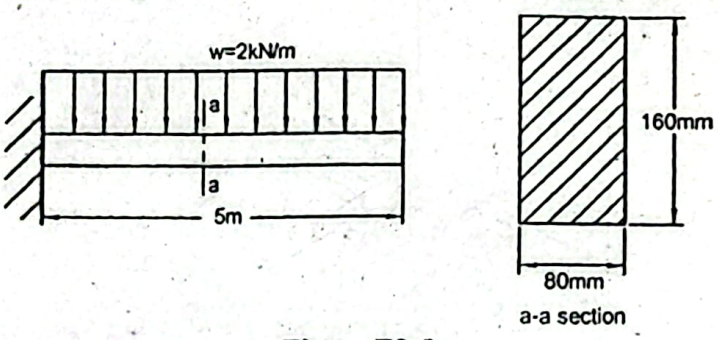

Figure E9.5

Problem E9.6:

A simply supported beam carries two symmetrical loads as shown in Figure E9.6. Using Castigliano's theorem, determine the deflection at the point of application of the load.

Ans.: $\delta_v = \dfrac{5PL^3}{162EI} \downarrow$

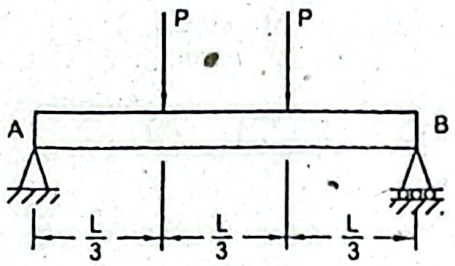

Figure E9.6

Problem E9.7:

A truss consisting of two members, each of the same material and cross-section supports a load P at B as shown in Figure E9.7. Find the horizontal and vertical deflections of the point B using Castigliano's theorem.

Ans.: $\delta_{xB} = -0.289\dfrac{PL}{AE}$; $\delta_{yB} = 1.501\dfrac{PL}{AE}$

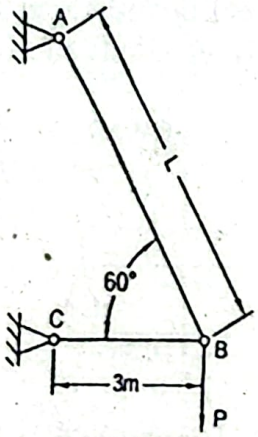

Figure E9.7

oblem E9.8:

bar of semi-circular shape of radius R in horizontal plane is subjected to a ncentrated load P at its free end as shown in Figure E9.8. Determine the deflection at free end of the bar using Castigliano's theorem. Neglect shear.

Ans.: $\frac{3PR^3\pi}{2EI}$

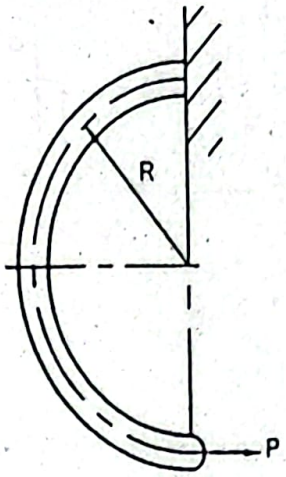

Figure E9.8

roblem E9.9:

stress element at a critical point of a machine component is shown in Figure E9.9. ield strength of the machine component material is $300MPa$. Using the maximum shear tress theory, determine the normal stress σ_y so that the yielding just occurs.

Ans.: $\sigma_y = -143.6MPa$

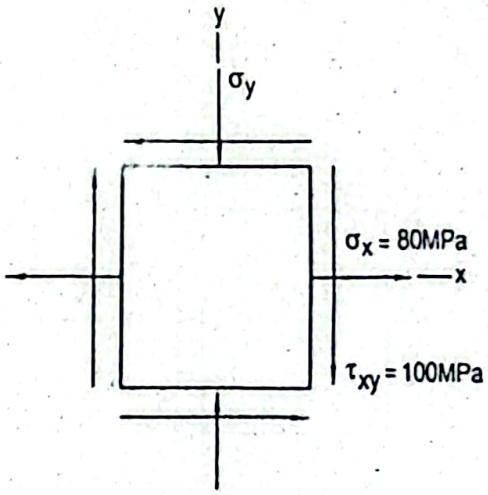

Figure E9.9

Problem E9.10:

A stress element at a critical point of a solid circular steel shaft of diameter $50mm$ is shown in Figure E9.10. Yield strength of the shaft material is $280MPa$. Using the maximum shear stress theory, determine the applied torque on the shaft for which yielding will reach.

Ans.: $T_0 = 1.963kNm$

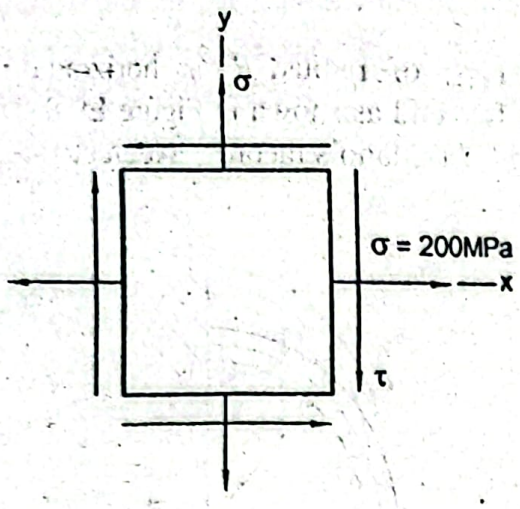

Figure E9.10

Problem E9.11:

A closed ends thin-walled cylindrical pressure vessel is subjected to an internal fluid pressure p_i, a twisting moment T and an axial compressive load P together. A stress element on this pressure vessel is shown in Figure E9.11, where x-axis occurs along the longitudinal axis of the pressure vessel. The internal diameter and thickness of the pressure are respectively $200mm$ and 3mm. Determine p_i, T and P using the maximum shear stress theory. Neglect the buckling effect. Yield strength of the pressure vessel material is $250MPa$ and the safety factor based on yield strength is 2.5.

Ans.: $p_i = 1.06MPa;\ P = -99.96kN;\ T = 6.67kNm$

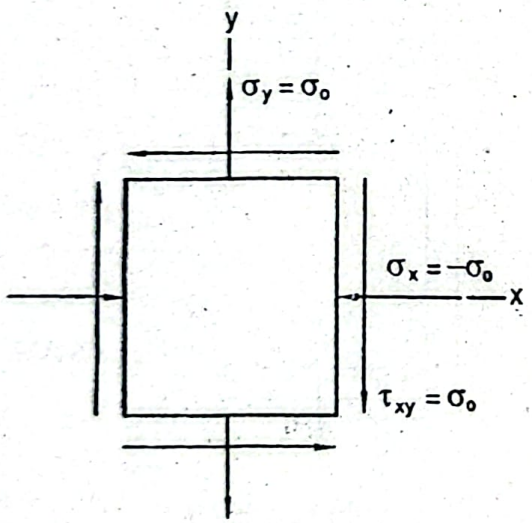

Figure E9.11

Problem E9.12:

A hollow steel shaft of outside diameter d_o twice the inside diameter d_i is subjected to a twisting moment $3.0kNm$ together with a bending moment $4.5kNm$. Yield strength of the shaft material is $350MPa$. Factor of safety based on yield strength is 2.5. Determine the shaft diameter using (a) the maximum normal stress theory, (b) the maximum shear stress theory and (c) the maximum distortion energy theory.

Ans.: $(a)\, d_o = 72.70mm,\ (b)\, d_o = 74.87mm\ (c)\, d_o = 73.88mm$

oblem E9.13:

solid circular steel shaft is subjected to an axial tensile load of $250kN$ together with a isting moment of $2.5kNm$. Yield strength of the shaft material and the factor of safety respectively $350MPa$ and 2.5. Determine the shaft diameter using the maximum ear stress theory.

Ans.: $d = 13.16mm$

roblem E9.14:

solid circular steel shaft is subjected to a bending moment of $2.5kNm$ together with a isting moment of $1.5kNm$. Yield strength of the shaft material is $320MPa$ and the fety factor is 2.25 based on the yield strength. Determine the shaft diameter using (a) e maximum shear stress theory and (b) the maximum distortion energy theory

Ans.: $d = 59.33mm$; $d = 58.65mm$

Chapter X

Combined Stress, Curved Beam and Thick-Walled Cylinder

Question10.1: Give a brief idea about combined stress

Answer:

We know three basic types of loadings and the corresponding stress formulas as follows,

(a) For axial loading axial stress is, $\sigma_a = \frac{P}{A}$ (10.1

(b) For torsional loading torsional stress is, $\tau = \frac{Tr}{J}$ (10.2

(c) For flexural loading flexure stress is, $\sigma_f = \frac{My}{I}$ (10.3

where,

P = Axial load

A = Cross-sectional area of member

T = Applied torque

J = Polar moment of inertia

r = Radius of circular member

M = Applied bending moment

I = Area moment of inertia

y = Distance of fiber from neutral axis

When any two of the basic loadings or all of them act on a member simultaneously, the stress developed on the member is called the *combined stress*. There may be four possible combinations of these three basic stresses, which are as follows,

(a) Axial and flexural

(b) Axial and torsional

(c) Torsional and flexural

(d) Axial, torsional and flexural

Figure 10.1 shows a member which is subjected to a combined stress consisting of the axial and flexure stresses. An eccentric loading is applied in the member as shown in Figure 10.1a. Equal and opposite forces are applied in the member along the line passing through the centroid of the member as shown in Figure 10.1b. The eccentric loading has been ultimately transformed into an equivalent centroidal loading and a couple, which is shown in Figure 10.1c. Figure 10.1d shows a cut section of the member with a resisting centroidal loading and a couple at the cut section.

Axial tensile stress and flexure stress are developed due to the centroidal load P and the couple M respectively. The centroidal load generates uniform axial stress as shown in Figure 10.1e while the couple generates flexure stress as shown in Figure 10.1f. The combined stress consisting of these two stresses is shown in Figure 10.1g. At the point A

the stresses are subtracted and at the point B they are added. The expressions of the combined stresses at the points A and B are respectively,

$$\sigma_A = \sigma_a - \sigma_f = \frac{P}{A} - \frac{Mc}{I} = \frac{P}{A} - \frac{Pec}{I} \quad (10.4)$$

$$\sigma_B = \sigma_a + \sigma_f = \frac{P}{A} + \frac{Mc}{I} = \frac{P}{A} + \frac{Pec}{I} \quad (10.5)$$

where,

e = Eccentricity

c = Distance of outer fiber from centroidal axis

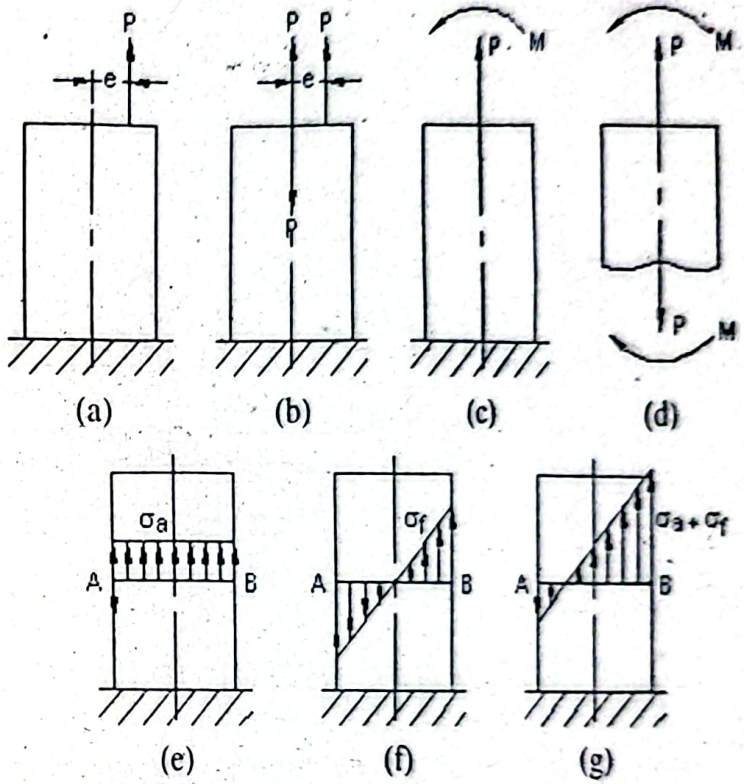

Figure 10.1: Member Subjected to Combined Stress.

C-clamp, punch press, propeller shaft, column with eccentric load, spring etc. are the examples where combined stress is generated.

A C-clamp as shown in Figure 10.2a is subjected to a load of P. In Figure 10.2b the applied load P has been replaced by an equivalent couple M and a load P passing through the centroid of section of the C-clamp. The Figure 10.2c shows the section of the C-clamp with a resisting moment M and reaction P. Due to the bending moment M and load P passing through the centroid of the section a flexure stress σ_f and a uniform axial stress σ_a are respectively developed which are shown in Figure 10.2d. These stresses yield a combined stress at the inner fiber of the C-clamp which is,

$$\sigma_{in} = \sigma_a + \sigma_{f_{in}} \quad (10.6)$$

And a combined stress at the outer fiber which is,

$$\sigma_{out} = \sigma_a - \sigma_{f_{out}} \quad (10.7)$$

In reality the combined stress at the inner fiber will be tensile and that at the outer fiber will be compressive for these stresses.

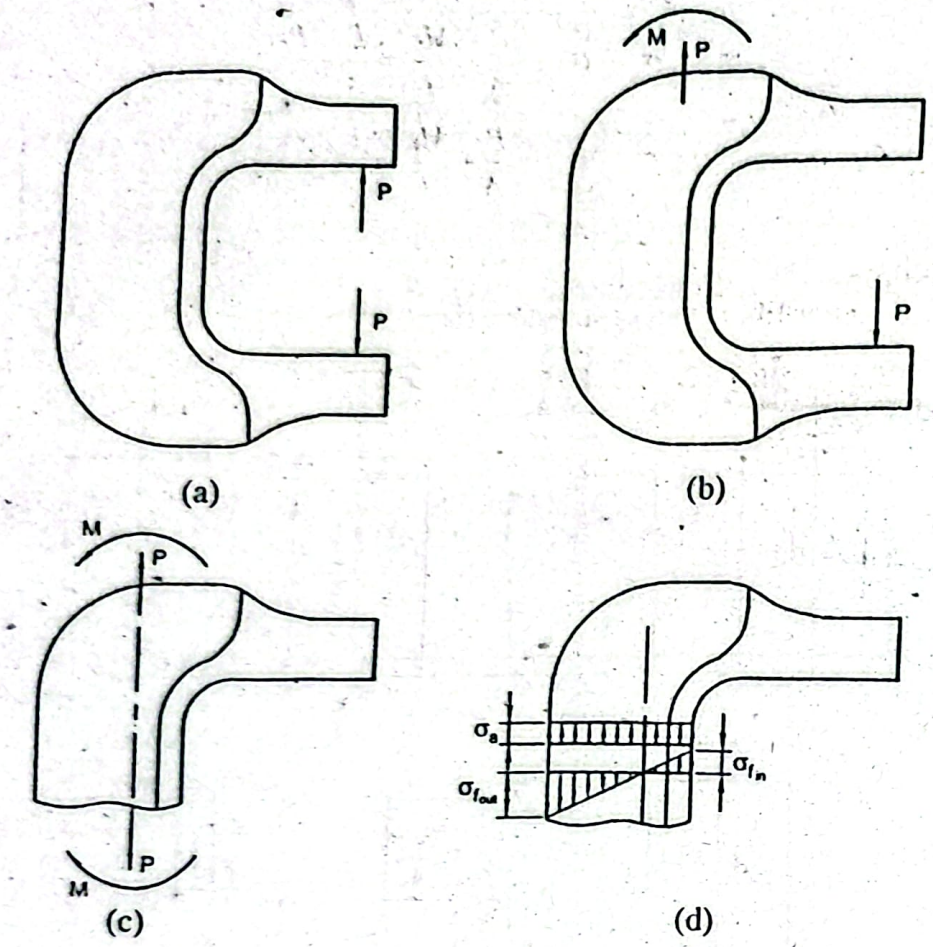

Figure 10.2: C-clamp Subjected to Combined Stress.

Question10.2: Derive an expression of flexure formula of a curved beam. Write necessary assumptions for derivation.

Answer:

Flexure stress in a curved beam is derived based on the following assumptions:

a) The beam is subjected to pure bending.

b) Cross-section has an axis of symmetry in a plane along the length of the beam.

c) Plane cross-section remains plane after bending.

d) Material of the beam is homogeneous.

e) Modulus of elasticity remains equal in tension and compression.

In case of a curved beam the centroidal axis and the neutral axis are not coincident and also the stress does vary linearly from the neutral axis. The notations as shown in Figure 10.3 are defined as follows,

r_o = Radius of outer fiber of beam

r_i = Radius of inner fiber of beam

h = Depth of beam section

c_o = Distance from neutral axis to outer fiber

c_i = Distance from neutral axis to inner fiber

R = Radius of neutral axis of beam

$\bar{r}$ = Radius of centroidal axis of beam

e = Distance between centroidal axis and neutral axis

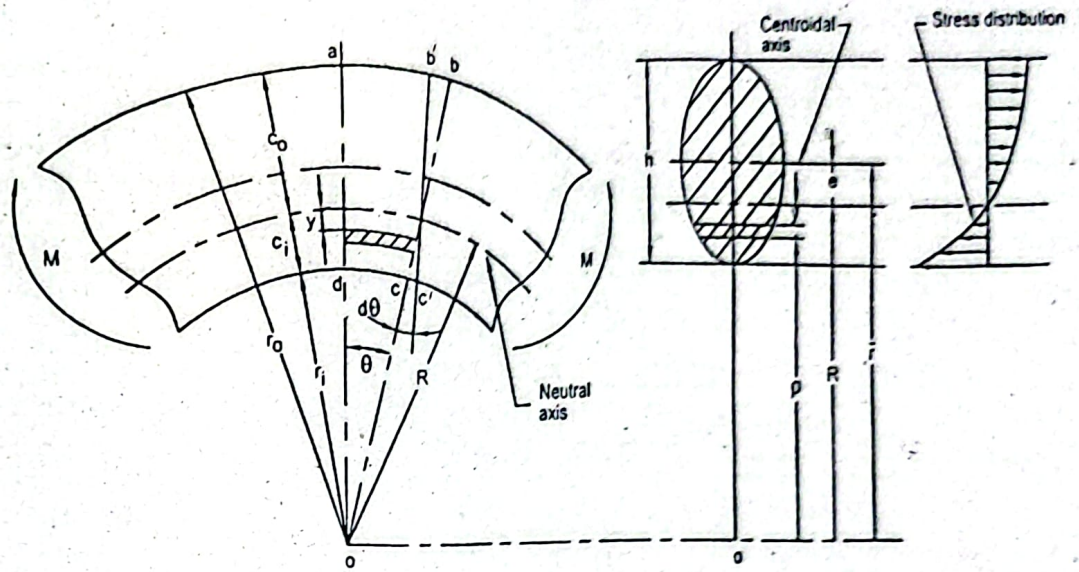

Figure 10.3: A Curved Beam Subjected to Pure Bending.

An element *abcd* of the curved beam is defined by an angle θ. A bending moment M causes section bc to rotate through $d\theta$ to section $b'c'$. The length of a fiber in the element at a distance ρ from the axis o is $\rho\theta$ and it is elongated by $(R-\rho)d\theta$. Therefore, the strain on the fiber at a distance ρ from the center o,

$$\varepsilon = \frac{\delta}{l} = \frac{(R-\rho)d\theta}{\rho\theta} \tag{10.8}$$

Normal stress at this fiber,

$$\sigma = \varepsilon E = E\frac{(R-\rho)d\theta}{\rho\theta} \tag{10.9}$$

Since there are no other external forces acting on the beam, the sum of the normal forces acting on the section must be zero. Therefore,

$$\Sigma P_n = 0: \qquad \int \sigma dA = \int E\frac{d\theta}{\theta}\frac{(R-\rho)}{\rho}dA = 0 \tag{10.10}$$

But E, R, θ and $d\theta$ are constants at any one section of a stressed beam, as a result taking them outside the integral sign and rearranging, one finds,

$$E\frac{d\theta}{\theta}\left(R\int\frac{dA}{\rho} - \int dA\right) = 0 \tag{10.11}$$

$$\text{or, } \left(R\int\frac{dA}{\rho}-\int dA\right)=0$$

$$\text{or, } R\int\frac{dA}{\rho}-A=0$$

$$\text{or, } R=\frac{A}{\int\frac{dA}{\rho}} \qquad (10.12)$$

This equation is used to determine the location of the neutral axis with respect to the center of curvature *o* of the cross-section. This equation indicates that the neutral axis and centroidal axis are not coincident.

Now to derive the expression of the flexure stress the external applied bending moment is equated to the internal resisting moment, which gives,

$$M=\int y\sigma dA=\int(R-\rho)\sigma dA$$

Substituting the value of σ from Equation (10.9) one finds,

$$M=E\frac{d\theta}{\theta}\int\frac{(R-\rho)^2}{\rho}dA \qquad (10.13)$$

We know $(R-\rho)^2=R^2-2\rho R+\rho^2$, therefore, Equation (10.13) can be written as,

$$M=E\frac{d\theta}{\theta}\left(R^2\int\frac{dA}{\rho}-R\int dA-R\int dA+\int\rho dA\right)$$

But R is constant and the first two terms is zero as shown by Equation (10.11), therefore,

$$M=E\frac{d\theta}{\theta}\left(-R\int dA+\int\rho dA\right)$$

But we know $\int dA=A$ and $\int\rho dA=\bar{r}A$, therefore,

$$M=E\frac{d\theta}{\theta}(\bar{r}-R)A=E\frac{d\theta}{\theta}eA \qquad (10.14)$$

From Equation (10.9) we can write,

$$E\frac{d\theta}{\theta}=\frac{\sigma\rho}{(R-\rho)}$$

Substituting this value in Equation (10.14),

$$M=\frac{\sigma\rho}{(R-\rho)}eA$$

$$\text{or, } \sigma=\frac{M(R-\rho)}{\rho eA}=\frac{My}{Ae(R-y)} \qquad (10.15)$$

s is the *flexure formula* for a curved beam. This equation also indicates that the stress ribution in a curved beam is of hyperbolic pattern. The maximum stresses at the inner outer fibers are respectively obtained from,

$$\sigma_i = \frac{Mc_i}{Aer_i} \text{ and } \sigma_o = \frac{Mc_o}{Aer_o} \qquad (10.16)$$

as been observed that maximum stress always occurs at the inner fiber. Bending ment is computed with respect to the centroidal axis, not about the neutral axis.

estion 10.3: Derive expressions of radial and tangential stresses for a thick-walled inder.

swer:

en the wall thickness of a cylindrical pressure vessel is greater than one twentieth of radius i.e. $t \geq \frac{r}{20}$, t being the thickness and r being the radius of the pressure vessel, pressure vessel is called the *thick-walled cylindrical pressure vessel.* Hydraulic inders, gun barrels and pipe carrying fluids at high pressure are examples of thick-lled cylindrical pressure vessels. Thick-walled cylindrical pressure vessels are jected to radial and tangential stresses which depend on the radius of the cylinder. To d the radial stress σ_r and tangential stress σ_t it is assumed that longitudinal stress is istant around the circumference of the cylinder.

1833 French Elastician Gabriel Lame' determined the stresses in a thick-walled inder. A section of a cylinder is shown in Figure 10.4. The internal and external radii the cylinder are respectively a and b. The cylinder is subjected to uniform internal and ernal pressures p_i and p_o respectively. An elemental cylindrical strip of radius r and ferential thickness dr is shown in Figure 10.4 with dotted lines. Half section of this mental strip is shown in Figure 10.5 with tangential and radial stresses. The radial esses have been shown as positive that is tensile; therefore, a negative value will licate compressive stress. The length of the elemental cylindrical strip is considered as ity and this length occurs in a direction perpendicular to the paper. We know that the ce is equal the product of pressure and projected area, therefore, the vertical nponent of the external force on the elemental strip is,

$$(\sigma_r + d\sigma_r) \times 2(r + dr) \times 1$$

d that of internal force on the elemental strip is,

$$\sigma_r \times 2r \times 1$$

e vertical force due to the tangential stress is,

$$\sigma_t \times 2dr \times 1$$

the static equilibrium condition the summation of the forces in the vertical direction ll be zero. Therefore, we find,

$$\sum F_r = 0: \qquad (\sigma_r + d\sigma_r) \times 2(r + dr) \times 1 - \sigma_r \times 2r \times 1 - \sigma_t \times 2dr \times 1 = 0$$

ow omitting the product of $drd\sigma_r$ which is small compared to the other terms and rranging the above equation reduces to,

$$r\frac{d\sigma_r}{dr}+2\sigma_r=2A$$

$$\text{or, } r\frac{d\sigma_r}{dr}=2(A-\sigma_r)$$

eparating the variables the equation becomes,

$$\frac{d\sigma_r}{A-\sigma_r}=2\frac{dr}{r}$$

ow integrating,

$$-\ln(A-\sigma_r)=2\ln r+c=\ln r^2+c$$

$$\text{or, } \ln(A-\sigma_r)r^2=-c$$

$$\text{or, } (A-\sigma_r)r^2=e^{-c}=B$$

ere, B is a constant. From the above equation the relation of σ_r becomes,

$$\sigma_r=A-\frac{B}{r^2} \qquad (10.20)$$

stituting the value of σ_r in Equation (10.19) one finds,

$$\sigma_t=A+\frac{B}{r^2} \qquad (10.21)$$

following boundary conditions are used to find the values of the constants A and B,

$$\text{at } r=a,\ \sigma_r=-p_i$$

$$\text{at } r=b,\ \sigma_r=-p_o$$

tituting these boundary conditions in Equation (10.20) we find,

$$-p_i=A-\frac{B}{a^2}$$

$$-p_o=A-\frac{B}{b^2}$$

from the above two equations the values of the constants A and B are obtained as,

$$A=\frac{a^2p_i-b^2p_o}{b^2-a^2}$$

$$B=\frac{a^2b^2(p_i-p_o)}{b^2-a^2}$$

luting these values of constants in Equations (10.20) and (10.21) the expressions of and tangential stresses are respectively obtained as,

$$\sigma_r=\frac{a^2p_i-b^2p_o}{b^2-a^2}-\frac{a^2b^2(p_i-p_o)}{(b^2-a^2)r^2} \qquad (10.22)$$

$$r\frac{d\sigma_r}{dt}+\sigma_r-\sigma_t=0 \qquad (10.1$$

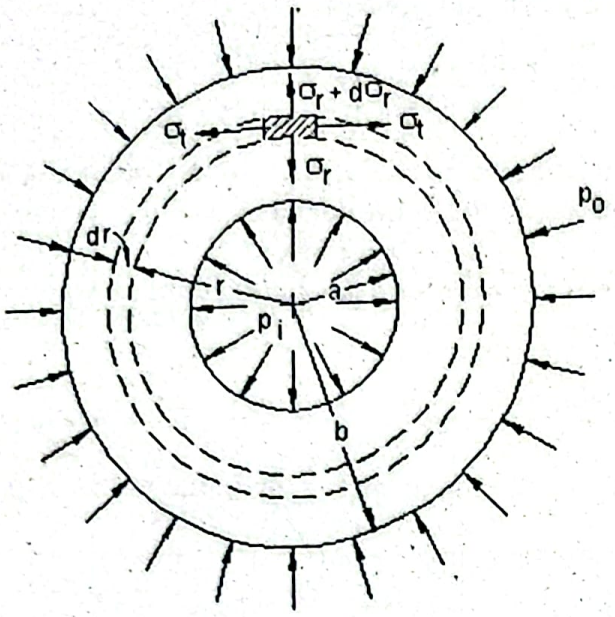

Figure 10.4: A Section of a Cylinder Showing Pressures and Stresses.

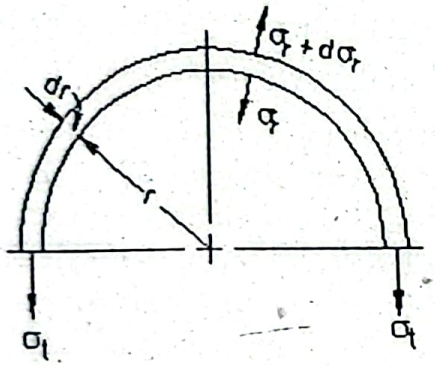

Figure 10.5: Half Section of an Elemental Cylindrical Strip Showing Stresses.

Based on the assumption that plane cross-section remains plane after deformati applying Hooke's law for triaxial stresses, a relation for longitudinal strain ε_z is obtai as,

$$\varepsilon_z=\frac{1}{E}[\sigma_z-\nu(\sigma_r+\sigma_t)] \qquad (10.$$

where,

σ_z = Stress in longitudinal direction

ν = Poisson's ratio

The terms σ_z, E, ε_z and ν are constants, as a result the quantity $(\sigma_r+\sigma_t)$ is cons throughout the cross-section. Considering this constant as $2A$ we find,

$$\sigma_r+\sigma_t=2A \qquad (10$$

Now adding Equations (10.17) and (10.19),

$$\sigma_t = \frac{a^2 p_i - b^2 p_o}{b^2 - a^2} + \frac{a^2 b^2 (p_i - p_o)}{(b^2 - a^2) r^2} \qquad (10.23)$$

Question10.4: Find expressions of maximum radial and tangential stresses for a thick-walled cylinder when (a) external pressure is zero (b) internal pressure is zero.

Answer:

(a) Inserting the value of external pressure $p_o = 0$ in Equations (10.22) and (10.23) and simplifying. the expressions of radial and tangential stresses are respectively found as,

$$\sigma_r = \frac{a^2 p_i}{b^2 - a^2}\left(1 - \frac{b^2}{r^2}\right) \qquad (10.24)$$

$$\sigma_t = \frac{a^2 p_i}{b^2 - a^2}\left(1 + \frac{b^2}{r^2}\right) \qquad (10.25)$$

The radial and tangential stress distributions are shown in Figures 10.6a and 10.6 respectively,

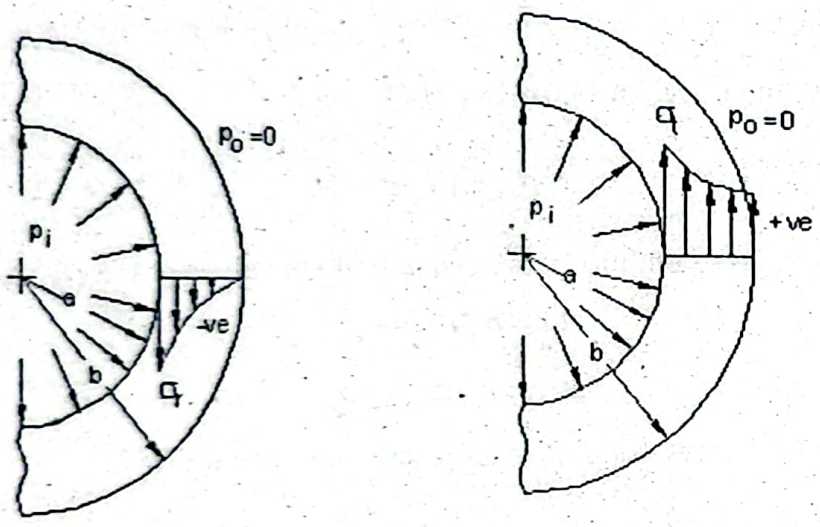

(a) (b)

Figure 10.6: Radial and Tangential Stress Distributions at $p_o = 0$.

The maximum stresses occur at the inner surface of the cylinder, where $r = a$ and th are found as,

$$\sigma_{r\,max} = -p_i \qquad (10.2$$

$$\sigma_{t\,max} = p_i \frac{b^2 + a^2}{b^2 - a^2} \qquad (10.2$$

(b) Substituting the value of internal pressure $p_i = 0$ in Equations (10.22) and (10.23) find,

$$\sigma_r = -\frac{p_o b^2}{b^2 - a^2}\left(1 - \frac{a^2}{r^2}\right) \qquad (10.$$

$$\text{and } \sigma_t = -\frac{p_o b^2}{b^2 - a^2}\left(1 + \frac{a^2}{r^2}\right) \tag{10.29}$$

Radial stress is maximum at $r = b$ and tangential stress is maximum at $r = a$. Substituting these values in Equations (10.28) and (10.29) we obtain the relations of the maximum radial and tangential stresses as,

$$\sigma_{r_{max}} = -p_o \tag{10.30}$$

$$\text{and } \sigma_{t_{max}} = -p_o \frac{2b^2}{b^2 - a^2} \tag{10.31}$$

t can be observed from Equation (10.31) that as b becomes very large compared to a e.g. n a cylinder with a small central hole $\sigma_{t_{max}}$ approaches to the value of $-2p_o$.

Question 10.5: Find expressions of longitudinal stress for a thick-walled cylinder.

nswer:

thick-walled cylindrical pressure vessel is shown in Figure 10.7 showing the ngitudinal stress. This stress distribution in the section of the cylinder is assumed to be iiform. As a result in the static equilibrium condition we obtain,

$$p_i \pi a^2 = \pi\left(b^2 - a^2\right)\sigma_l$$

here, σ_l = Longitudinal stress. The longitudinal stress is expressed as,

$$\text{or, } \sigma_l = \frac{p_i a^2}{b^2 - a^2} \tag{10.32}$$

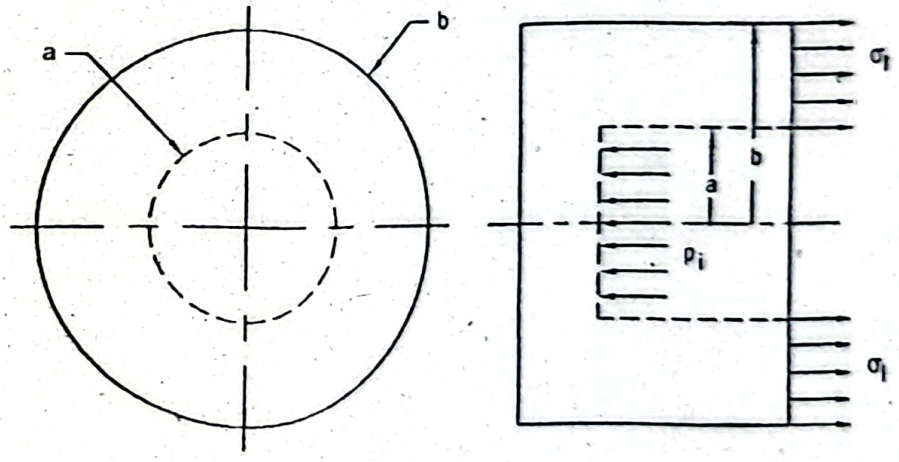

Figure 10.7: Longitudinal Stress in a Thick-walled Cylinder.

SOLVED PROBLEMS

blem P10.1:

open link chain is fabricated from mild steel rod of *15mm* diameter as shown in re P10.1. If the normal stress is not to exceed *120MPa* in the straight portion, rmine the maximum load P that can be applied.

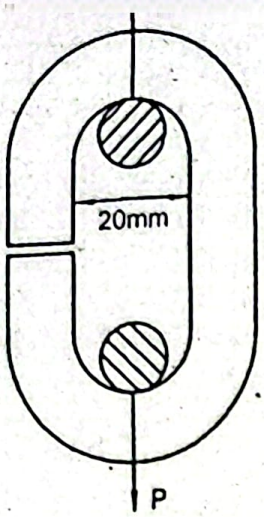

Figure P10.1

Given Data:

Diameter of link rod, $d = 15mm$

Allowable normal stress, $\sigma_a = 120MPa$

To Find:

- Maximum load, P

Solution:

A section of the link is shown below with resisting moment and force.

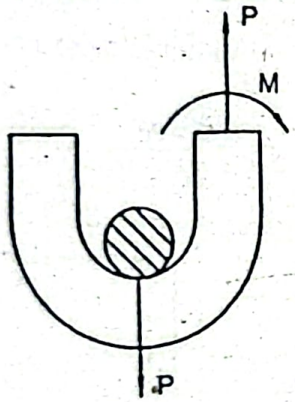

Resisting moment, $M = P \times \left(10 + \frac{15}{2}\right) Nmm = 17.5P\ Nmm$

Normal stress at the inner fiber, $\sigma_i = \frac{P}{A} + \frac{Mc}{I}$

or, $\sigma_a = \frac{P}{A} + \frac{17.5P\ c}{I}$

or, $120 = \frac{4P}{\pi \times 15^2} + \frac{17.5 \times P \times 15/2}{\frac{\pi \times 15^4}{64}}$

or, $P = 2052N = 2.05kN$

Normal stress at the outer fiber, $\sigma_o = \frac{P}{A} - \frac{Mc}{I}$

or, $\sigma_a = \frac{P}{A} - \frac{17.5P \times c}{I}$

$$\text{or, } -120 = \frac{4P}{\pi \times 15^2} - \frac{17.5 \times P \times 15/2}{\frac{\pi \times 15^4}{64}}$$

$$\text{or, } P = 2545N = 2.55kN$$

Therefore, the required load, $P = 2.05kN$ *Answer*

Problem P10.2:

A concrete pillar supports a load P as shown in Figure P10.2. If the allowable stresses in tension and compression are respectively $0.6MPa$ and $7MPa$, determine the maximum load P that can be supported.

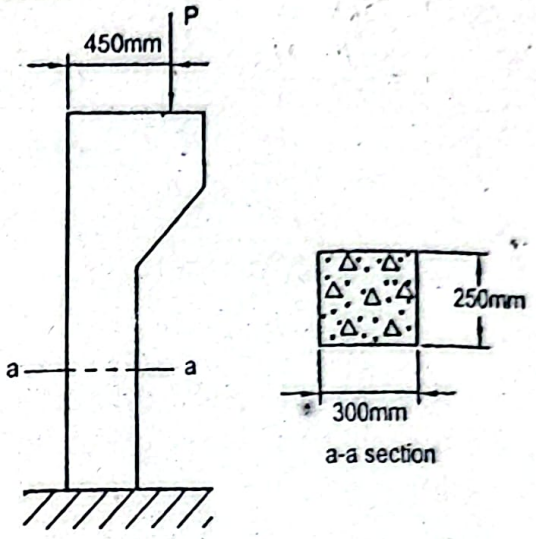

Figure P10.2

Given Data:

Allowable stress in tension, $\sigma_{t_a} = 0.6MPa$

Allowable stress in compression, $\sigma_{c_a} = 7MPa$

To find:

Maximum load, P

Solution:

The figure below shows the bending moment and force acting on the concrete pillar.

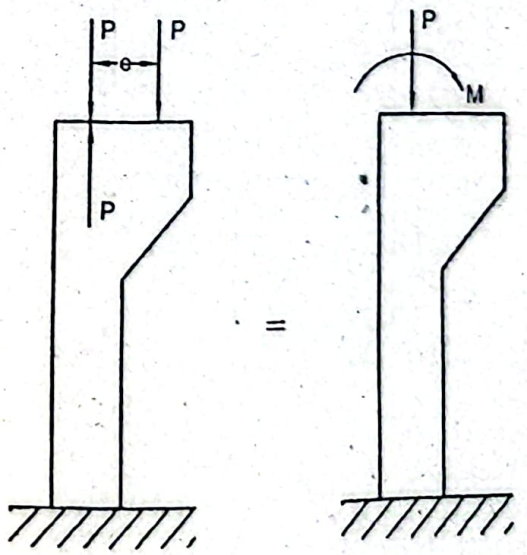

Eccentricity, $e = \left(450 - \frac{300}{2}\right) mm = 300mm$

Bending moment, $M = P \times e = 300P$

Normal stress at the inner fiber, $\sigma_i = -\left(\frac{P}{A} + \frac{Mc}{I}\right)$

$$\text{or, } \sigma_{c_a} = -7 = -\left(\frac{P}{300 \times 250} + \frac{P \times 300 \times \frac{300}{2}}{\frac{1}{12} \times 250 \times 300^3}\right)$$

$$\text{or, } P = 75kN$$

Normal stress at the outer fiber, $\sigma_o = -\frac{P}{A} + \frac{Mc}{I}$

$$\text{or, } \sigma_{t_a} = 0.6 = -\frac{P}{300 \times 250} + \frac{P \times 300 \times 300/2}{\frac{1}{12} \times 250 \times 300^3}$$

$$\text{or, } P = 9kN$$

Therefore, the required maximum load, $P = 9kN$ *Answer*

Problem P10.3.

A load P is applied eccentrically on a solid circular cylinder of diameter $100mm$ as shown in Figure P10.3. If the normal stress is not to exceed $125kN$, determine the maximum load P that can be applied.

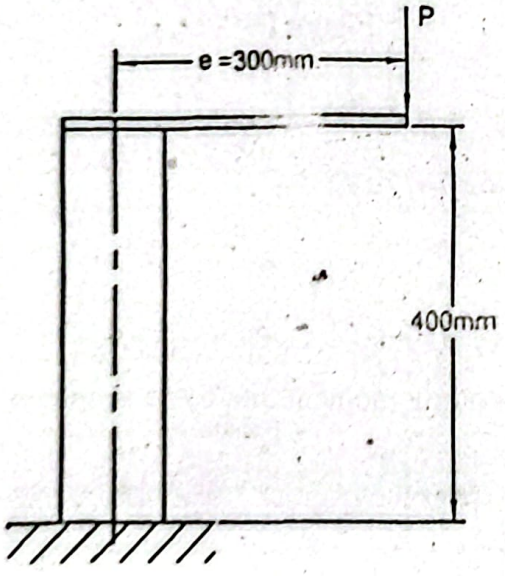

Figure P10.3

Given Data:

Diameter, $d = 100mm$

Allowable normal stress, $\sigma_a = 125kN$

To Find:

- Maximum load, P

Solution:

The figure below shows the combined action of the bending moment and force acting on the column.

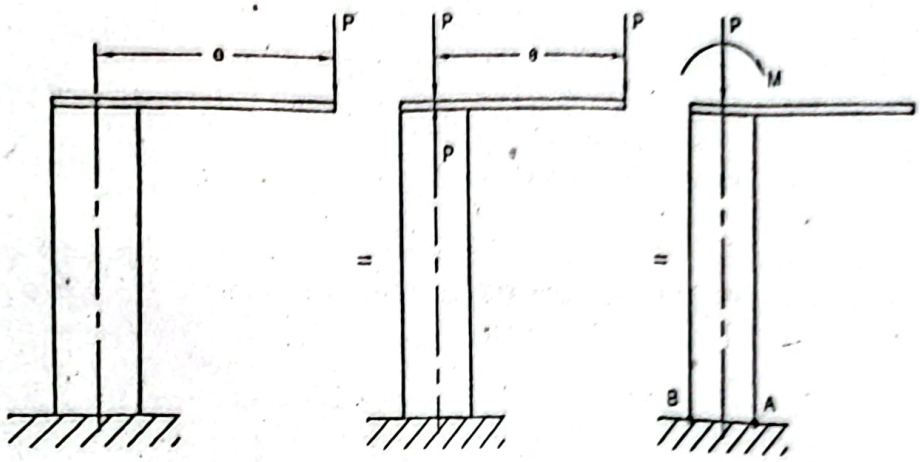

ormal stress at the point A, $\sigma_A = -\frac{P}{A} - \frac{Mc}{I}$

ormal stress at the point B, $\sigma_B = -\frac{P}{A} + \frac{Mc}{I}$

at is, $|\sigma_A|$ is maximum.

w balancing $\sigma_A = -\sigma_a$ we obtain,

$$\sigma_a = \frac{P}{A} + \frac{Mc}{I}$$

$$\text{or, } \sigma_a = \frac{4P}{\pi d^2} + \frac{P \times e \times c \times 64}{\pi d^4}$$

$$\text{or, } 125 = \frac{4P}{\pi \times 100^2} + \frac{P \times 300 \times 50 \times 64}{\pi (100)^4}$$

$$\text{or, } P = 39.27kN \text{ Answer}$$

blem P10.4:

ollow circular steel vertical member supports a mass $m = 5tons$ by a rope, which es over a smooth pulley as shown in Figure P10.4. The member also supports a le load $T = 100kN$. If the outside and inside diameters of the member are ctively $100mm$ and $50mm$, determine the maximum normal stress developed at the -in end of the member.

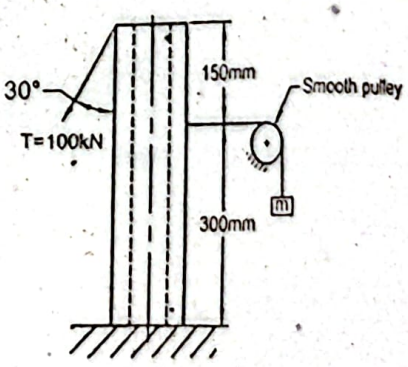

Figure P10.4

Given Data:

Outside diameter, $d_o = 100mm$

Inside diameter, $d_i = 50mm$

Tension, $T = 100kN$

Mass, $m = 5tons$

To Find:

- Maximum normal stress at built-in end, σ_{max}.

Solution:

The figure below shows that the hollow circular vertical member is subjected to the combined action of the bending moment and forces.

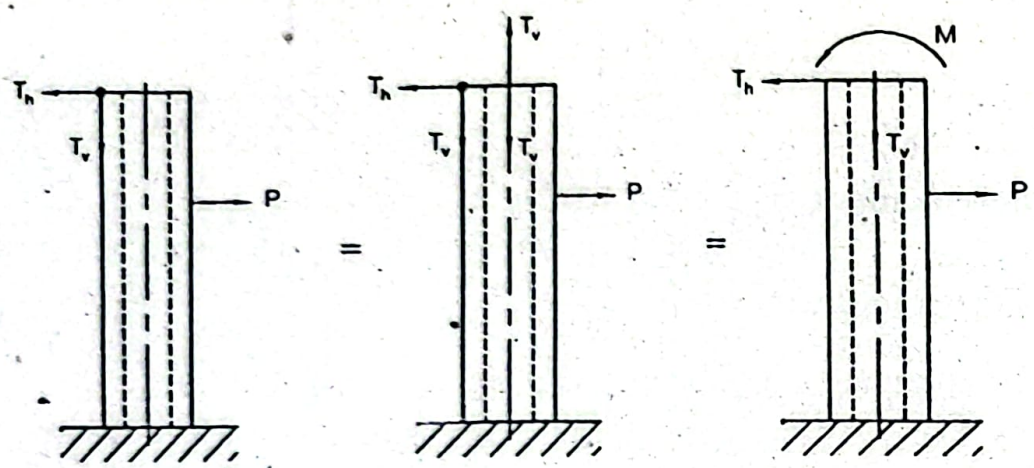

Cross-sectional area, $A = \frac{\pi}{4}\left(d_o^2 - d_i^2\right) = \frac{\pi}{4}\left(100^2 - 50^2\right)mm^4 = 5890.49mm^4$

Moment of inertia, $\bar{I} = \frac{\pi}{64}\left(d_o^4 - d_i^4\right) = \frac{\pi}{64}\left(100^4 - 50^4\right)mm^4 = 4601942.36mm^4$

Load due to mass, $P = mg$

$= 5 \times 10^3 \times 9.81N = 49.05kN$

Vertical tension, $T_v = T\cos 30^0 = 100\cos 30^0 = 86.6kN$

Horizontal tension, $T_h = T\sin 30^0 = 100\sin 30^0 = 50kN$

Bending moment, $M = T_v \times \frac{d_o}{2}$

$= \frac{86.6 \times 100}{2} Nm = 4330Nm$

Moment at the built-in end of the member,

$M_o = T_h \times 450 + M - P \times 300$

$= 50 \times 450 + 4330 - 49.05 \times 300$

$= 12115Nm$

Therefore, the maximum normal stress at the built-in end,

$$\sigma_{max} = -\frac{M_o c}{\bar{I}} - \frac{P_v}{A}$$

$$= -\frac{12115 \times 10^3 \times 50}{4601942.36} - \frac{50 \times 10^3}{5890.49} = -140.12MPa$$

at is, $\sigma_{max} = 140.12MPa$ (Compressive) ***Answer***

oblem P10.5:

bracket of uniform rectangular cross-section is subjected to a load P as shown in gure P10.5. If the normal stress is limited to $100MPa$ at the built-in end, determine the ximum load P that can be supported.

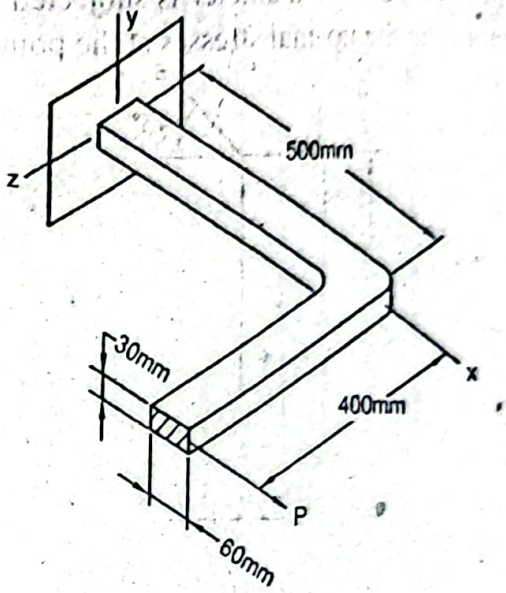

Figure P10.5

en Data:

iting normal stress, $\sigma_a = 100MPa$

ind:

ximum load, P

tion:

figure below shows that the bracket is under the combined action of the bending ent and force.

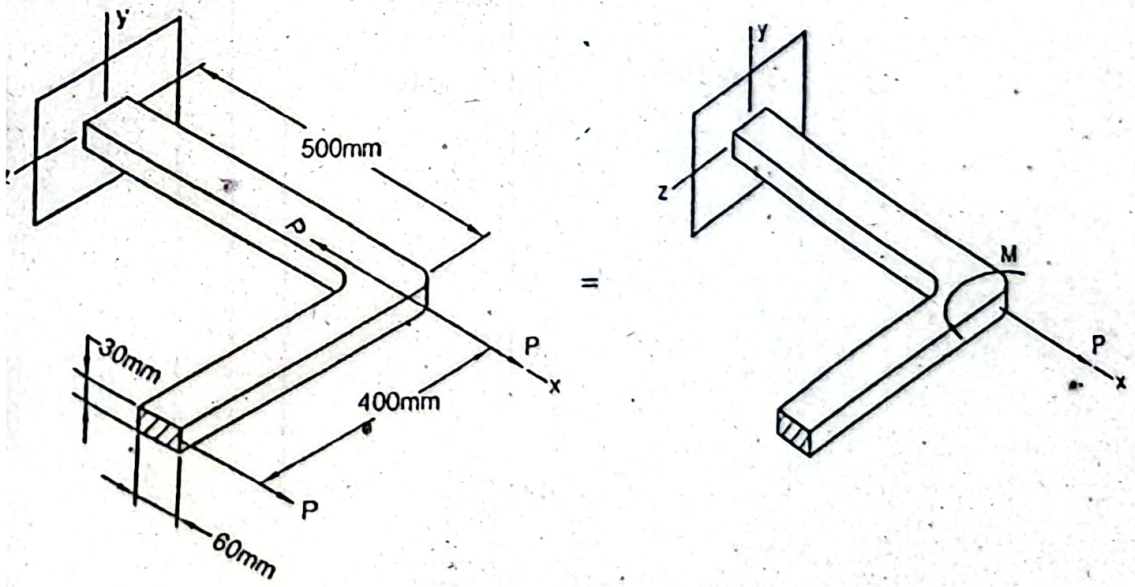

ling moment, $M = P \times 400Nmm$

imum normal stress at the built-in end,

$$\sigma = \frac{Mc}{I} + \frac{P}{A}$$

$$\text{or, } \sigma_a = 100 = \frac{400P \times 30}{\frac{1}{12} \times 30 \times 60^3} + \frac{P}{30 \times 60}$$

$$\text{or, } P = 4.4kN \text{ Answer}$$

Problem P10.6:

A solid circular steel cylinder of $120mm$ diameter is subjected to a load $P = 125kN$ as shown in Figure P10.6. Determine the normal stresses at the points A and B.

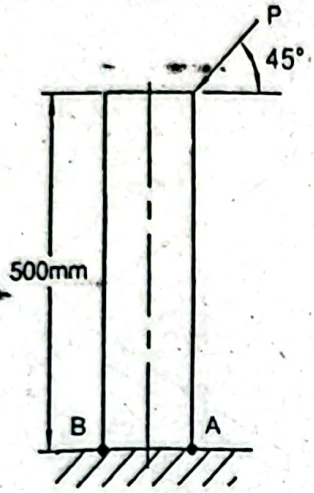

Figure P10.6

Given Data:

Diameter, $d = 120mm$

Load, $P = 125kN$

To Find:

- Maximum stress at point A, σ_A
- Normal stress at point B, σ_B

Solution:

The following figure shows that the solid circular cylinder is under the combined effect of the bending moment and force.

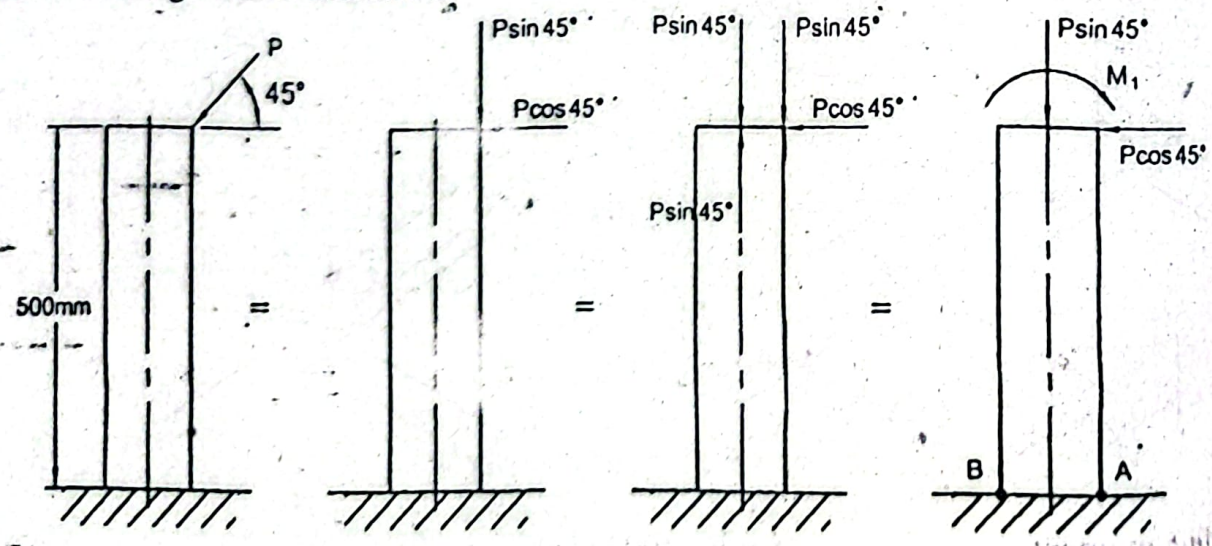

Cross-sectional area, $A = \frac{\pi d^2}{4} = \frac{\pi \times 120^2}{4} mm^2 = 11309.73mm^2$

Moment of inertia, $\bar{I} = \frac{\pi d^4}{64} = \frac{\pi \times 120^4}{64} mm^4 = 10178760.2 mm^4$

Bending moment, $M_1 = P \sin 45^0 \times 60$

$= 125 \sin 45^0 \times 60 Nm = 5303.30 Nm$

Bending moment, $M_2 = P \cos 45^0 \times 500$

$= 125 \cos 45^0 \times 500 Nm = 44194.17 Nm$

Normal stress at the point A,

$$\sigma_A = -\frac{P \sin 45^0}{A} - \frac{M_1 c}{\bar{I}} + \frac{M_2 c}{\bar{I}}$$

$$= -\frac{125 \sin 45^0 \times 10^3}{11309.73} - \frac{5303.30 \times 10^3 \times 60}{10178760.2} + \frac{44194.17 \times 10^3 \times 60}{10178760.2}$$

$= 221.43 MPa$ (Tensile) *Answer*

Normal stress at the point B,

$$\sigma_B = -\frac{P \sin 45^0}{A} + \frac{M_1 c}{I} - \frac{M_2 c}{I}$$

$$= -\frac{125 \sin 45^0 \times 10^3}{11309.73} + \frac{5303.30 \times 10^3 \times 60}{10178760.2} - \frac{44194.17 \times 10^3 \times 60}{10178760.2}$$

$= -237.06 MPa$

That is, $\sigma_B = 237.06 MPa$ (Compressive) *Answer*

Problem P10.7:

A solid bracket ABC of uniform diameter $d = 60mm$ is subjected to a load $P = 7kN$ at its free end such that the load acts in a plane parallel to x-y plane as shown in Figure P10.7. Determine the shearing and normal stresses at the points P and Q at the built-in end.

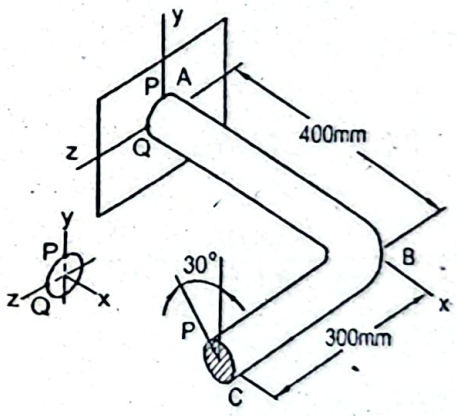

Figure P10.7

Given Data:

Diameter, $d = 60mm$

Load, $P = 7kN$

To Find:

Shearing stresses at points P and Q, τ_P and τ_Q

Normal stresses at points P and Q, σ_P and σ_Q

Solution:

The following figure shows that the solid bracket is under the combined action of the bending moment, torque and forces.

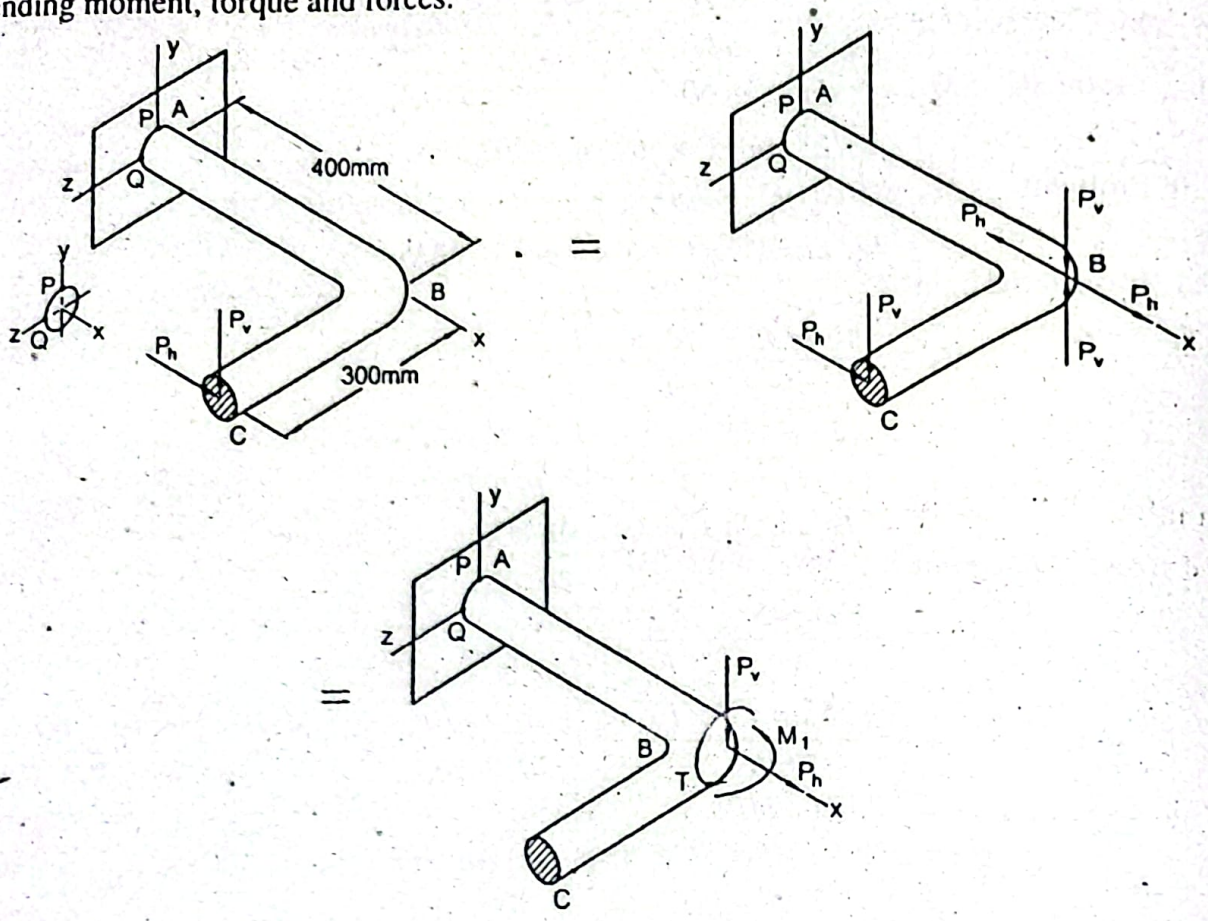

Vertical component, $P_v = P\cos 30^0 = 7\cos 30^0 = 6.06kN$

Horizontal component, $P_h = P\sin 30^0 = 7\sin 30^0 = 3.5kN$

Torque, $T = P_v \times 300 = 6.06 \times 300Nm = 1818Nm$

Bending moment, $M_1 = P_h \times 300$

$= 3.5 \times 300Nm = 1050Nm$

Bending moment, $M_2 = P_v \times 400$

$= 6.06 \times 400Nm = 2424Nm$

Torsional shearing stress,

$$\tau_{t_P} = \tau_{t_Q} = \frac{Tc}{J} = \frac{16 \times 1818 \times 10^3}{\pi \times 60^3} MPa = 42.87MPa$$

Direct shear stress at the point Q,

$$\tau_{d_Q} = \frac{4P_v}{3A}$$

$$= \frac{4 \times 6.06 \times 10^3 \times 4}{3\pi \times 60^2} MPa = 2.86MPa$$

Therefore, the shearing stress at the point P,

$$\tau_P = \tau_{t_P} = 42.87MPa \text{ Answer}$$

Shearing stress at the point Q,

$$\tau_Q = \tau_{tQ} + \tau_{dQ}$$
$$= (42.87 + 2.86)MPa = 45.73MPa \text{ Answer}$$

Bending stress at the point P,

$$\sigma_{bP} = \frac{M_2 c}{I} = \frac{32M_2}{\pi d^3}$$
$$= \frac{32 \times 2424 \times 10^3}{\pi \times 60^3} MPa = 114.35MPa$$

Bending stress at the point Q,

$$\sigma_{bQ} = \frac{M_1 c}{I} = \frac{32 \times 1050 \times 10^3}{\pi \times 60^3} MPa = 49.51MPa$$

Axial tensile stress, $\sigma_{tP} = \sigma_{tQ} = \frac{P_h}{A} = \frac{3.5 \times 10^3 \times 4}{\pi \times 60^2} MPa = 1.24MPa$

Therefore, the normal stress at the point P,

$$\sigma_P = \sigma_{bP} + \sigma_{tP}$$
$$= (114.35 + 1.24)MPa = 115.59MPa \text{ Answer}$$

And the normal stress at the point Q,

$$\sigma_Q = \sigma_{bQ} + \sigma_{tQ}$$
$$= (49.5 + 1.24)MPa = 50.75MPa \text{ Answer}$$

Problem P10.8:

A steel pipe of outside diameter *75mm* and wall thickness *6mm*, supports a road sign of mass *180kg* on which a wind load of *450N* acts as shown in Figure P10.8. Determine the maximum shearing and normal stresses at the points A and B at the built-in end of the pipe.

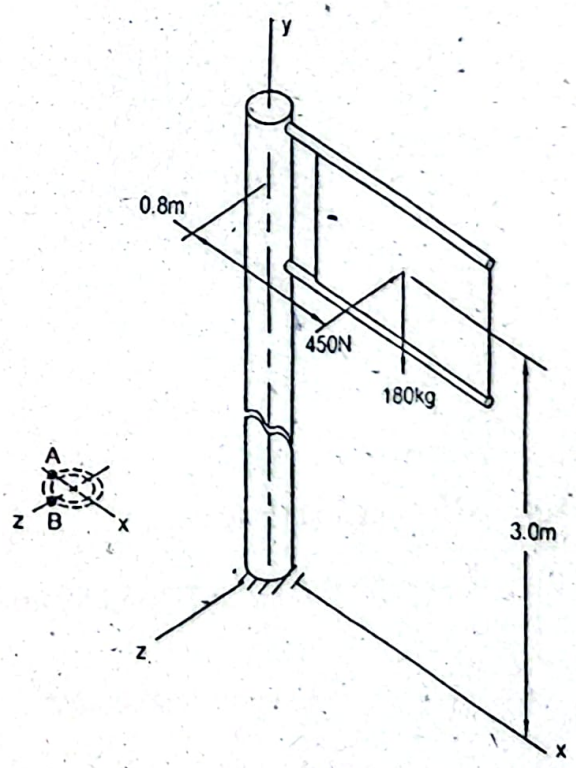

Figure P10.8

Given Data:

Outside diameter of steel pipe, $d_o = 75mm$

Wall thickness, $t = 6mm$

Mass of road sign, $m = 180kg$

Wind load on road sign, $P = 450N$

To Find:

- Maximum shearing stress, τ
- Normal stresses at points A and B, σ_A and σ_B

Solution:

The figure below shows that the pipe is under the combined effect of the bending moment, torque and forces.

Bending moment, $M_1 = W \times 0.8 \times 10^3$

$= 180 \times 9.81 \times 0.8 \times 10^3 Nmm = 1412640Nmm$

Bending moment, $M_2 = P \times 30 \times 10^3$

$= 450 \times 30 \times 10^3 = 1350000Nmm$

Torque, $T = P \times 0.8 \times 10^3$

$= 450 \times 0.8 \times 10^3 Nmm = 360000Nmm$

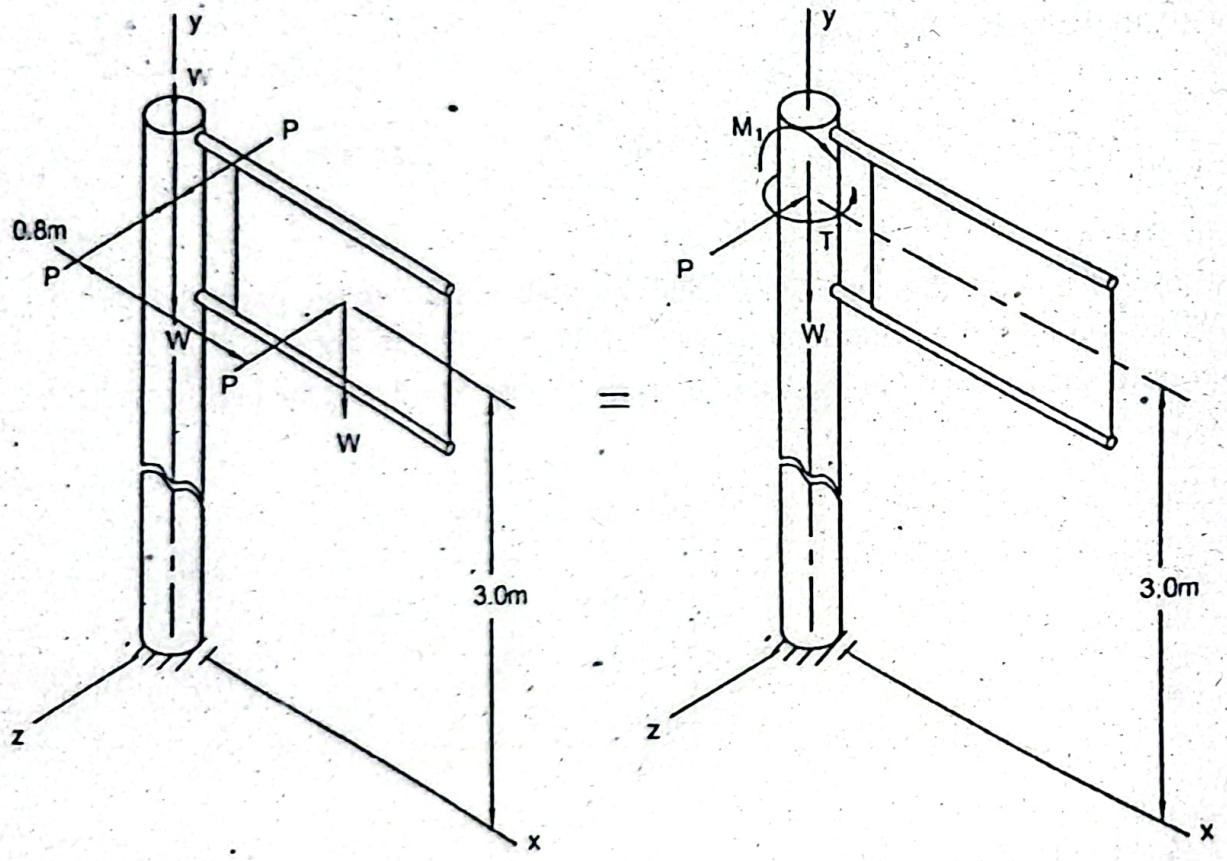

Outside diameter of the pipe, $d_o = 75mm$

Inside diameter of the pipe, $d_i = (75 - 2 \times 6)mm = 63mm$

Moment of inertia, $I = \frac{\pi}{64}(75^4 - 63^4)mm^4 = 779883.88mm^4$

Cross-sectional area, $A = \frac{\pi}{4}(75^2 - 63^2)mm^2 = 1300.62mm^2$

nding stress at the point A, $\sigma_{b_A} = \frac{M_1 c}{I} = \frac{1412640 \times 75/2}{779883.88} MPa = 67.93MPa$

nding stress at the point B, $\sigma_{b_B} = \frac{M_2 c}{I} = \frac{1350000 \times 75/2}{779883.88} MPa = 64.91MPa$

ial stress, $\sigma_{C_A} = \sigma_{C_B} = -\frac{W}{A} = -\frac{180 \times 9.81}{1300.62} MPa = -1.36MPa$

rsional shearing stress on the surface of the pipe,

$$\tau_{t_A} = \tau_{t_B} = \frac{Tc}{J}$$

$$= \frac{360000 \times 75/2}{\frac{\pi}{32}(75^4 - 63^4)} MPa = 8.66MPa$$

rect shear stress at the point A,

$$\tau_{d_A} = \frac{2P}{A} = \frac{2 \times 450}{1300.62} MPa = 0.69MPa$$

aximum shearing stress at the point A,

$$\tau_A = \tau_{t_A} - \tau_{d_A}$$

$$= (8.66 - 0.69)MPa = 7.97MPa \text{ Answer}$$

ximum shearing stress at the point B,

$$\tau_B = \tau_{t_B} = 8.66MPa \text{ Answer}$$

rmal stress at the point A, $\sigma_A = \sigma_{b_A} + \sigma_{C_A}$

$$= (67.93 - 1.36)MPa = -66.57MPa \text{ Answer}$$

rmal stress at the point B, $\sigma_B = \sigma_{b_B} + \sigma_{C_B}$

$$= (64.91 - 1.36)MPa = 63.55MPa \text{ Answer}$$

oblem P10.9:

a drilling machine an axial force $P = 15kN$ is developed in the spindle as shown in gure P10.9. Determine the diameter of the solid circular cast iron column if the tensile ess in the column is not to exceed $32.5MPa$.

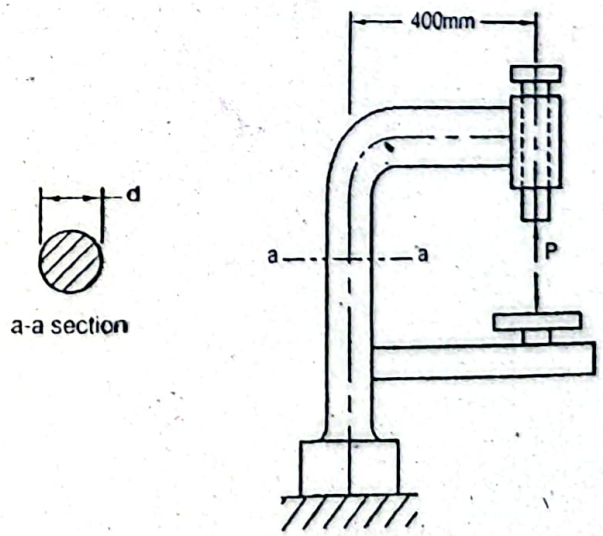

Figure P10.9

Given Data:

Load, $P = 15kN$

Limiting tensile stress, $\sigma_a = 32.5MPa$

To Find:

- Diameter of column, d

Solution:

The figure below shows that the circular column of the drilling machine is under the combined effect of the bending moment and axial force.

Bending moment, $M = P \times 400 = 400 \times 15Nm = 6000Nm$

Tensile stress, $\sigma = \frac{Mc}{I} + \frac{P}{A}$

$$\text{or, } \sigma_a = 32.5 = \frac{6000 \times 10^3 \times d/2}{\frac{\pi}{64}d^4} + \frac{15 \times 10^3}{\frac{\pi d^2}{4}}$$

or, $d = 125mm$ *Answer*

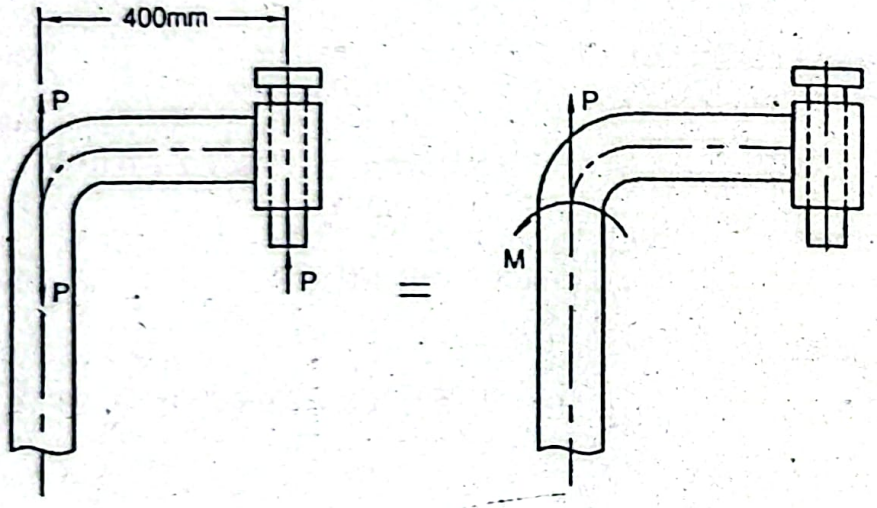

Problem P10.10:

A solid circular bracket of uniform diameter $d = 40mm$ is subjected to a load $P = 4.9kN$ at its free end as shown in Figure P10.10. Determine the torsional and normal stresses at the points A and B.

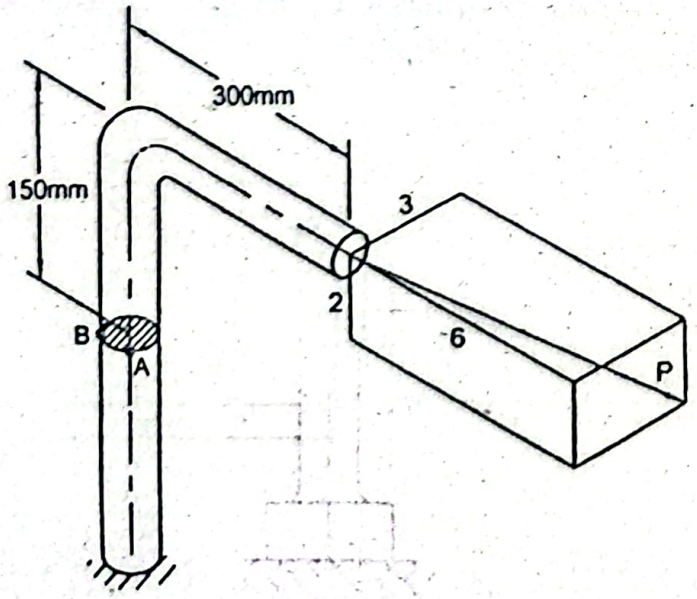

Figure P10.10

en Data:
meter, $d = 40mm$
d, $P = 4.9kN$

Find:
earing stresses at points A and B, τ_A and τ_B
rmal stresses at points A and B, σ_A and σ_B

tion:
e components of the applied load are shown in the figure below at the free end of the
circular bracket.

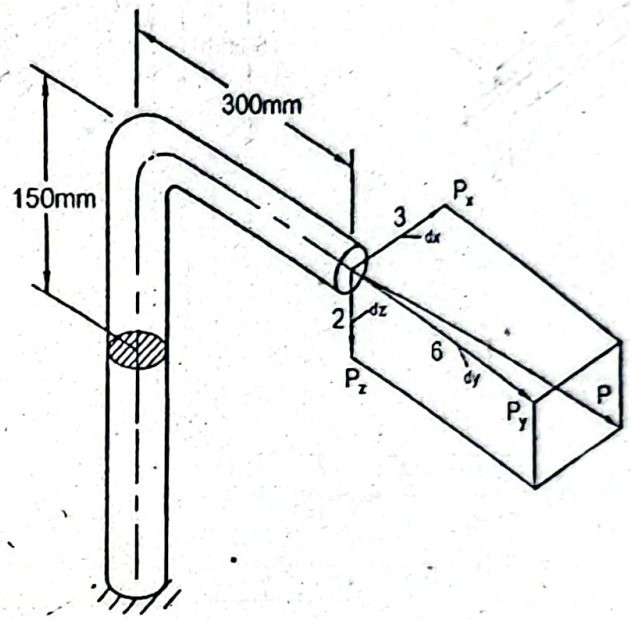

nal distance, $d = \sqrt{d_x^2 + d_y^2 + d_z^2}$

$= \sqrt{3^2 + 6^2 + 2^2} = 7$

components in the x, y and z directions,

$$P_x = \frac{3}{7}P = \frac{3}{7} \times 4900N = 2100N$$

$$P_y = \frac{6}{7}P = \frac{6}{7} \times 4900N = 4200N$$

$$P_z = \frac{2}{7}P = \frac{2}{7} \times 4900N = 1400N$$

lowing figure shows that the solid circular bracket is under the combined effect of
ding moment, torque and forces.

lt about x-axis, $M_x = P_z \times 300$

$= 1400 \times 300Nmm = 420000Nmm$

lt about z-axis, $M_z = P_x \times 300$

$= 2100 \times 300Nmm = 630000Nmm$

lt M_z will create torsional stress.

stress at the point A, $\sigma_A = -\frac{P_z}{A} + \frac{Mc}{I}$

$$= -\frac{1400}{\frac{\pi}{4}\times 40^2} + \frac{P_x \times 150 \times 20}{\frac{\pi}{64}\times 40^4}$$

$$= -\frac{1400\times 4}{\pi \times 40^2} + \frac{2100\times 150\times 20\times 64}{\pi \times 40^4}$$

$$= 49.02 MPa \text{ (Tensile) } Answer$$

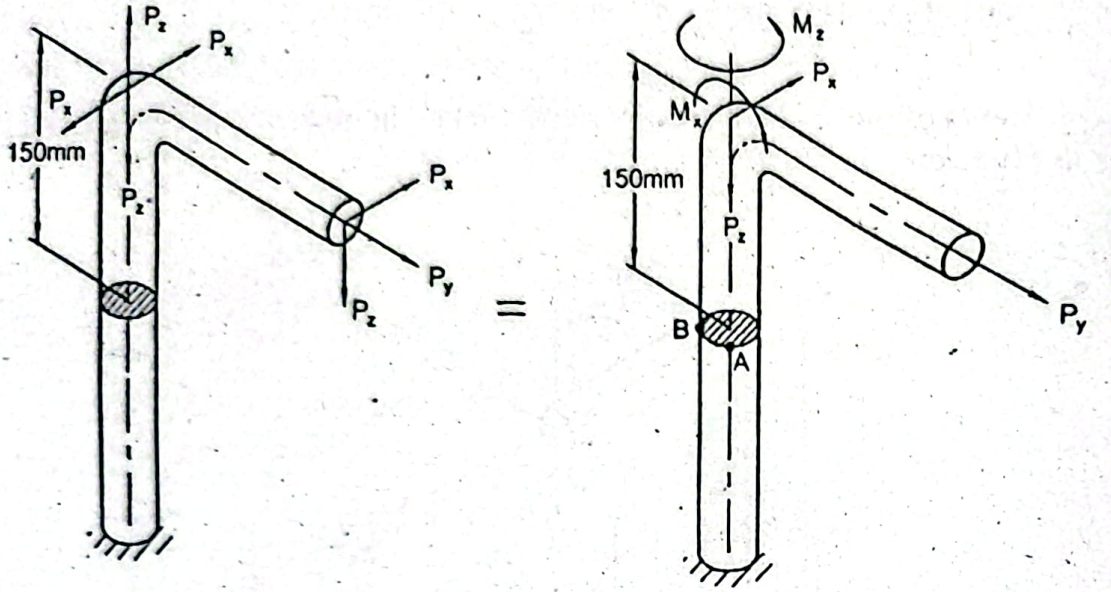

Normal stress at the point B, $\sigma_B = -\frac{P_z}{A} + \frac{M_x c}{I} + \frac{P_y \times 150 \times c}{I}$

$$= -\frac{1400\times 4}{\pi \times 40^2} + \frac{420000\times 20\times 64}{\pi \times 40^4} + \frac{4200\times 150\times 20\times c}{\pi \times 40^4}$$

$$= 166 MPa \text{ (Tensile) } Answer$$

Torsional shearing stress, $\tau_{t_A} = \tau_{t_B} = \frac{Tc}{J} = \frac{M_z c}{J} = \frac{630000\times 20\times 32}{\pi \times 40^4}$

$$= 50.13 MPa \text{ } Answer$$

Direct shear stress at the point A,

$$\tau_{d_A} = \frac{4P_y}{3A} = \frac{4\times 4200\times 4}{3\times \pi \times 40^2} MPa = 4.46 MPa$$

Direct shear stress at the point B,

$$\tau_{d_B} = \frac{4P_x}{3A} = \frac{4\times 2100\times 4}{3\times \pi \times 40^2} MPa = 2.23 MPa$$

Therefore, the maximum shearing stress at the point A,

$$\tau_A = \tau_{t_A} + \tau_{d_A} = (50.13 + 4.46) MPa = 54.59 MPa \text{ } Answe$$

and the maximum shearing stress at the point B,

$$\tau_B = \tau_{t_B} - \tau_{d_B} = (50.13 - 2.23) MPa = 47.90 MPa \text{ } Answe$$

Problem P10.11:

A hollow circular cantilever member is subjected to a load $P = 20kN$ as shown in Fig P10.11. If the outside diameter $d_o = 80mm$ and the inside diameter $d_i = 40m$ determine the normal stresses at the points A and B.

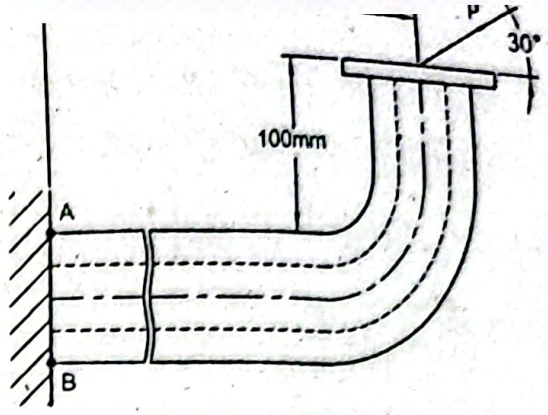

Figure P10.11

Given Data:

Outside diameter, $d_o = 80mm$

Inside diameter, $d_i = 40mm$

Load, $P = 20kN$

To Find:

- Normal stress at point A, σ_A
- Normal stress at point B, σ_B

Solution:

The hollow circular cantilever member is under the combined effect of the bending moment and force as shown below.

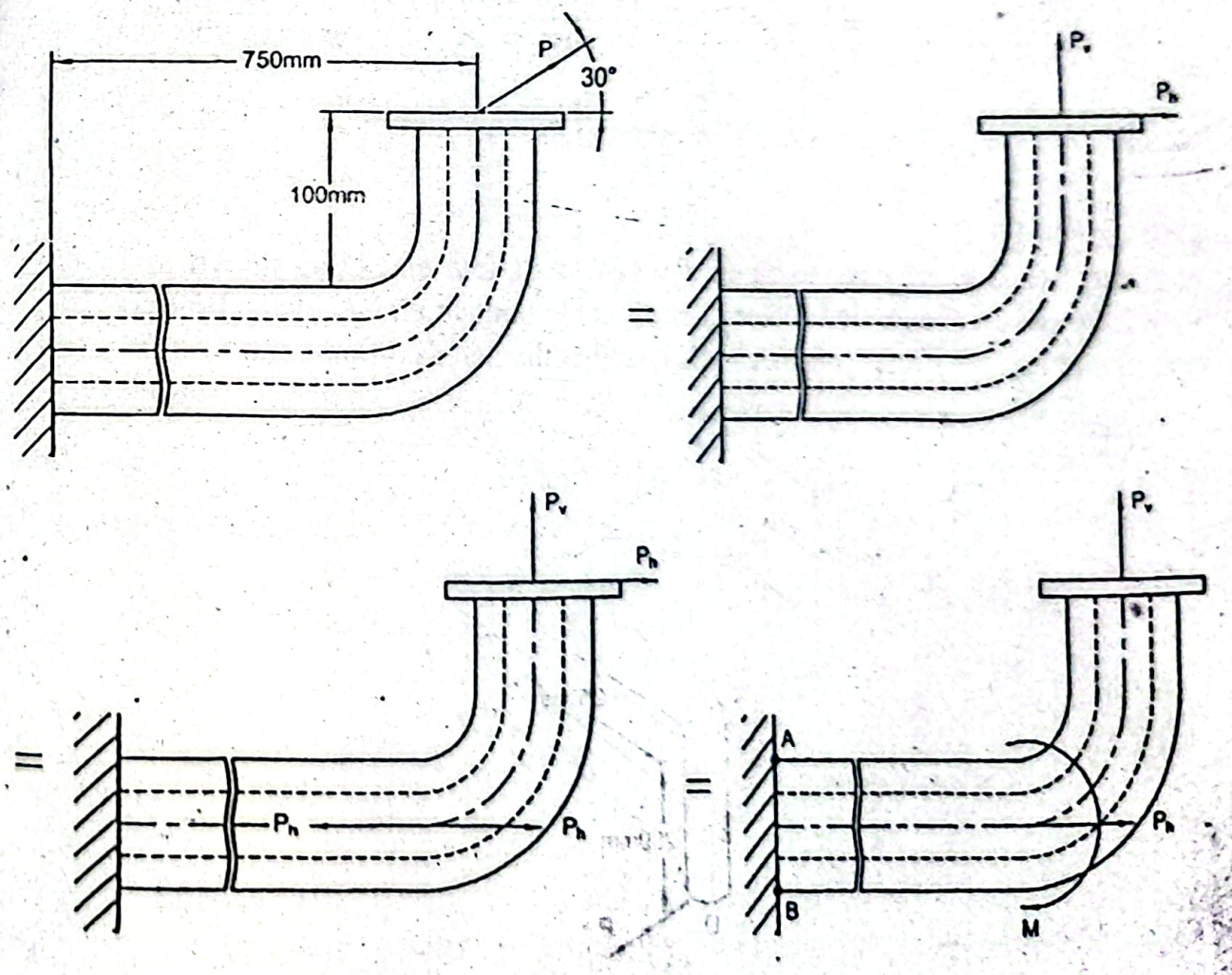

Vertical component, $P_v = P\sin 30^0 = 20\sin 30^0\ kN = 10kN$

Horizontal component, $P_h = P\cos 30^0 = 20\cos 30^0\ kN = 17.32kN$

Bending moment, $M = P_h \times \left(100 + \frac{d_o}{2}\right) = 17.32 \times \left(100 + \frac{80}{2}\right) Nm = 2424.8Nm$

Cross-sectional area, $A = \frac{\pi}{4}\left(d_o^2 - d_i^2\right) = \frac{\pi}{4}\left(80^2 - 40^2\right) mm^2 = 3769.91mm^2$

Moment of inertia, $\bar{I} = \frac{\pi}{64}\left(d_o^4 - d_i^4\right) mm^4 = 1884955.59mm^4$

Normal stress at the point A,

$$\sigma_A = \frac{P_h}{A} + \frac{Mc}{\bar{I}} - \frac{P_v \times 750 \times c}{\bar{I}}$$

$$= \frac{17.32 \times 10^3}{3769.91} + \frac{2424.8 \times 10^3 \times 40}{1884955.59} - \frac{10 \times 10^3 \times 750 \times 40}{1884955.59}$$

$$= -103.11 MPa$$

That is, $\sigma_A = 103.22MPa$ (Compressive) ***Answer***

Normal stress at the point B,

$$\sigma_B = \frac{P_h}{A} - \frac{Mc}{\bar{I}} + \frac{P_v \times 750 \times c}{\bar{I}}$$

$$= \frac{17.32 \times 10^3}{3769.91} - \frac{2424.8 \times 10^3 \times 40}{1884955.59} + \frac{10 \times 10^3 \times 750 \times 40}{1884955.59}$$

$$= -103.11 MPa$$

That is, $\sigma_A = 112.29MPa$ (Tensile) ***Answer***

Problem P10.12:

A bracket ABCD is subjected to a load $P = 4kN$ at its free end D as shown in Figure P10.12. Determine the maximum normai stress at the built-in end A of the bracket. The bracket is of uniform cross-section throughout and its diameter is $40mm$.

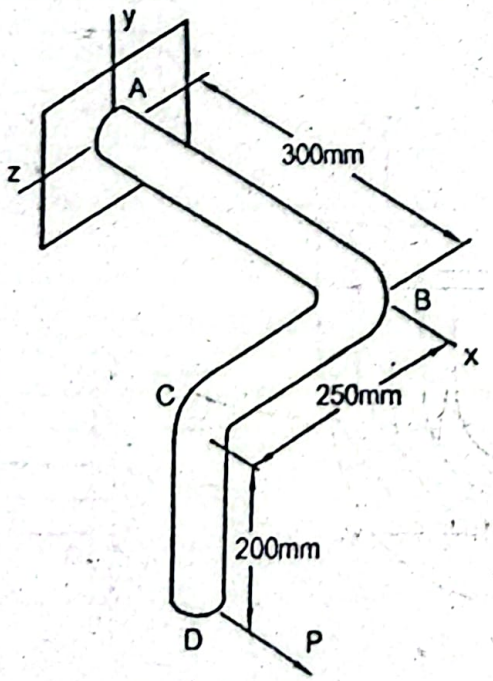

Figure P10.12

Diameter
Load, $P = 5kN$

To Find:

- Maximum normal stress at point A, σ_A

Solution:

The figure below shows that the bracket is under the combined effect of the bending moment and force.

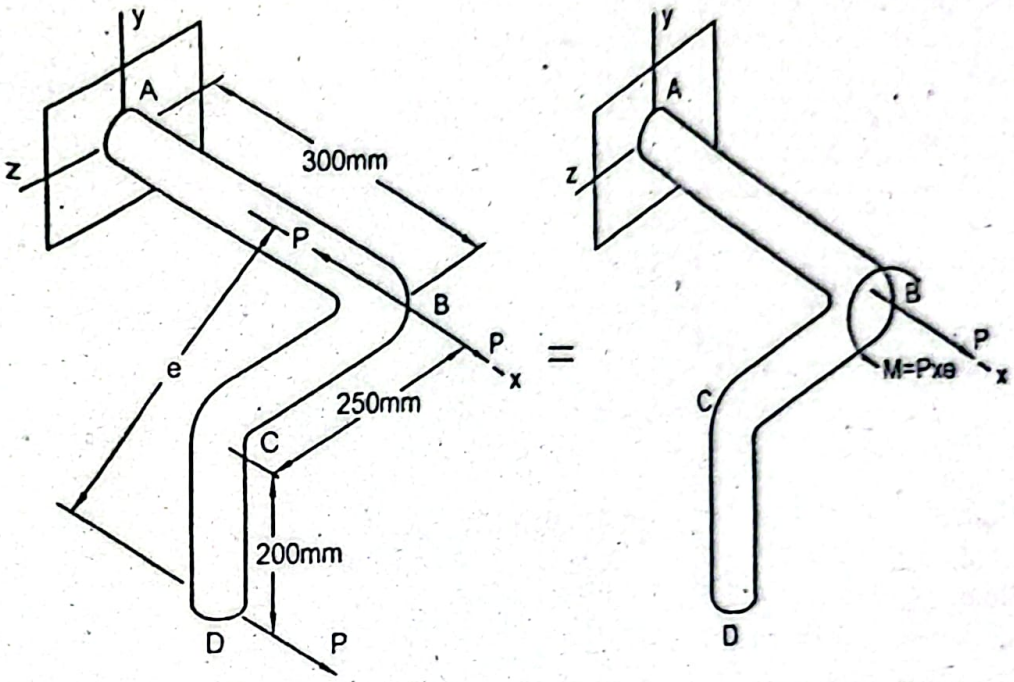

Distance e needed to find the bending moment is shown in the following figure.

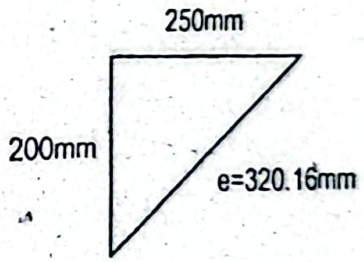

Let the distance between the line of action P and the axis of arm AB is e. Then,

Distance, $e = \sqrt{(250)^2 + (200)^2}\ mm = 320.16 mm$

Bending moment, $M = P \times e$

$= 5 \times 10^3 \times 320.16\ Nmm = 1600800\ Nmm$

Therefore, the maximum normal stress,

$$\sigma_A = \frac{P}{A} + \frac{Mc}{I} = \frac{4P}{\pi d^2} + \frac{Mc \times 64}{\pi d^4}$$

$$= \frac{4 \times 5 \times 10^3}{\pi \times 40^2} + \frac{1600800 \times 20 \times 64}{\pi \times 40^4}$$

$= 258.75MPa$ (Tensile) ***Answer***

Problem P10.13:

A cast iron post is subjected to a load $P = 20kN$ at the point C as shown in Figure P10.13. Determine the normal and shearing stresses at the points P and Q. The diameter of the post is $80mm$.

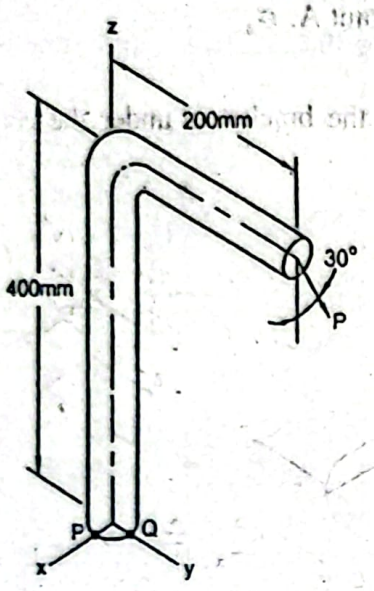

Figure P10.13

Given Data:

Diameter of post, $d = 80mm$

Load, $P = 20kN$

To Find:

- Normal and shearing stresses at point P, σ_P and τ_P
- Normal and shearing stresses at point Q, σ_Q and τ_Q

Solution:

The cast iron post is under the combined effect of the bending moment, torque and forces as shown in the figure below.

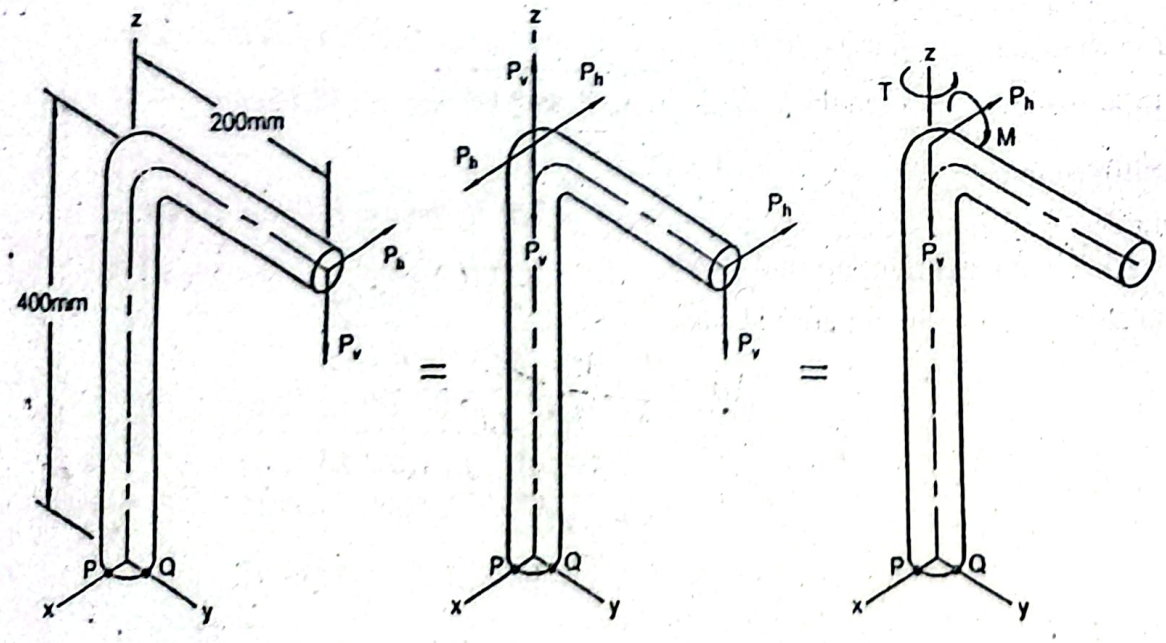

rizontal component, $P_h = P\sin 30^0 = 20\sin 30^0\ kN = 10kN$

rtical component, $P_v = P\cos 30^0 = 20\cos 30^0\ kN = 17.32kN$

ment, $M = P_v \times 200 = 17.32 \times 200Nm = 3464.10Nm$

rque, $T = P_h \times 200 = 10 \times 200Nm = 2000Nm$

mpressive stress at the points P and Q,

$$\sigma_C = \sigma_{CQ} = \frac{P_v}{A} = \frac{4P_v}{\pi d^2} = \frac{4\times 17.32\times 10^3}{\pi\times 80^2} MPa$$

$$= 3.45MPa$$

ending stress at the point P, $\sigma_{bP} = \frac{Mc}{I} = \frac{P_h \times 400 \times c \times 64}{\pi d^4}$

$$\text{or, } \sigma_{bP} = \frac{10\times 10^3 \times 400\times 40\times 64}{11\times 80^4} MPa = 79.58MPa$$

lending stress at the point Q, $\sigma_{bQ} = -\frac{Mc}{I} = -\frac{346410\times 10^3 \times 40\times 64}{\pi\times 80^4} MPa$

$$= -68.92MPa$$

Therefore, the normal stress at the point P,

$$\sigma_P = \sigma_{bP} - \sigma_C$$

$$= (79.58 - 3.45)MPa$$

$$= 76.13MPa \text{ (Tensile) } \textit{Answer}$$

Normal stress at the point Q, $\sigma_Q = \sigma_{bQ} - \sigma_C$

$$= (-68.92 - 3.45)MPa = -72.37MPa$$

That is, $\sigma_Q = 72.37MPa$ (Compressive) *Answer*

Torsional shearing stress at the points P and Q,

$$\tau_{tP} = \tau_{tQ} = \frac{Tc}{J} = \frac{2000\times 10^3 \times 40\times 32}{\pi\times 80^4}$$

$$= 19.89MPa$$

Direct shear stress at the point Q,

$$\tau_{dQ} = \frac{4P_h}{3A}$$

$$= \frac{4\times 10\times 10^3 \times 4}{3\times\pi\times 80^2}$$

$$= 2.65MPa$$

Therefore, the shearing stress at the point P,

$$\tau_P = \tau_{tP} = 19.89MPa \textit{ Answer}$$

Shearing stress at the point Q,

$$\tau_Q = \tau_{tQ} - \tau_{dQ}$$

$$= (19.89 - 2.65)MPa = 17.24MPa \textit{ Answer}$$

Problem P10.14:

A steel bracket supports a load $P = 1.6kN$ as shown in Figure P10.14. Determine the dimension t in the section a-a, if the allowable normal stress is $105MPa$.

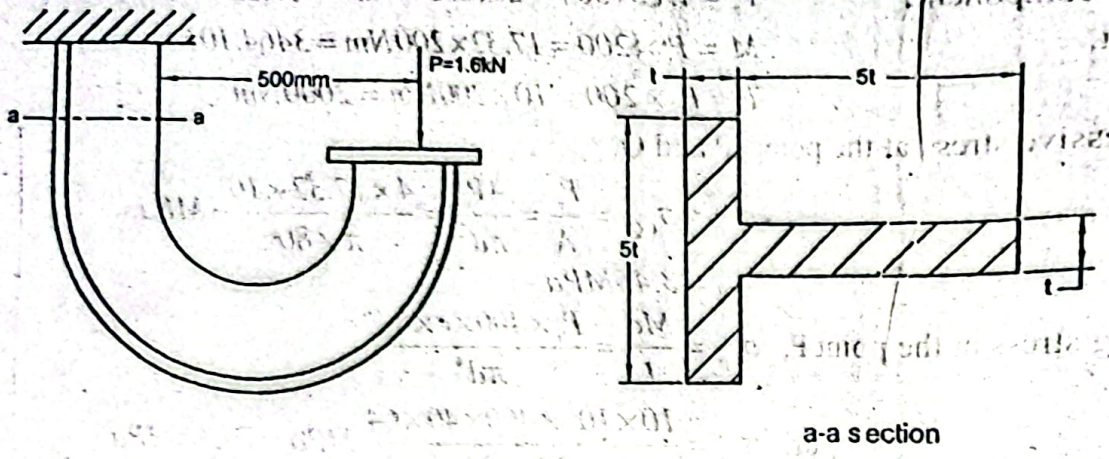

Figure P10.14

Given Data:

Load, $P = 1.6kN$

Allowable normal stress, $\sigma_a = 105MPa$

To Find:

- Dimension, t

Solution:

The following figure shows the location of the centroid in the cross-section of the steel bracket.

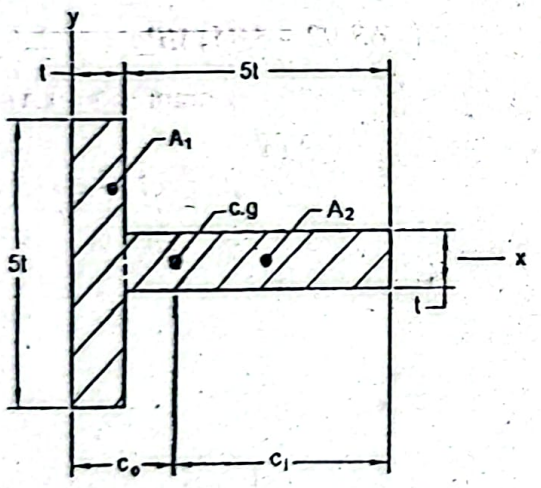

To find the centroid of area, $\bar{x}A = x_1A_1 + x_2A_2$

$$\text{or, } \bar{x}\left(5t^2 + 5t^2\right) = 0.5t \times 5t^2 + 3.5t \times 5t^2$$

$$\text{or, } \bar{x} = 2t \text{ that is, } c_o = 2t \text{ and } c_i = 4t$$

Centroidal moment of inertia,

$$\bar{I} = \left(I_1 + A_1d_1^2\right) + \left(I_2 + A_2d_2^2\right)$$

$$= \left[\frac{1}{12} \times 5t \times t^3 + 5t^2 \times \left(2t - 0.5t\right)^2\right] + \left[\frac{1}{12} \times t \times \left(5t\right)^3 + 5t^2 \times \left(4t - 2.5t\right)^2\right]$$

$$= 33.34t^4\ mm^4$$

ıe figure bel ow shows that the section a-a of the steel bracket is under the combined ıion of the b ending moment and force.

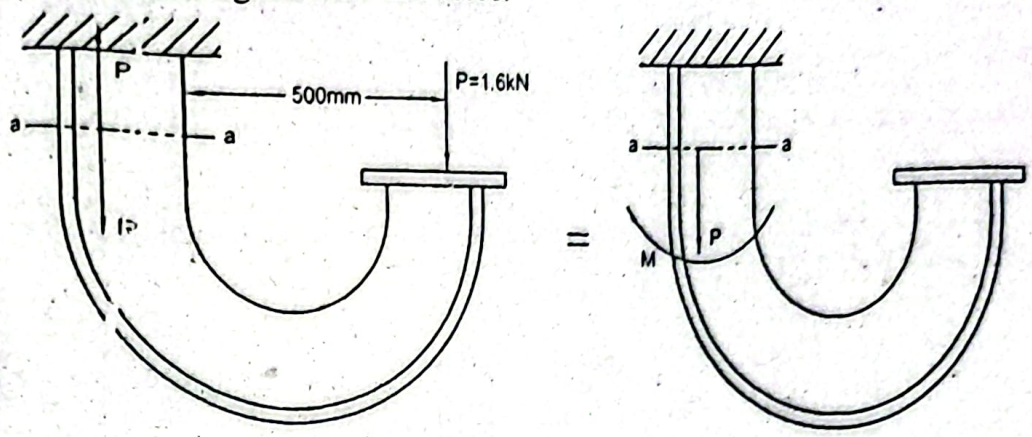

nding moment, $M = P \times (500 + 4t)$

rmal st ess at the inner fiber, $\sigma_{in} = \sigma_i + \frac{P}{A}$

or, $\sigma_a = \frac{Mc_i}{I} + \frac{P}{A}$

or, $105 = \frac{P(500+4t)\times 4t}{33.34t^4} + \frac{1.6\times 10^3}{10t^2}$

or, $t = 10mm$

ɔrmal stress at the outer fiber, $\sigma_{out} = -\sigma_a + \frac{P}{A}$

or, $\sigma_a = -\frac{Mc_o}{I} + \frac{P}{A}$

or, $-105 = -\frac{1.6\times 10^3 \times (500+4t)\times 2t}{33.34t^4} + \frac{1.6\times 10^3}{10t^2}$

or, $t = 7.8mm$

ere fore, the required dimension, $t = 10mm$ ***Answer***

oblem P10.15:

hand press of cast steel frame has cross-section a-a as shown in Figure P10.15. termine the normal stresses at the inner and outer fibers, if the load $P = 5kN$.

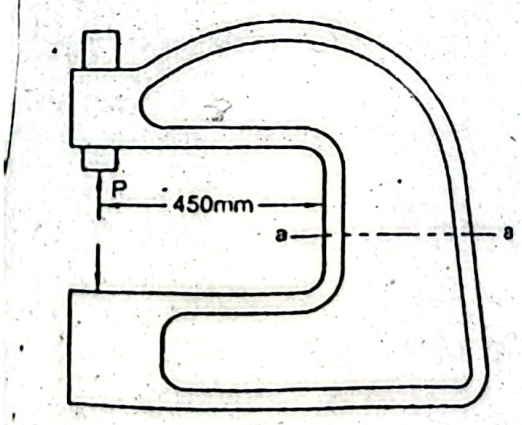

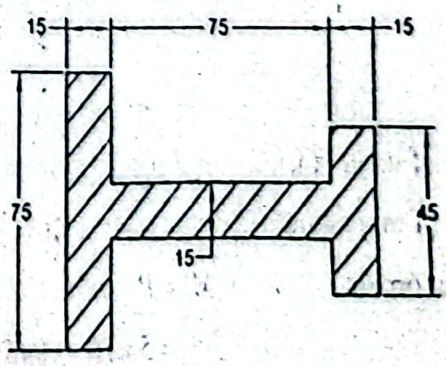

(all dimensions are in mm)

a-a section

Figure P10.15

Given Data:

Load, $P = 5kN$

To Find:

- Normal stress at inner fiber, σ_i
- Normal stress at outer fiber, σ_o

Solution:

The following figure shows the location of the centroid in the cross-section of the cast steel frame of the hand press.

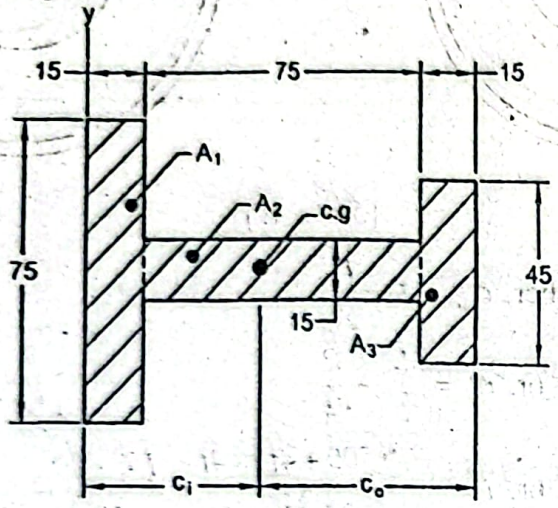

(all dimensions are in mm)

Cross-sectional area, $A = A_1 + A_2 + A_3$

$= (75\times15 + 75\times15 + 45\times15)mm^2 = 2925mm^2$

Let $\bar{x}$ is the location of the centroid, then,

$\bar{x}A = \bar{x}_1A_1 + \bar{x}_2A_2 + \bar{x}_3A_3$

or, $\bar{x}\times2925 = 7.5\times75\times15 + 52.5\times75\times15 + 97.5\times45\times15$

or, $\bar{x} = 45.58mm$

Centroidal moment of inertia,

$$\bar{I} = \left(\bar{I}_1 + Ad_1^2\right) + \left(\bar{I}_2 + Ad_2^2\right) + \left(\bar{I}_3 + Ad_3^2\right)$$

$$= \left[\frac{1}{12}\times75\times15^3 + 75\times15\times(45.58-7.5)^2\right] + \left[\frac{1}{12}\times15\times75^3 + 75\times15\times(52.5-45.58)^2\right] + \left[\frac{1}{12}\times45\times15^3 + (97.5-45.8)^2\right]$$

$= 4065901.47mm^4$

Distance of inner fiber, $c_i = \bar{x} = 45.58mm$

Distance of outer fiber, $c_o = (105-45.58)mm = 59.42mm$

Bending moment, $M = P\times(450+c_i)$

$= 5\times10^3\times(450+45.58)Nmm$

$= 2477900Nmm$

Therefore, the normal stress at the inner fiber,

$$= \frac{2477900 \times 45.58}{4065901.47} + \frac{5000}{2925}$$

$$= 29.49MPa \text{ (Tensile) } \textit{Answer}$$

d the normal stress at the outer fiber,

$$\sigma_{a} = -\frac{Mc_{a}}{\bar{I}} + \frac{P}{A}$$

$$= -\frac{2477900 \times 59.42}{4065901.47} + \frac{5000}{2925}$$

$$= -34.50MPa$$

at is, $\sigma_{a} = 34.50MPa$ (Compressive) *Answer*

roblem P10.16:

C-frame used for a hand screw press is subjected to a load P as shown in Figure 0.16. If the allowable normal stress is $125MPa$, determine the maximum load P that n be applied based on the section a-a.

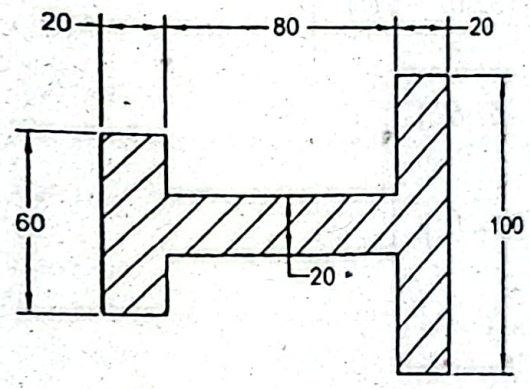

(all dimensions are in mm)

a-a section

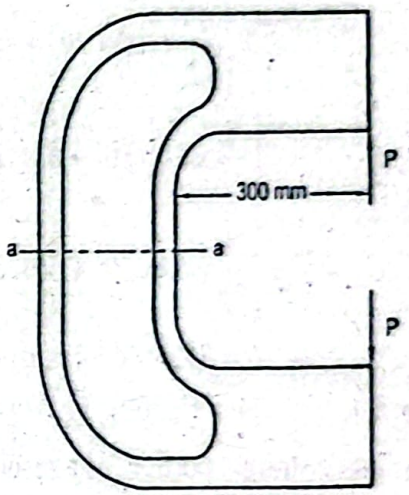

Figure P10.16

iven Data:

llowable normal stress, $\sigma_{a} = 125MPa$

o Find:

Maximum load, P

olution:

he location of the centroid in the cross-section of the C-frame is shown in the following gure.

rea of cross-section, $A = (100 \times 20 + 80 \times 20 + 60 \times 20)mm^2 = 4800mm^2$

o find the centroid of the area,

$$\bar{x} \times A = A_1 x_1 + A_2 x_2 + A_3 x_3$$

or, $\bar{x} \times 4800 = 100 \times 20 \times 10 + 80 \times 20 \times 60 + 60 \times 20 \times 110$

or, $\bar{x} = 51.67mm$

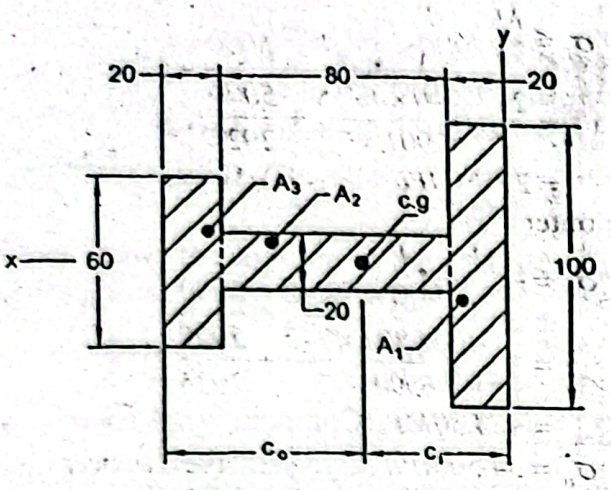

(all dimensions are in mm)

Moment of inertia, $\bar{I} = \left(\bar{I}_1 + A_1 d_1^2\right) + \left(\bar{I}_2 + A_2 d_2^2\right) + \left(\bar{I}_3 + A_3 d_3^2\right)$

$$\bar{I} = \left[\frac{1}{12} \times 100 \times 20^3 + 100 \times 20 \times (51.67 - 10)^2\right]$$

$$+ \left[\frac{1}{12} \times 20 \times 80^3 + 80 \times 20 \times (60 - 51.67)^2\right]$$

$$+ \left[\frac{1}{12} \times 60 \times 20^3 + 60 \times 20 \times (68.33 - 10)^2\right]$$

or, $\bar{I} = 8626666.72 mm^4$

Bending moment, $M = P(300 + 51.67) = 351.67P$

Section *a-a* is in the straight portion, as a result there is no curvature effect. Therefore, the normal stress at the inner fiber,

$$\sigma_{in} = \frac{Mc_i}{\bar{I}} + \frac{P}{A}$$

or, $\sigma_a = \frac{Mc_i}{\bar{I}} + \frac{P}{A}$

or, $125 = \frac{351.67P \times 51.67}{8626666.72} + \frac{P}{4800}$

or, $P = 54.00kN$

and the normal stress at the outer fiber,

$$\sigma_{out} = -\frac{Mc_o}{\bar{I}} + \frac{P}{A}$$

or, $\sigma_a = -125 = -\frac{351.67P \times 68.33}{8626666.72} + \frac{P}{4800}$

or, $P = 48.50kN$

Therefore, the required maximum load, $p = 48.50kN$ *Answer*

Problem P10.17:

A curved member of rectangular section as shown in Figure P10.17 is subjected to a load $P = 30kN$. Determine the normal stresses at the inner and outer fibers along the section shown.

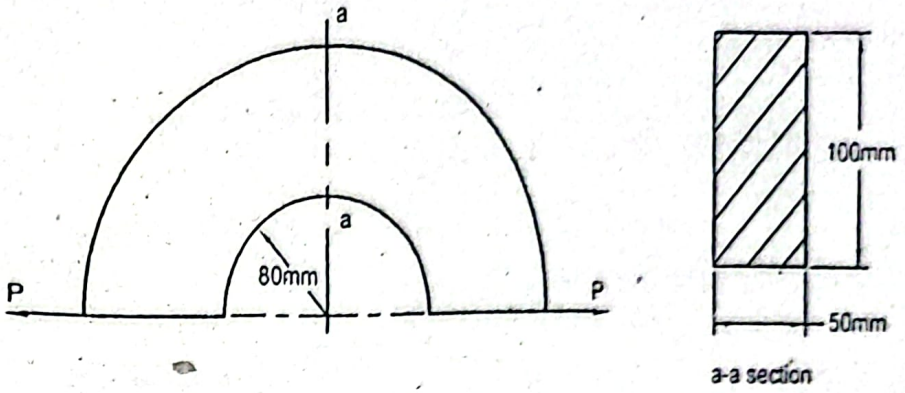

Figure P10.17

Given Data:

Inner radius, $r_i = 80mm$

$h = 100mm$

$b = 50mm$

Load, $P = 30kN$

To Find:

- Normal stress at inner fiber, σ_{in}
- Normal stress at outer fiber, σ_{out}

Solution:

The cross-section of the curved member shows the locations of the neutral axis and centroidal axis in the figure below.

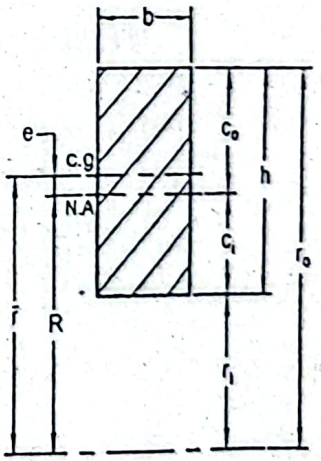

Radius of the outer fiber, $r_o = r_i + h = (80 + 100)mm = 180mm$

Radius of the centroidal axis, $\bar{r} = r_i + h/2 = (80 + 100/2)mm = 130mm$

Radius of the neutral axis, $R = \frac{h}{\ln\left(\frac{r_o}{r_i}\right)} = \frac{100}{\ln\left(\frac{180}{80}\right)} = 123.32mm$

Eccentricity, $e = \bar{r} - R$

$= (130 - 123.32)mm = 6.685mm$

Distance of the inner fiber from the neutral axis,

$$c_i = \frac{h}{2} - e = \left(\frac{100}{2} - 6.685\right)mm = 43.32mm$$

Distance of the outer fiber from the neutral axis,

$$c_o = \frac{h}{2} + e = \left(\frac{100}{2} + 6.685\right)mm = 56.69mm$$

Bending moment, $M = P \times \bar{r}$

$= (30 \times 130)Nm = 3900Nm$

Cross-sectional area, $A = h \times b = 100 \times 50 = 5000mm^2$

Bending stress at the inner fiber,

$$\sigma_i = \frac{Mc_i}{Aer_i}$$

$$= -\frac{3900 \times 10^3 \times 13.32}{5000 \times 6.685 \times 80}MPa$$

$$= 63.18MPa$$

and the bending stress at the inner fiber,

$$\sigma_o = -\frac{Mc_o}{Aer_o}$$

$$= -\frac{3900 \times 10^3 \times 56.69}{5000 \times 6.685 \times 180}MPa$$

$$= -36.74MPa$$

Therefore, the normal stress at the inner fiber,

$$\sigma_{in} = \sigma_i + \frac{P}{A}$$

$$= \left(63.18 + \frac{30 \times 10^3}{5000}\right)MPa$$

$$= 69.18MPa \text{ (Tensile) } \textit{Answer}$$

and the normal stress at the outer fiber,

$$\sigma_{out} = \sigma_o + \frac{P}{A}$$

$$= -36.74 + \frac{30 \times 10^3}{5000}$$

$$= -30.74MPa$$

That is, $\sigma_{out} = 30.74MPa$ (Compressive) *Answer*

Problem P10.18:

A crane hook of rectangular cross-section supports a load $P = 40kN$ as shown in Figure P10.18. Determine the normal stresses at the points A and B.

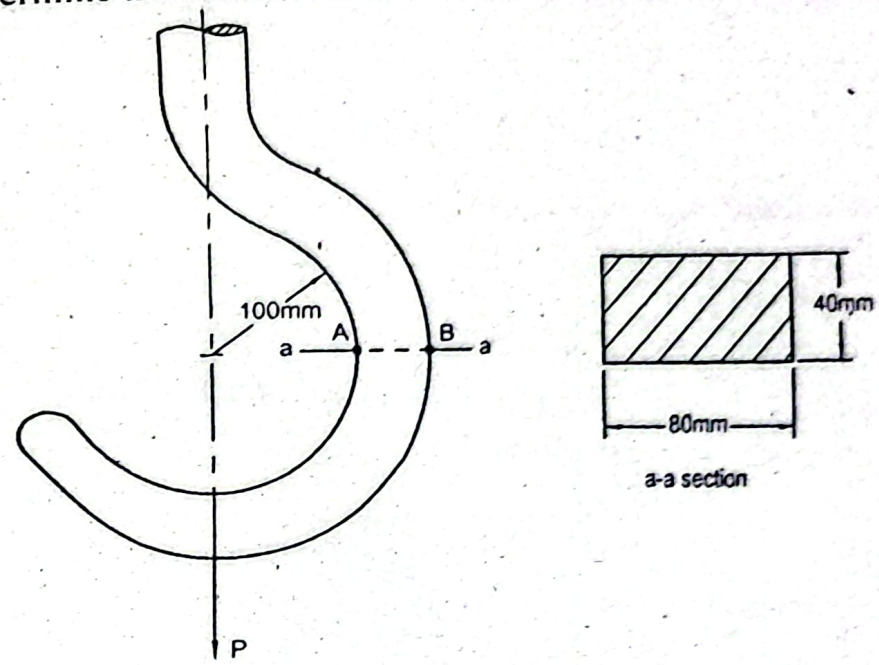

Figure P10.18

Given Data:

Load, $P = 30kN$

To Find:

- Normal stress at point A, σ_A
- Normal stress at point B, σ_B

Solution:

The cross-section of the crane hook shows the locations of the neutral axis and centroidal axis in the figure below.

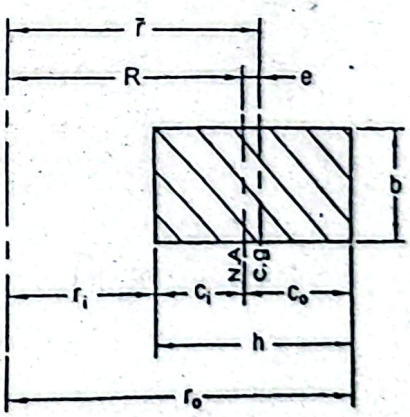

Various distances, $b = 40mm$

$h = 80mm$

$r_i = 100mm$

$r_o = (r_i + h)$

$$= (100+80)mm = 180mm$$

Cross-sectional area, $A = b \times h = 40 \times 80mm^2 = 3200mm^2$

Radius of the centroidal axis from the center of curvature,

$$\bar{r} = r_i + \frac{h}{2}$$

$$= \left(100 + \frac{80}{2}\right)mm = 140mm$$

Radius of the neutral axis from the center of curvature,

$$R = \frac{h}{ln\left(\frac{r_o}{r_i}\right)} = \frac{80}{ln\left(\frac{180}{100}\right)} = 136.10mm$$

Eccentricity, $e = (\bar{r} - R) = (140 - 136.10)mm = 3.90mm$

Distance of the inner fiber from the neutral axis,

$$c_i = (R - r_i)$$

$$= (136.10 - 100)mm = 36.10mm$$

Distance of the outer fiber from the neutral axis,

$$c_o = (h - c_i)$$

$$= (80 - 36.10)mm = 43.9mm$$

Bending moment, $M = P\bar{r} = 40 \times 10^3 \times 140Nmm = 56 \times 10^5 Nmm$

Normal stress at the point A of the inner fiber,

$$\sigma_A = \frac{Mc_i}{Aer_i} + \frac{P}{A}$$

$$= \frac{56 \times 10^5 \times 36.10}{3200 \times 3.90 \times 100} + \frac{40 \times 10^3}{3200}$$

$$= 174.49MPa \text{ (Tensile) } \textit{Answer}$$

Normal stress at the point B of the outer fiber,

$$\sigma_B = -\frac{Mc_o}{Aer_o} + \frac{P}{A}$$

$$\text{or, } \sigma_B = -\frac{56 \times 10^5 \times 43.9}{3200 \times 390 \times 180} + \frac{40 \times 10^3}{3200}$$

$$= -96.94MPa$$

That is, $\sigma_B = 96.94MPa$ (Compressive) ***Answer***

Problem P10.19:

A crane hook of trapezoidal cross-section supports a load P as shown in Figure P10.19. If the allowable stress in either tension or compression is $120MPa$, determine the maximum load P that can be supported.

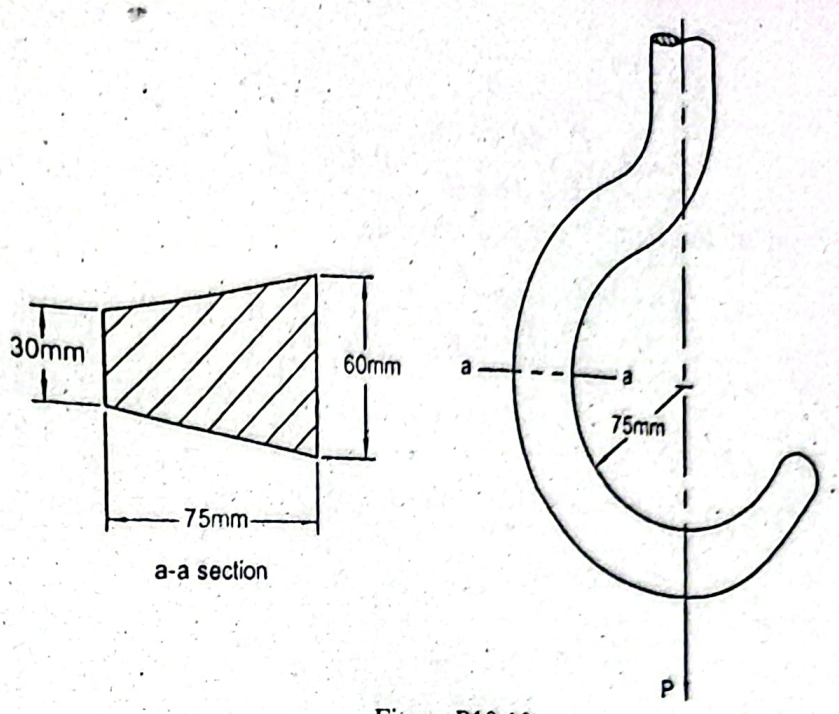

Figure P10.19

iven Data:

$= 60mm$

$= 30mm$

$= 75mm$

$= 75mm$

llowable stress, $\sigma_a = 120MPa$

o Find:

Maximum load, P

olution:

he following figure shows the locations of the neutral and centroidal axes in the cross-ection of the crane hook.

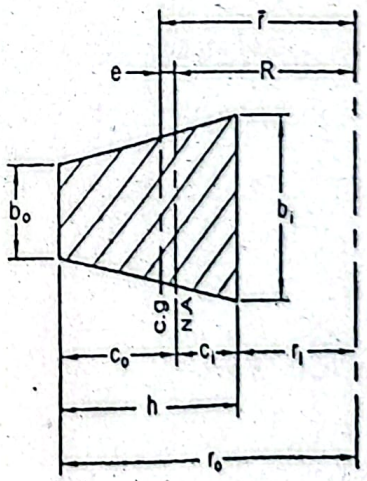

Cross-sectional area, $A = \frac{b_i + b_o}{2} \times h = \frac{60+30}{2} \times 75mm^2 = 3375mm^2$

Radius of the centroidal axis from the center of curvature,

$$\bar{r} = r_i + \frac{h}{3} \times \frac{b_i + 2b_o}{b_i + b_o}$$

$$= 75 + \frac{75}{3} \times \frac{60 + 2\times 30}{60 + 30} = 108.33mm$$

Radius of the neutral axis from the center of curvature,

$$R = \frac{A}{b_o - b_i + \left[(b_i r_o - b_o r_i)/h\right] ln\left(\frac{r_o}{r_i}\right)}$$

$$= \frac{3375}{30 - 60 + \left[(60\times 150 - 31\times 75)/75\right] ln\left(\frac{150}{75}\right)}$$

$$= 104.22mm$$

Therefore, eccentricity, $e = \bar{r} - R$

$$= (108.33 - 104.22)mm = 4.109mm$$

Distance of the inner fiber from the neutral axis,

$$c_i = (R - r_i) = (104.22 - 75)mm = 29.22mm$$

Distance of the outer fiber from the neutral axis,

$$c_o = (h - c_i) = (75 - 29.22)mm = 45.78mm$$

Bending moment, $M = P \times \bar{r} = 108.33P$

Normal stress at the inner fiber,

$$\sigma_A = \sigma_i + \frac{P}{A} \qquad (i)$$

We have the bending stress at the inner fiber,

$$\sigma_i = \frac{Mc_i}{Aer_i}$$

$$\sigma_i = \frac{108.33P \times 29.22}{3375 \times 4.109 \times 75} = 3.0434 \times 10^{-3} P$$

Substituting this value in Equation (i) and writing, $\sigma_A = \sigma_a = 120MPa$

$$120 = 3.0434 \times 10^{-3} P + \frac{P}{3375}$$

or, $P = 35.93kN$

Normal stress at the outer fiber,

$$\sigma_B = \sigma_o + \frac{P}{A} \qquad (ii)$$

But we have the bending stress at the outer fiber,

$$\sigma_o = -\frac{Mc_o}{Aer_o}$$

$$= -\frac{108.33P \times 45.78}{3375 \times 4.109 \times 150}$$

$$= -2.384 \times 10^{-3} P$$

Substituting this value in Equation(*ii*) and writing, $\sigma_B = \sigma_n = -120MPa$ and

$$-120 = -2.384 \times 10^{-3} P + \frac{P}{3375}$$

or, $P = 57.48kN$

Therefore, the required maximum load, $P = 35.93kN$ *Answer*

Problem P10.20:

The split ring as shown in Figure P10.20 has circular cross-section of *30mm* diameter. knowing that each of *2.5kN* loads is applied at the centroid of the cross-section. determine the stresses at the points A and B.

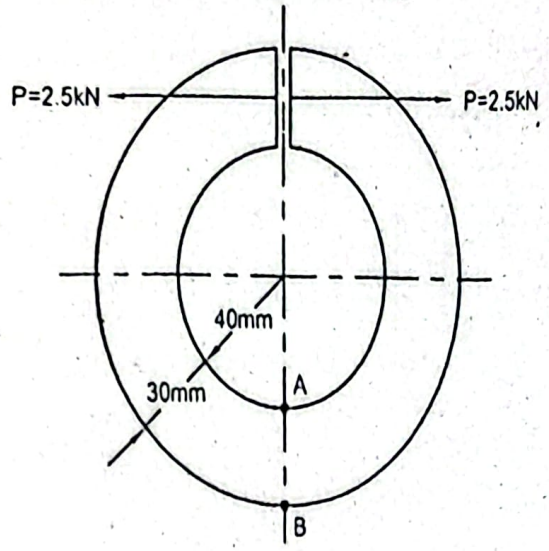

Figure P10.20

Given Data:

Diameter, $d = 30mm$

Load at centroid, $P = 2.5kN$

To Find:

- Stress at point A, σ_A
- Stress at point B, σ_B

Solution:

The locations of the neutral and centroidal axes in the cross-section of the split ring are shown in the figure below.

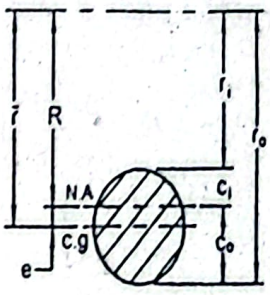

Radius of the inner fiber, $r_i = 40mm$

Radius of the outer fiber, $r_o = (40 + 30)mm = 70mm$

Radius of the centroidal axis, $\bar{r} = \left(40 + \frac{30}{2}\right) mm = 55mm$

Radius of the neutral axis, $R = \frac{d^2}{4\left(2\bar{r} - \sqrt{4\bar{r}^2 - d^2}\right)}$

$$= \frac{30^2}{4\left(2\times 55 - \sqrt{4\times 55^2 - 30^2}\right)} = 53.96mm$$

Therefore, eccentricity, $e = \bar{r} - R = (55 - 53.96)mm = 1.04mm$

Bending moment M is taken with respect to the centroid, therefore,

$$M = 2.5\times\left(40\times 2 + \frac{30}{2}\times 2\right) Nm = 275Nm$$

Cross-sectional area, $A = \frac{\pi d^2}{4} = \frac{\pi\times 30^2}{4} mm^2 = 706.86mm^2$

Distance of the inner fiber, $c_i = (15 - 1.04)mm = 13.96mm$

Distance of the outer fiber, $c_o = (15 + 1.04)mm = 16.04mm$

Bending stress at the inner fiber, $\sigma_i = \frac{Mc_i}{Aer_i} = \frac{275\times 10^3 \times 13.96}{706.86\times 1.04\times 40} MPa$

$$= 130.55MPa$$

Bending stress at the outer fiber, $\sigma_o = -\frac{Mc_o}{Aer_o} = -\frac{275\times 10^3 \times 16.04}{706.86\times 1.04\times 70} MPa$

$$= -85.72MPa$$

Therefore, the normal stress at the point A,

$$\sigma_A = \sigma_i + \frac{P}{A}$$

$$= \left(130.55 + \frac{2.5\times 10^3}{706.86}\right) MPa$$

$$= 134.09MPa \text{ (Tensile) } Answer$$

and the normal stress at the point B,

$$\sigma_B = -\sigma_o + \frac{P}{A}$$

$$= \left(-85.72 + \frac{2.5\times 10^3}{706.86}\right) MPa$$

$$= -82.18MPa$$

That is, $\sigma_B = 82.18MPa$ (Compressive) $Answer$

Problem P10.21:

A *C*-frame is subjected to a load $P = 2.5kN$ as shown in Figure P10.21. Determine the normal stresses at the inner and outer fibers along the section a-a.

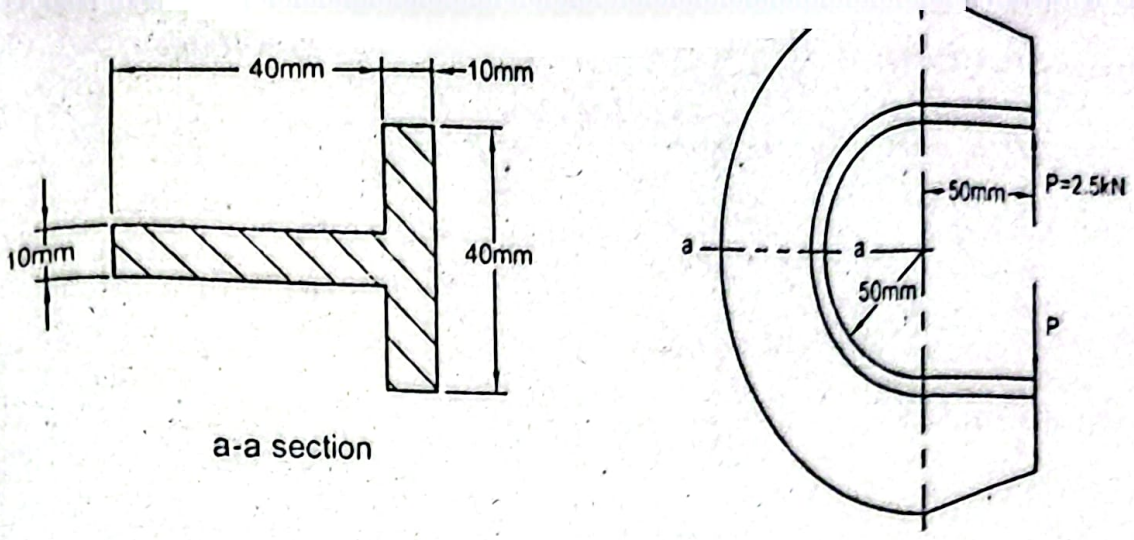

Figure P10.21

Given Data:

Load, $P = 2.5kN$

To Find:

Normal stress at inner fiber, σ_{in}

Normal stress at outer fiber, σ_{out}

Solution:

The figure below shows the locations of the neutral and centroidal axes in the cross-section of the C-frame.

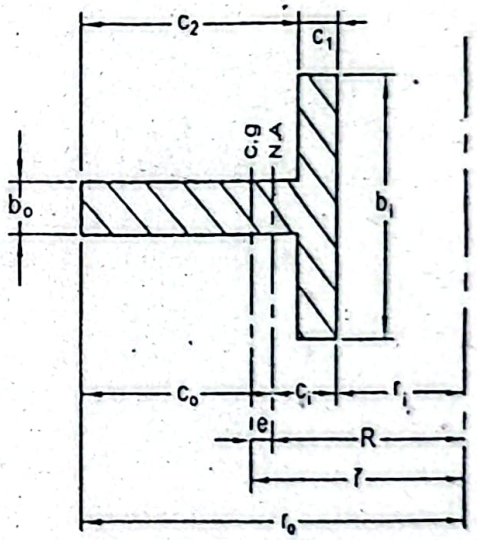

Cross-sectional area, $A = (40\times 10 + 40\times 10)mm^2 = 800mm^2$

Various dimensions, $b_i = 40mm$

$b_o = 10mm$

$c_1 = 10mm$

$c_2 = 40mm$

Radius of the inner fiber, $r_i = 50mm$

Radius of the outer fiber, $r_o = (r_i + c_1 + c_2) = (50 + 10 + 10)\,mm = 100mm$

Radius of the centroidal axis, $\bar{r} = r_i + \dfrac{b_i c_1^2 + 2b_o c_1 c_2 + b_o c_2^2}{2(b_o c_2 + b_i c_1)}$

$$= 50 + \frac{40\times10^2 + 2\times10\times10\times40 + 10\times40^2}{2(10\times40 + 40\times10)}$$

$$= 67.5mm$$

Radius of the neutral axis, $R = \dfrac{b_i c_1 + b_o c_2}{b_i \ln[(r_i + c_1)/r_i] + b_o \ln[r_o/(r_i + c_1)]}$

$$= \frac{40\times10 + 10\times40}{40\ln[(50+10)/50 + 10\ln[100/(50+10)]]}$$

$$= 64.5mm$$

Therefore, eccentricity, $e = (\bar{r} - R) = (67.5 - 64.5)\,mm = 3mm$

Distance of the inner fiber, $c_i = R - r_i = (64.5 - 50)\,mm = 14.5mm$

Distance of the outer fiber, $c_o = 50 - c_i = (50 - 14.5)\,mm = 35.5mm$

Bending moment, $M = P\times(\bar{r} + 50)$

$$= 2.5\times10^3\times(67.5+50)\,Nmm$$

$$= 293750Nmm$$

Normal stress at the inner fiber, $\sigma_{in} = \dfrac{P}{A} + \sigma_i$

$$= \frac{P}{A} + \frac{Mc_i}{Aer_i}$$

$$= \frac{2500}{800} + \frac{293750\times14.5}{800\times3\times50}$$

$$= 38.62MPa \text{ (Tensile) } \textit{Answer}$$

Normal stress at the outer fiber, $\sigma_{out} = \dfrac{P}{A} - \sigma_o$

$$= \frac{P}{A} - \frac{Mc_o}{Aer_o}$$

$$= \frac{2500}{800} - \frac{293750\times35.5}{800\times3\times100}$$

$$= -40.33MPa$$

That is, $\sigma_{out} = 40.33MPa$ (Compressive) ***Answer***

Problem P10.22:

A split ring of trapezoidal cross-section supports a load P as shown in Figure P10.22. If the allowable normal stress is $130MPa$, determine the maximum load P that can be supported.

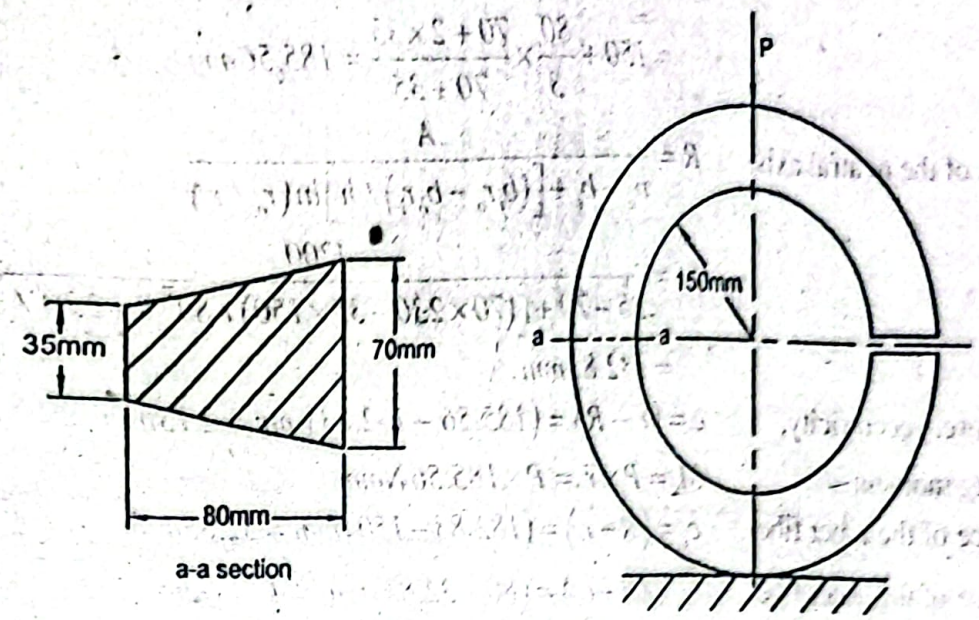

Figure P10.22

iven Data:

llowable normal stress, $\sigma_a = 130MPa$

) Find:

Maximum load, P

olution:

ıe figure below shows the locations of the neutral and centroidal axes in the cross-ction of the split ring.

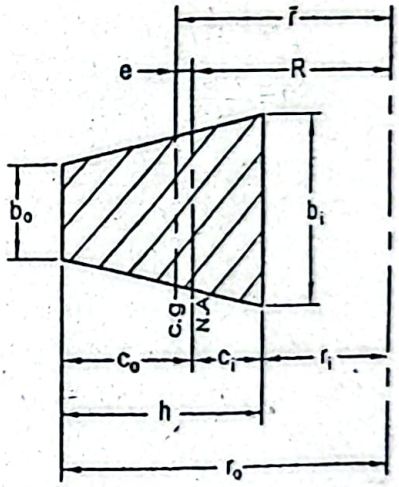

arious dimensions, $b_i = 70mm$

$b_o = 35mm$

$h = 80mm$

adius of the inner fiber, $r_i = 150mm$

adius of the outer fiber, $r_o = (r_i + h) = (150 + 80)mm = 230mm$

ross-sectional area, $A = \frac{1}{2}h(b_i + b_o) = \frac{80}{2}(70 + 35)mm^2 = 4200mm^2$

adius of the centroidal axis, $\bar{r} = r_i + \frac{h}{3} \times \frac{b_i + 2b_o}{b_i + b_o}$

$$= 150 + \frac{80}{3} \times \frac{70 + 2 \times 35}{70 + 35} = 185.56 mm$$

Radius of the neutral axis, $$R = \frac{A}{b_o - b_i + \left[(b_i r_o - b_o r_i)/h \right] \ln(r_o / r_i)}$$

$$= \frac{4200}{35 - 70 + \left[(70 \times 230 - 35 \times 150)/80 \right] \ln(230/150)}$$

$$= 182.83 mm$$

Therefore, eccentricity, $e = (\bar{r} - R) = (185.56 - 182.83) mm = 2.73 mm$

Bending moment, $M = P \times \bar{r} = P \times 185.56 Nmm$

Distance of the inner fiber, $c_i = (R - r_i) = (182.83 - 150) mm = 32.83 mm$

Distance of the outer fiber, $c_o = (h - c_i) = (80 - 32.83) mm = 47.17 mm$

Considering the normal stress at the inner fiber,

$$\sigma_{in} = -\frac{Mc_i}{Aer_i} - \frac{P}{A}$$

$$\text{or, } \sigma_a = -130 = -\frac{185.56P \times 32.83}{4200 \times 2.73 \times 150} - \frac{P}{4200}$$

$$\text{or, } P = 34.39 kN$$

Now considering the normal stress at the outer fiber,

$$\sigma_{out} = \frac{Mc_o}{Aer_o} - \frac{P}{A}$$

$$\text{or, } \sigma_a = 130 = \frac{185.56P \times 47.17}{4200 \times 2.73 \times 230} - \frac{P}{4200}$$

$$\text{or, } P = 42.20 kN$$

Therefore, the required load, $P = 34.39 kN$ *Answer*

Problem P10.23:

A C-frame is subjected to a load P as shown in Figure P10.23. Determine the maximum load P that can be applied if the allowable normal stress is $150 MPa$.

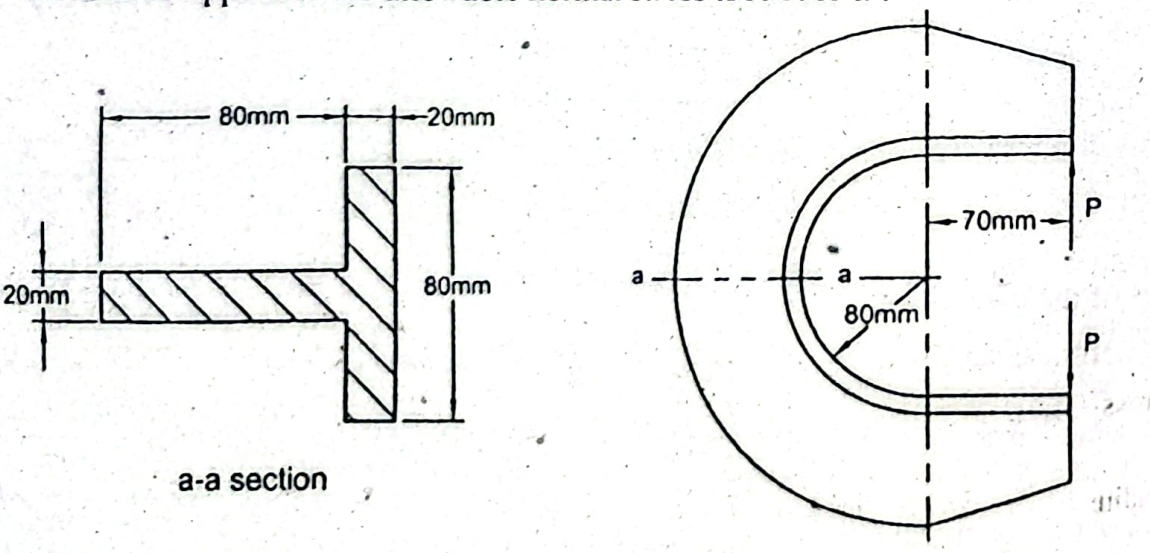

Figure P10.23

iven Data:

llowable normal stress, $\sigma_a = 150MPa$

o Find:

Maximum load, P

lution:

ie figure below shows the locations of the neutral and centroidal axes in the cross-tion of the C-frame.

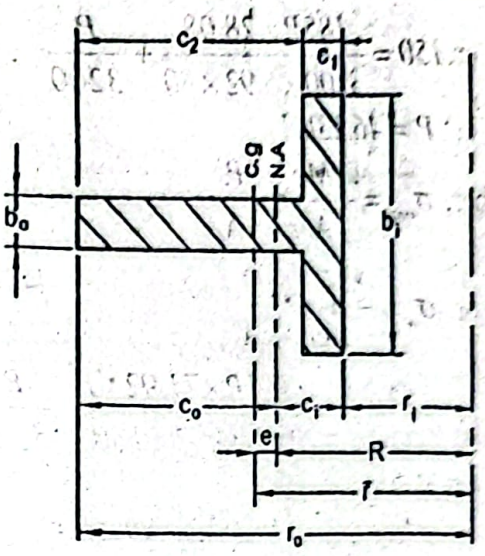

ious dimensions, $b_i = 80mm$

$b_o = 20mm$

$c_1 = 20mm$

$c_2 = 80mm$

ius of the inner fiber, $r_i = 80mm$

us of the outer fiber, $r_o = (r_i + c_1 + c_2) = (80+20+80)mm = 180mm$

us of the centroidal axis, $\bar{r} = r_i + \dfrac{b_i c_1^2 + 2b_o c_1 c_2 + b_o c_2^2}{2(b_o c_2 + b_i c_1)}$

$= 80 + \dfrac{80\times 10^2 + 2\times 20\times 20\times 80 + 20\times 80^2}{2(20\times 80 + 80\times 20)}$

$= 115mm$

s of the neutral axis, $R = \dfrac{b_i c_1 + b_o c_2}{b_i \ln\left[(r_i + c_1)/r_i\right] + b_o \ln\left[r_o/(r_i + c_1)\right]}$

$= \dfrac{80\times 20 + 20\times 80}{80\ln\left[(80+20)/80\right] + 20\ln\left[180/(80+20)\right]}$

$= 108.08mm$

fore, eccentricity, $e = (\bar{r} - R) = (115 - 108.08)mm = 6.92mm$

ce of the inner fiber, $c_i = R - r_i = (108.08 - 80)mm = 28.08mm$

ce of the outer fiber, $c_o = (c_1 + c_2 - c_i) = (20 + 80 - 28.08)mm = 71.92mm$

sectional area, $A = (b_i c_i + b_o c_2)$

$$= (80\times 20 + 20\times 80)mm^2 = 3200mm^2$$

Bending moment, $M = P\times(\bar{r}+70) = P\times(115+70) = 185P$

Normal stress at the inner fiber, $\sigma_{in} = \frac{Mc_i}{Aer_i} + \frac{P}{A}$

or, $\sigma_a = \frac{Mc_i}{Aer_i} + \frac{P}{A}$

or, $150 = \frac{185P\times 28.08}{3200\times 6.92\times 80} + \frac{P}{3200}$

or, $P = 46.23kN$

Normal stress at the outer fiber, $\sigma_{out} = -\frac{Mc_o}{Aer_o} + \frac{P}{A}$

or, $\sigma_a = -\frac{Mc_o}{Aer_o} + \frac{P}{A}$

or, $-150 = -\frac{185P\times 71.92}{3200\times 6.92\times 180} + \frac{P}{3200}$

or, $P = 49.58kN$

Therefore, the required maximum load, $P = 46.23kN$ *Answer*

Problem P10.24:

A curved beam of trapezoidal cross-section is subjected to a couple of $4725Nm$ as shown in Figure P10.24. Determine the normal stresses at the inner and outer fibers and compare them with the respective stresses for a straight beam having the same bending moment and same cross-sectional area.

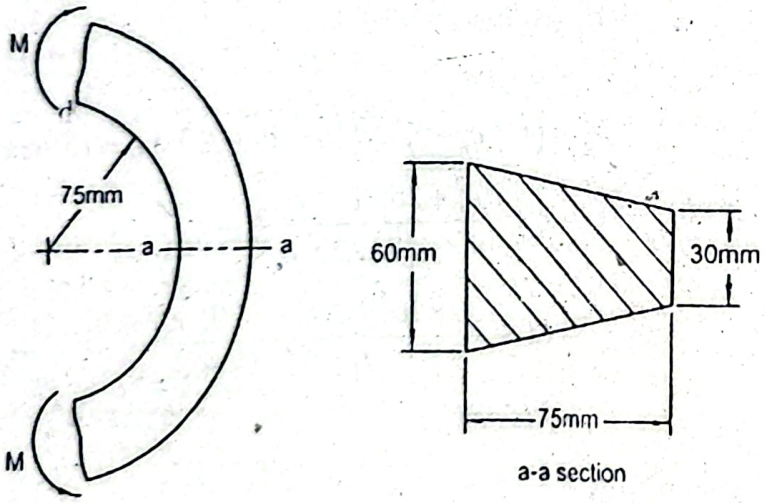

Figure P10.24

Given Data:

Couple, $M = 4725Nm$

To Find:

- Normal stress at inner fiber, σ_i
- Normal stress at outer fiber, σ_o

Ratio σ_i / σ_{in}, where σ_{in} is stress for straight beam

Ratio σ_o / σ_{in}, where σ_{out} is stress for straight beam

olution:

he figure below shows the locations of the neutral and centroidal axes in the cross-ction of the curved beam.

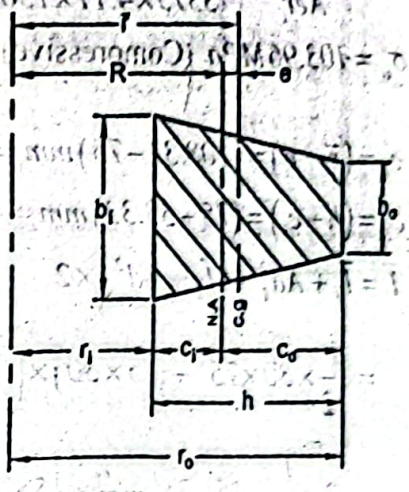

arious dimensions, $b_i = 60mm$

$b_o = 30mm$

$h = 75mm$

dius of the inner fiber, $r_i = 75mm$

dius of the outer fiber, $r_o = (r_i + h) = (75 + 75)mm = 150mm$

oss-sectional area, $A = \frac{h}{2}(b_i + b_o)$

$= \frac{75}{2}(60 + 30)mm^2 = 3375mm^2$

dius of the centroidal axis, $\bar{r} = r_i + \frac{h}{3} \times \frac{b_i + 2b_o}{b_i + b_o}$

$= 75 + \frac{75}{3} \times \frac{60 + 2 \times 30}{60 + 30} = 108.33mm^2$

dius of the neutral axis, $R = \frac{A}{b_o - b_i + \left[(b_i r_o - b_o r_i)/h\right] \ln(r_o / r_i)}$

$= \frac{3375}{30 - 60 + \left[(60 \times 150 - 30 \times 75)/75\right] \ln(150/75)}$

$= 104.22mm$

erefore, eccentricity, $e = \bar{r} - R = (108.33 - 104.22)mm = 4.11mm$

stance of the inner fiber, $c_i = (R - r_i) = (104.22 - 75)mm = 29.22mm$

stance of the outer fiber, $c_o = (h - c_i) = (75 - 29.22)mm = 45.78mm$

rmal stress at the inner fiber of the curved beam,

$$\sigma_i = \frac{Mc_i}{Aer_i} = \frac{4725\times10^3\times29.22}{3375\times4.11\times75}MPa$$

$$= 132.71MPa \text{ (Tensile) } \textit{Answer}$$

Normal stress at outer fiber of the curved beam,

$$\sigma_o = -\frac{Mc_i}{Aer_i} = -\frac{4725\times10^3\times45.78}{3375\times4.11\times150}MPa = -103.96\,MPa$$

That is, $\sigma_o = 103.96MPa$ (Compressive) *Answer*

Now for the straight beam,

Distances, $c_1 = (\bar{r} - r_i) = (108.33 - 75)mm = 33.33mm$

$c_2 = (h - c_1) = (75 - 33.33)mm = 41.67mm$

Centroidal moment of inertia, $\bar{I} = \bar{I}_1 + Ad_1^2 + (\bar{I}_2 + Ad_2^2)\times 2$

$$= \frac{1}{12}\times30\times75^3 + (75\times30)\times\left(\frac{75}{2} - 33.33\right)^2$$

$$+2\left[\frac{1}{36}\times15\times75^3 + \frac{1}{2}\times15\times75\left(33.33 - \frac{75}{3}\right)^2\right]$$

$$= 1523437.54mm^4$$

Normal stress at the inner fiber,

$$\sigma_{in} = \frac{Mc_1}{\bar{I}} = \frac{4725\times10^3\times33.33}{1523437.54}MPa = 103.97MPa$$

Normal stress at the outer fiber,

$$\sigma_{out} = -\frac{Mc_2}{\bar{I}} = -\frac{4725\times10^3\times41.67}{1523437.54}MPa = -129.24MPa$$

Therefore, the required ratio, $\frac{\sigma_i}{\sigma_{in}} = \frac{132.71}{103.37} = 1.28$ *Answer*

and $\frac{\sigma_o}{\sigma_{out}} = \frac{103.96}{129.24} = 0.80$ *Answer*

Problem P10.25:

For a thick walled cylinder subjected to an internal pressure only, show that for a v large outside diameter the maximum tangential stress equals the internal pressure.

Given Data:

Outside diameter, d_o is very large

To Find:

- Maximum tangential stress equals internal pressure

Solution:

Since the outside diameter d_o is very large, the outside radius b is also large as,

$$b = \frac{d_o}{2}$$

We have a relation for the maximum tangential stress,

$$\sigma_{t_{max}} = p_i \times \frac{b^2 + a^2}{b^2 - a^2} = p_i \times \frac{1 + \left(\frac{a}{b}\right)^2}{1 - \left(\frac{a}{b}\right)^2}$$

As the outside radius b is very large compared to the inside radius a, $\frac{a}{b} \to 0$

Then, $\sigma_{t_{max}} = p_i$ ***Proved***

Problem P10.26:

For a thick walled cylinder subjected to an internal pressure only, find a ratio of the maximum tangential stress to the average tangential stress in terms of the ratio of outer radius to the inner radius of the cylinder. For a wall thickness, t equal to one fortieth of the internal diameter, what is the per cent increase of the maximum tangential stress with respect to the average tangential stress?

Given Data:

Ratio of outer radius to inner radius, b/a

To Find:

Ratio of maximum tangential stress to average tangential stress, $\sigma_{t_{max}} / \sigma_{t_{av}}$

Solution:

We have a relation for the maximum tangential stress for a thick walled cylinder,

$$\sigma_{t_{max}} = p_i \times \frac{b^2 + a^2}{b^2 - a^2}$$

We have an expression for the average tangential stress as,

$$\sigma_{t_{av}} = \frac{p_i d_i}{2t} = \frac{p_i 2a}{2(b-a)} = \frac{p_i a}{b-a}$$

Therefore, the required ratio, $\frac{\sigma_{t_{max}}}{\sigma_{t_{av}}} = \frac{p_i \times \frac{b^2 + a^2}{b^2 - a^2}}{\frac{p_i a}{b-a}}$

$$= \frac{(b^2 + a^2)(b-a)}{(b+a)(b-a)a}$$

$$= \frac{b^2 + a^2}{a(b+a)}$$

$$= \frac{\frac{b^2 + a^2}{a^2}}{\frac{b+a}{a}}$$

$$= \frac{1+\left(\frac{b}{a}\right)^2}{1+\left(\frac{b}{a}\right)} \text{ Answer} \qquad (i)$$

Wall thickness, $t = \frac{d_i}{40}$

$$\text{or, } (b-a) = \frac{2a}{40} = \frac{a}{20}$$

$$\text{or, } \frac{b}{a} = \left(1+\frac{1}{20}\right) = \frac{21}{20} = 1.05$$

Substituting this value in Equation (i),

$$\frac{\sigma_{t_{max}}}{\sigma_{t_{av}}} = \frac{1+(1.05)^2}{1+1.05} = 1.026$$

Therefore, $\sigma_{t_{max}}$ is $(1.026-1.0)\times 100 = 2.6\%$ higher than $\sigma_{t_{av}}$ **Answer**

Problem P10.27:

A long concrete pipe of internal diameter $d_i = 1m$ is submerged in water at a depth $40m$ below the water surface. If the allowable stress in compression for concrete is $1.5MPa$, determine the wall thickness of the cylinder assuming uniform distribution of pressure outside the cylinder.

Given Data:

Inside diameter, $d_i = 1000mm$

Depth of water, $H = 40m$

Allowable stress in compression, $\sigma_a = 1.5MPa$

To Find:

Wall thickness, t

Solution:

Maximum tangential stress, $\sigma_{t_{max}} = -p_o \times \frac{2b^2}{b^2-a^2}$

External pressure, $p_o = \rho g H = 1000\times 9.81\times 40 N/m^2 = 0.3924MPa$

Internal radius, $a = \frac{d_i}{2} = \frac{1000}{2} mm = 500mm$

Here, $\sigma_{t_{max}} = \sigma_a = -1.5MPa$

Substituting these values in Equation (i),

$$-1.5 = -0.3924 \times \frac{2b^2}{b^2-500^2}$$

$$\text{or, } b = 724.11mm$$

Therefore, the wall thickness, $t = (b-a)$

$$\text{or, } t = (724.11 - 500)mm$$
$$= 224.11mm \text{ Answer}$$

roblem P10.28:

thick walled cylinder of internal diameter *120mm* contains fluid of pressure *40MPa*. he yield strength of the cylinder material in tension is *350MPa*. Determine the wall ickness of the cylinder considering safety factor of *2.5* against any yielding in the ylinder.

ven Data:

side diameter of cylinder, $d_i = 120mm$

ternal fluid pressure, $p_i = 40MPa$

ield strength of material, $S_y = 350MPa$

afety factor, $n = 2.5$

Find:

Vall thickness, t

lution:

lowable tangential stress, $\sigma_a = \frac{S_y}{2.5} = \frac{350}{2.5} MPa = 140MPa$

e have tangential stress, $\sigma_{t_{max}} = p_i \times \frac{b^2 + a^2}{b^2 - a^2}$

w writing $\sigma_{t_{max}} = \sigma_a$ we find,

$$\text{or, } 140 = 40 \times \frac{b^2 + a^2}{b^2 - a^2}$$
$$\text{or, } 3.5b^2 - 3.5a^2 = b^2 + a^2$$
$$\text{or, } 2.5b^2 = 4.5a^2$$
$$\text{or, } b = \sqrt{\frac{4.5}{2.5}}a = \sqrt{\frac{4.5}{2.5}} \times 60 \quad (\text{Since } a = \frac{d_i}{2} = \frac{120}{2} mm = 60mm)$$
$$= 80.5mm$$

refore, the required wall thickness, $t = (b - a) = (80.5 - 60)mm = 20.5mm$ *Answer*

blem P10.29:

ylindrical pressure vessel has internal diameter of *400mm*, length of *2.5m* and wall kness of *18mm*. Determine the maximum internal pressure that can be applied if the gential and longitudinal stresses are limited to *120MPa* and *125MPa* respectively.

en Data:

rnal diameter of cylinder, $d_i = 400mm$

gth of cylinder, $L = 2.5m$

ll thickness, $t = 18mm$

owable tangential stress, $\sigma_{t_a} = 120MPa$

Allowable longitudinal stress, $\sigma_{l_a} = 125MPa$

To Find:

- Internal fluid pressure, p_i

Solution:

The ratio $\frac{r}{20} = \frac{400}{2\times 20} = 10$

Here wall thickness, $t = 18 > 10$

Therefore, the cylinder is thick walled.

For a thick walled cylinder longitudinal stress,

$$\sigma_l = \frac{a^2 p_i}{b^2 - a^2}$$

But, $a = \frac{d}{2} = \frac{400}{2} mm = 200mm$

and, $b = a + t = (200 + 18) mm = 218mm$

Therefore, $\sigma_{l_a} = 125 = \frac{200^2 \times p_i}{218^2 - 200^2}$

or, $p_i = 23.51MPa$

Tangential stress, $\sigma_{t_{max}} = p_i \times \frac{b^2 + a^2}{b^2 - a^2}$

or, $\sigma_{t_a} = 120 = p_i \times \frac{218^2 + 200^2}{218^2 - 200^2}$

or, $p_i = 10.32MPa$

Therefore, the required internal pressure, $p_i = 10.32MPa$ *Answer*

Problem P10.30:

Two thick walled cylinders of the same dimensions, outer diameter being twice the inne diameter are subjected to fluid pressure. One cylinder is subjected to internal flui pressure and the other is subjected to external fluid pressure. Determine the ratio o pressures if the magnitude of the maximum tangential stress of each cylinder is same Also determine the ratio of pressures if the magnitude of the tangential [illegible] of eac cylinder is same. Consider Poisson's ratio $\nu = 0.30$.

Given Data:

Outer diameter is twice the inner diameter, $d_o = 2d_i$

Maximum tangential stress of each cylinder is same.

Poisson's ratio, $\nu = 0.30$

To Find:

- Ratio of fluid pressure, p_i / p_o when magnitudes of tangential stresses are equal.
- Ratio of fluid pressure, p_i / p_o when magnitudes of tangential strains are equal.

Solution:

For the cylinder with internal fluid pressure,

$$\sigma_{t\,max} = \left| p_i \times \frac{b^2 + a^2}{b^2 - a^2} \right| \qquad (i)$$

the cylinder with external fluid pressure,

$$\sigma_{t\,max} = \left| p_o \times \frac{2b^2}{b^2 - a^2} \right| \qquad (ii)$$

refore, according to the problem, Equations (i) and (ii) are equal,

$$p_i \times \frac{b^2 + a^2}{b^2 - a^2} = p_o \times \frac{2b^2}{b^2 - a^2}$$

or, $\frac{p_i}{p_o} = \frac{2b^2}{b^2 + a^2}$ $\qquad (iii)$

have, $d_o = 2d_i$

or, $2b = 2 \times 2a$

or, $b = 2a$

ituting this value in Equation (iii),

$$\frac{p_i}{p_o} = \frac{2(2a)^2}{(2a)^2 + a^2} = \frac{8}{5} = 1.6 \text{ Answer}$$

in the tangential direction for the cylinder with internal fluid pressure,

$$\varepsilon_{t_i} = \frac{\sigma_{t\,max}}{E} - \nu \frac{\sigma_r}{E}$$

$$= \frac{1}{E}\left[p_i \times \frac{b^2 + a^2}{b^2 - a^2} + \nu p_i \right] \quad (\text{Since } \sigma_r = -p_i)$$

$$= \frac{p_i}{E}\left[\frac{\left(b^2 + a^2 + \nu\left(b^2 - a^2\right)\right)}{b^2 - a^2} \right] \qquad (iv)$$

in the tangential direction for the cylinder with external fluid pressure,

$$\varepsilon_{t_e} = \frac{\sigma_{t\,max}}{E} - \nu \frac{\sigma_r}{E}$$

$$= \frac{1}{E}\left[-p_o \times \frac{2b^2}{b^2 - a^2} + \nu p_o \right] \quad (\text{Since } \sigma_r = -p_o)$$

$$= -\frac{p_o}{E}\left[\frac{2b^2 - \nu\left(b^2 - a^2\right)}{b^2 - a^2} \right] \qquad (v)$$

re, according to the problem from Equations (iv) and (v) considering ide only,

$$\frac{p_i}{E}\left[\frac{\left(b^2 + a^2 + \nu\left(b^2 - a^2\right)\right)}{b^2 - a^2} \right] = \frac{p_o}{E}\left[\frac{2b^2 - \nu\left(b^2 - a^2\right)}{b^2 - a^2} \right]$$

$$\text{or, } \frac{p_i}{p_o} = \frac{2b^2 - \nu\left(b^2 - a^2\right)}{\left(b^2 + a^2\right) + \nu\left(b^2 - a^2\right)} \qquad (vi$$

Now substituting $b/a = 2$ and $\nu = 0.3$,

$$\frac{p_i}{p_o} = \frac{2(2a)^2 - 0.3\left[(2a)^2 - a^2\right]}{(2a)^2 + a^2 + 0.3\left[(2a)^2 - a^2\right]}$$

$$= 1.203 \text{ Answer}$$

Problem P10.31:

A pressurized fluid at $10MPa$ is transmitted through a pipe of internal diameter $300mm$. Find the wall thickness of the pipe considering allowable shearing stress of $80MPa$.

Given Data:

Internal fluid pressure, $p_i = 10MPa$

Internal diameter of pipe, $d_i = 300MPa$

Allowable shearing stress, $\tau_a = 80MPa$

To Find:

- Wall thickness, t

Solution:

Since the ends of the pipe are not restrained, as a result longitudinal stress σ_l is absent.

An element on the inner surface of the pipe is taken as follows.

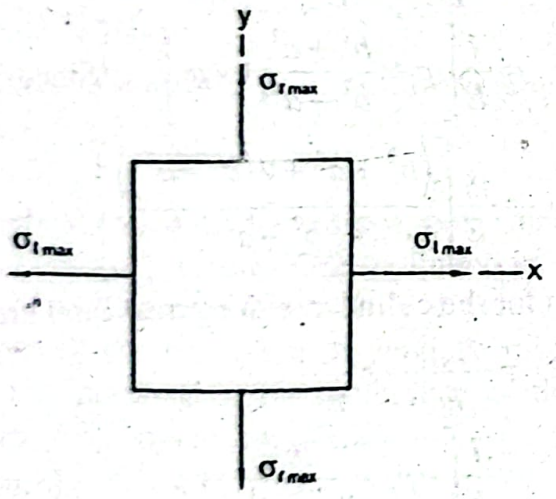

Maximum shearing stress, $\tau_{max} = \left|\frac{\sigma_t - \sigma_r}{2}\right|$

$$\text{or, } 2\tau_{max} = \sigma_t - (-10)$$

$$\text{or, } 2\tau_a = \sigma_t + 10$$

$$\text{or, } 2 \times 80 = \sigma_t + 10$$

$$\text{or, } \sigma_t = 150MPa$$

We have an expression of tangential stress considering a thick walled cylinder,

$$\sigma_{t_{max}} = p_i \times \frac{b^2 + a^2}{b^2 - a^2}$$

or, $150 = 10 \times \frac{b^2 + a^2}{b^2 - a^2}$ (Writing $\sigma_t = \sigma_{t_{max}} = 150MPa$)

or, $15b^2 - 15a^2 = b^2 + a^2$

or, $b = \sqrt{\frac{16}{14}} \times a$

or, $b = \sqrt{\frac{16}{14}} \times 150$ (Since $a = \frac{d_i}{2} = \frac{300}{2} mm = 150mm$)

or, $b = 160.36mm$

herefore, the wall thickness, $t = (b - a) = (160.36 - 150)mm = 10.36mm$

/all thickness, $t = 10.36 > \frac{r}{20} = \frac{300}{2 \times 20} = 7.5$

hat is, the cylinder is thick walled.

herefore, the required wall thickness, $t = 10.36mm$ *Answer*

roblem P10.32:

hydraulic press has a cylinder of internal diameter of $350mm$. The cylinder contains iid of internal pressure of $50MPa$. Determine the wall thickness of the cylinder if the earing stress is not to exceed $80MPa$.

iven Data:

ternal fluid pressure, $p_i = 50MPa$

ternal diameter of cylinder, $d_i = 350MPa$

aximum shearing stress, $\tau_{max} = 80MPa$

Find:

Vall thickness, t

lution:

e cylinder is restrained at the ends. Therefore, the longitudinal stress σ_l exists. A pical element on the inner surface of the cylinder is considered, which is shown below.

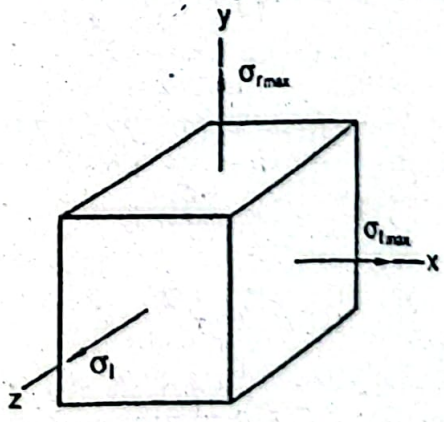

refore, the tri-axial stress elements will be as follows.

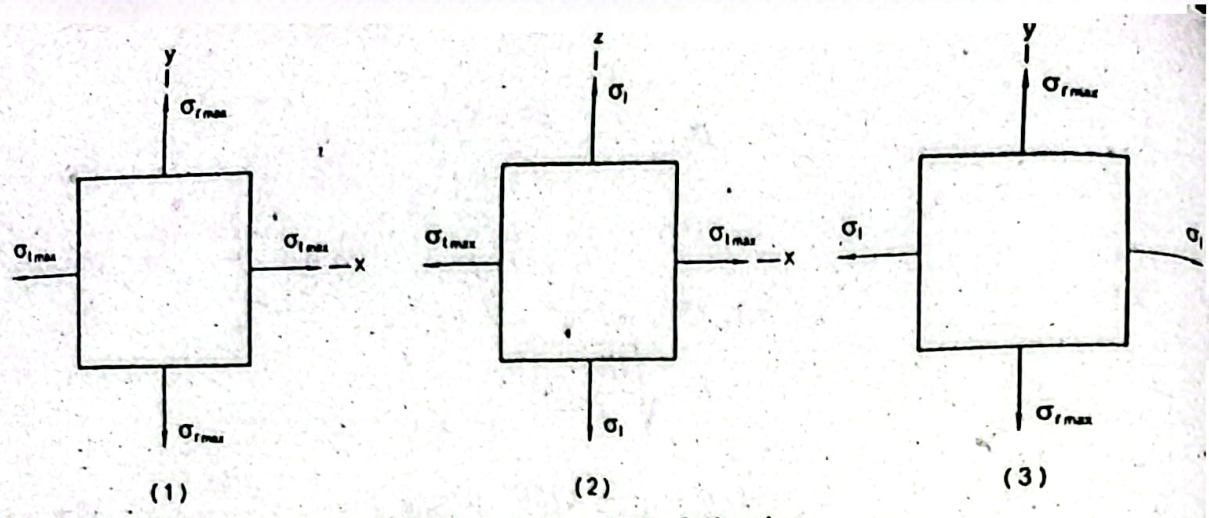

(1) (2) (3)

The maximum shear stress will be any one of the followings.

$$\tau_{max} = \left|\frac{\sigma_{t_{max}} - \sigma_{r_{max}}}{2}\right|, \tau_{max} = \left|\frac{\sigma_{t_{max}} - \sigma_l}{2}\right| \text{ and } \tau_{max} = \left|\frac{\sigma_l - \sigma_{r_{max}}}{2}\right|$$

Considering element (1), $\tau_{max} = \dfrac{\sigma_{t_{max}} - \sigma_{r_{max}}}{2}$

or, $80 = \dfrac{\sigma_{t_{max}} + 50}{2}$ (Since, $\sigma_{r_{max}} = -p_i = -50MPa$)

or, $\sigma_{t_{max}} = 110MPa$

Let us assume that the cylinder is thick walled.

We have a relation for the maximum tangential stress for a thick walled cylinder as,

$$\sigma_{t_{max}} \quad \frac{b^2 + a^2}{b^2 - a^2}$$

or, $110 = 50 \times \dfrac{b^2 + a^2}{b^2 - a^2}$

or, $2.2b^2 - 2.2a^2 = b^2 + a^2$

or, $b = \sqrt{\dfrac{3.2}{1.2}}\, a$

or, $b = \sqrt{\dfrac{3.2}{1.2}} \times 175mm = 285.77mm$

(Since $a = \dfrac{d_i}{2} = \dfrac{350}{2} mm = 175mm$)

Therefore, the wall thickness, $t = (b - a) = (285.77 - 175)mm = 110.77mm$

Now considering element (2), $\tau_{max} = \dfrac{\sigma_{t_{max}} - \sigma_l}{2}$

or, $2\tau_{max} = \sigma_{t_{max}} - \sigma_l$

But we have, $\sigma_l = p_i \dfrac{a^2}{b^2 - a^2}$

bstituting these values, $2\times\tau_{max}=p_i\times\frac{b^2+a^2}{b^2-a^2}-p_i\times\frac{a^2}{b^2-a^2}$

or, $2\tau_{max}=\frac{p_i b^2}{b^2-a^2}$

or, $2\times 80=\frac{50b^2}{b^2-a^2}$

or, $3.2b^2-3.2a^2=b^2$

or, $b=\sqrt{\frac{3.2}{1.2}}\times 175mm=211.06mm$

refore, the wall thickness, $t=(b-a)=(211.06-175)mm=36.06mm$

w considering element (3), $\tau_{max}=\frac{\sigma_1-\sigma_{r_{max}}}{2}$

or, $2\tau_{max}=\sigma_1-\sigma_{r_{max}}$

or, $2\tau_{max}=p_i\times\frac{a^2}{b^2-a^2}-\sigma_{r_{max}}$

or, $2\tau_{max}=p_i\times\frac{a^2}{b^2-a^2}+p_i$ (Since $\sigma_{r_{max}}=-p_i$)

or, $2\times 80=50\left[\frac{a^2}{b^2-a^2}+1\right]$

or, $2\times 80=50\left(\frac{b^2}{b^2-a^2}\right)$

or, $3.2b^2-3.2a^2=b^2$

or, $b=\sqrt{\frac{3.2}{2.2}}\ a=\sqrt{\frac{3.2}{2.2}}\times 175mm=211.06mm$

efore, the wall thickness, $t=(b-a)=(211.06-175)mm=36.06mm$

the wall thickness is the maximum of the three values obtained above.
is, $t=110.77mm$. Now to check,

l thickness, $t=110.77>\frac{r}{20}=\frac{350}{2\times 20}=8.85$

is, the cylinder is thick walled.
efore, the required wall thickness, $t=110.77mm$ *Answer*

lem P10.33:

ylindrical pressure vessel of $400mm$ internal diameter and $2.5m$ length contains surized fluid of $20MPa$ inside the cylinder. Shear yield strength of the cylinder rial is $210MPa$ and safety factor to guard against yielding in shear is 2.5. Determine vall thickness of the cylinder based on shearing strength.

n Data:

nal fluid pressure, $p_i=20MPa$

Length of cylinder, $L = 2.5m$

Internal diameter of cylinder, $d_i = 400mm$

Shear yield strength, $S_{s_y} = 210MPa$

Safety factor, $n = 2.5$

To Find:

- Wall thickness, t

Solution:

The cylinder is restrained at both the ends, as a result the cylinder will be subjected to tri-axial stresses, σ_t, σ_r and σ_l. A cubical volume element on the inner surface of the cylinder is considered as follows.

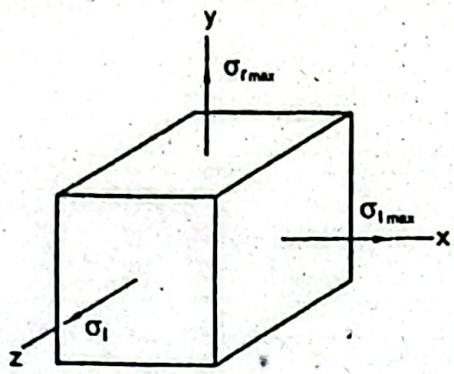

Bi-axial stress elements will be as follows,

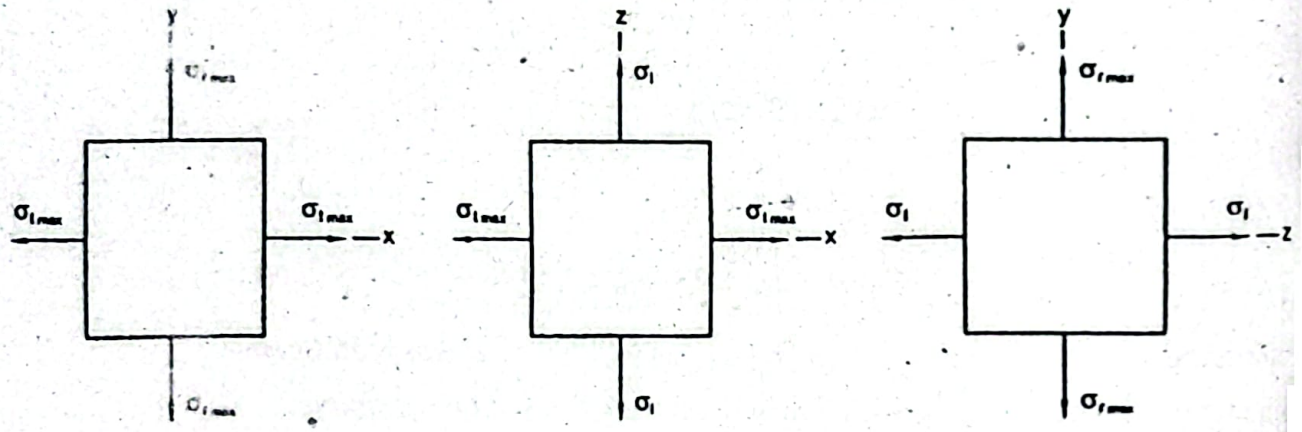

The maximum shear stress will be any one of the followings.

$$\tau_{max} = \left|\frac{\sigma_{t_{max}} - \sigma_{r_{max}}}{2}\right|, \tau_{max} = \left|\frac{\sigma_{t_{max}} - \sigma_l}{2}\right| \text{ and } \tau_{max} = \left|\frac{\sigma_l - \sigma_{r_{max}}}{2}\right|$$

Considering element (1), $\tau_{max} = \dfrac{\sigma_{t_{max}} - \sigma_{r_{max}}}{2}$

Allowable shearing stress, $\tau_a = \dfrac{S_{s_y}}{n} = \dfrac{210}{2.5} MPa = 84MPa$

Therefore, $\tau_a = \dfrac{\sigma_{t_{max}} - \sigma_{r_{max}}}{2}$

or, $2\times 84 = \sigma_{t_{max}} - (-20)$

or, $\sigma_{t_{max}} = 148MPa$

dering the cylinder as thick walled we find a relation,

$$\sigma_{t_{max}} = p_i \times \frac{b^2 + a^2}{b^2 - a^2}$$

or, $148 = 20 \times \frac{b^2 + a^2}{b^2 - a^2}$

or, $7.4b^2 - 7.4a^2 = b^2 + a^2$

or, $b = \sqrt{\frac{8.4}{6.4}}\, a$

$= \sqrt{\frac{8.4}{6.4}} \times 200mm$ (Since $a = \frac{d_i}{2} = \frac{400}{2} mm = 200mm$)

$= 229.13mm$

, the wall thickness, $t = (b - a) = (229.13 - 200)mm = 29.13mm$

dering element (2), $\tau_{max} = \frac{\sigma_{t_{max}} - \sigma_l}{2}$

or, $2\tau_a = \sigma_{t_{max}} - \sigma_l$

or, $2\times 84 = \sigma_{t_{max}} - \sigma_l$

have, $\sigma_l = p_i \frac{a^2}{b^2 - a^2}$

ore, $168 = p_i \times \frac{b^2 + a^2}{b^2 - a^2} - p_i \times \frac{a^2}{b^2 - a^2}$

or, $168 = p_i \times \frac{b^2}{b^2 - a^2}$

or, $168 = 20 \times \frac{b^2}{b^2 - a^2}$

or, $8.4b^2 - 8.4a^2 = b^2$

or, $b = \sqrt{\frac{8.4}{7.4}}\, a = \sqrt{\frac{8.4}{7.4}} \times 200mm = 213.09mm$

the wall thickness, $t = (b - a) = (213.09 - 200)mm = 13.09mm$

ering element (3), $\tau_{max} = \frac{\sigma_l - \sigma_{r_{max}}}{2}$

or, $2\tau_a = \sigma_l - \sigma_{r_{max}}$

or, $2\times 84 = p_i \times \frac{a^2}{b^2 - a^2} + p_i$ (Since $\sigma_{r_{max}} = -p_i$)

or, $168 = 20 \times \frac{b^2}{b^2 - a^2}$

$$\text{or, } 8.4b^2 - 8.4a^2 = v$$

$$\text{or, } b = \sqrt{\frac{8.4}{7.4}}\,a = \sqrt{\frac{8.4}{7.4}} \times 200mm = 213.09mm$$

Hence, the wall thickness, $t = (b-a) = (213.09 - 200)mm = 13.09mm$

Here the wall thickness is the maximum of the three values obtained above.
That is, $t = 29.13mm$. Now to check,

Wall thickness, $t = 29.13 > \frac{r}{20} = \frac{2100}{2 \times 20} = 10$

That is, the cylinder is thick walled.
Therefore, the required wall thickness, $t = 29.13mm$ *Answer*

Problem P10.34:
A steel cylinder of external diameter $400mm$ is to be shrunk to a rigid solid shaft o diameter $250mm$ so that the pressure developed between the cylinder and the shaft i $6MPa$. Determine the initial difference of the shaft diameter and the internal diameter o the cylinder. Consider modulus of elasticity $E_{st} = 200GPa$ and Poisson's ratio $\nu = 0.3$.

Given Data:
Diameter of solid shaft, $d_s = 250mm$

External diameter of cylinder, $d_o = 400MPa$

Pressure developed, $p_i = 6MPa$

Modulus of elasticity, $E_{st} = 200GPa$

Poisson's ratio, $\nu = 0.3$

To Find:
- Initial difference of diameters of shaft and cylinder, Δd

Solution:
Internal pressure of the cylinder, $p_i = 6MPa$

Let us consider the initial internal diameter of the cylinder is d_i.

Internal radius of the cylinder, $a = \frac{d_i}{2} = \frac{250}{2}mm = 125mm$ (Considering $d_i \approx d_s$)

External radius of the cylinder, $b = \frac{d_o}{2} = \frac{400}{2}mm = 200mm$

Maximum tangential stress, $\sigma_{t_{max}} = p_i \times \frac{b^2 + a^2}{b^2 - a^2}$

$$= 6 \times \frac{200^2 + 125^2}{200^2 - 125^2} MPa$$

$$= 13.69MPa$$

Strain in the tangential direction, $\varepsilon_t = \frac{1}{E}\left(\sigma_{t_{max}} - \nu\sigma_r\right)$

$$= \frac{1}{E}\left(\sigma_{t_{max}} + \nu p_i\right) \quad (\text{Since } \sigma_r = -p_i)$$

$$= \frac{1}{200\times10^3}(13.69+0.3\times6)\,mm/mm$$

$$= 7.745\times10^{-5}\,mm/mm$$

ccording to the problem, $\pi d_i(1+\varepsilon_t) = \pi d_s$

$$\text{or, } d_i = \frac{d_s}{1+\varepsilon_t} = \frac{250}{1+7.745\times10^{-5}}\,mm = 249.9806mm$$

herefore, the required difference of diameters,

$$\Delta d = (250.0 - 249.9806)\,mm = 0.0194mm \quad \textit{Answer}$$

roblem P10.35:

long alloy steel cylinder of outside and inside diameters of *300mm* and *150mm* spectively, is subjected to an internal fluid pressure of *150MPa*. Determine the ngential and radial stress distributions, maximum shearing stress, change in outside and side diameters. Consider modulus of elasticity $E_s = 200GPa$ and Poisson's ratio =0.3.

ven Data:

tside diameter, $d_o = 300mm$

side diameter, $d_i = 150mm$

rnal fluid pressure, $p_i = 150MPa$

dulus of elasticity of steel, $E_{st} = 200GPa$

sson's ratio of steel, $\nu = 0.30$

Find:

angential and radial stress distributions

aximum shearing stress, τ_{max}

ange in outside and inside diameters, Δd_o and Δd_i

ution:

e, $d_i = 150mm$, therefore, $a = \frac{d_i}{2} = \frac{150}{2}\,mm = 75mm$

$d_o = 300mm$, therefore, $b = \frac{d_o}{2} = \frac{300}{2}\,mm = 150mm$

gential stress, $\sigma_t = \frac{a^2 p_i}{b^2 - a^2}\left(1 + \frac{b^2}{r^2}\right)$

$$= \frac{75^2\times150}{150^2 - 75^2}\left(1 + \frac{150^2}{r^2}\right)$$

$$= 50\left(1 + \frac{150^2}{r^2}\right) = \left(50 + \frac{1125\times10^3}{r^2}\right) \qquad (i)$$

ave for radial stress, $\sigma_r = \frac{a^2 p_i}{b^2 - a^2}\left(1 - \frac{b^2}{r^2}\right)$

$$= \frac{75^2 \times 150}{150^2 - 75^2}\left(1 - \frac{150^2}{r^2}\right)$$

$$= \left(50 - \frac{1125 \times 10^3}{r^2}\right) \qquad (ii$$

Table 10.35: Distribution of stress

r	75	82.5	90	97.5	105	112.5	120	127.5	135	142.5	150
σ_t	250	215.29	188.89	168.34	152.04	138.89	128.13	119.20	111.73	105.40	100
σ_r	-150	-115.29	-88.89	-68.34	-52.04	-38.89	-28.13	-19.20	-11.73	-5.40	0.0

The distributions of tangential and radial stresses are shown below in Figure P10.35a an Figure P10.35b respectively.

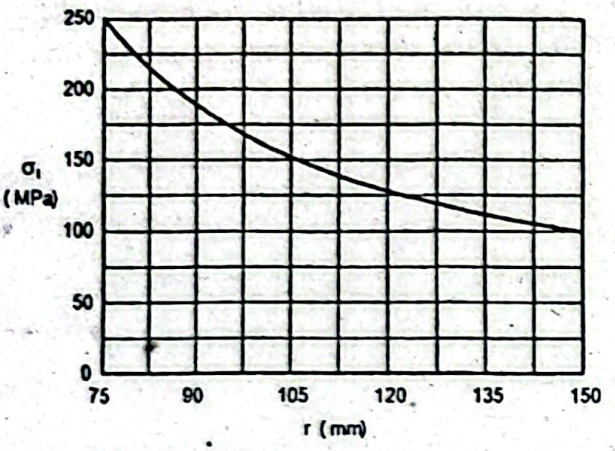

Figure P10.35a: Distribution of Tangential Stress with Radius.

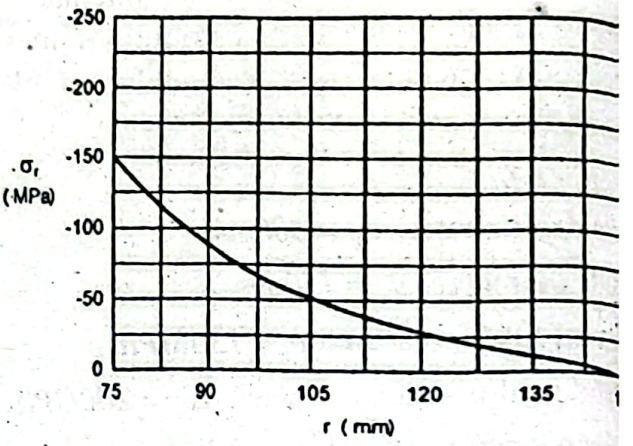

Figure P10.35b: Distribution of Radial Stress with Radius

Maximum shearing stress, $\tau_{max} = \frac{\sigma_{t_{max}} - \sigma_{r_{max}}}{2} = \frac{250 + 150}{2} MPa = 200MPa$ **Answer**

For a long cylinder with no end cap, the longitudinal stress σ_l is not considered.

Strain in the tangential direction at the outside fiber,

$$\varepsilon_{t_o} = \frac{1}{E}[\sigma_t - \nu\sigma_r]$$

$$= \frac{1}{200 \times 10^3}[100 - 0.3 \times 0]mm/mm = 5 \times 10^{-4} mm/mm$$

Strain in the tangential direction at the inside fiber,

$$\varepsilon_{t_i} = \frac{1}{E}\left[\sigma_{t_{max}} - \nu\sigma_{r_{max}}\right]$$

$$= \frac{1}{200 \times 10^3}[250 + 0.3 \times 150]mm/mm$$

$$= 1.475 \times 10^{-3} mm/mm$$

Change in the outside diameter, $\Delta d_o = \varepsilon_{t_o} \times d_o = 5 \times 10^{-4} \times 300mm = 0.15mm$ **Answer**

Change in the inside diameter, $\Delta d_i = \varepsilon_{t_i} \times d_i = 1.475 \times 10^{-3} \times 150mm = 0.22mm$ **Answer**

oblem E10.1:
member as shown in Figure E10.1 is subjected to a tensile load P. If the allowable rmal stress is $120MPa$, determine the maximum value of load P that can be applied.

Ans.: $P = 15kN$

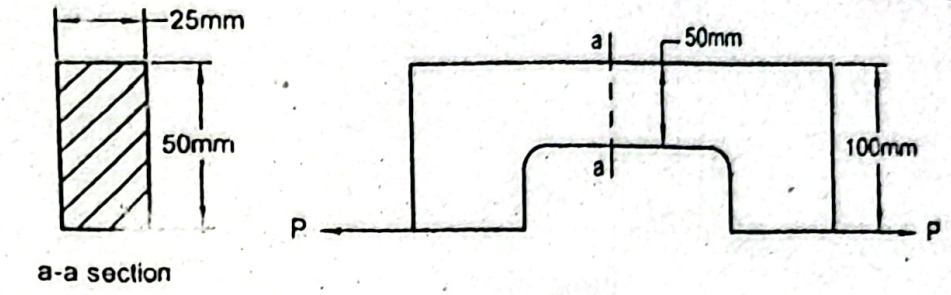

Figure E10.1

roblem E10.2:
hollow bracket ABC of uniform circular section with outside diameter $d_o = 60mm$ and side diameter $d_i = 0.5d_o$ is subjected to a load $P = 5kN$ as shown in Figure E10.2. etermine the maximum normal stress at the built in end A of the bracket.

Ans.: $\sigma_A = 65.23MPa$ (Tensile)

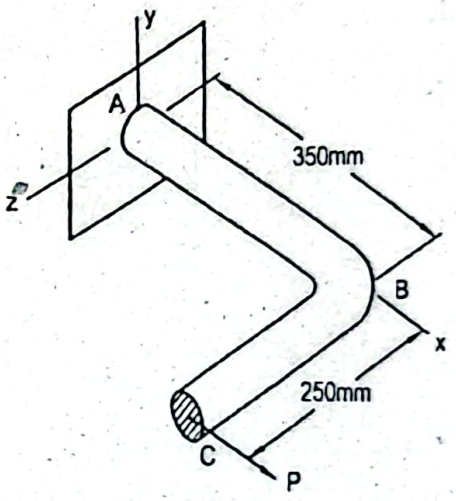

Figure E10.2

roblem E10.3:
hollow circular shaft of outer diameter $d_o = 100mm$, inner diameter $d_i = 0.5d_o$ is ubjected to an axial tensile load of $5kN$ and a bending load of $3000Nm$. It transmits $250kW$ power at $1500rpm$. Determine the maximum normal stress and maximum hearing stress developed in the shaft.

Ans.: $\sigma_{max} = 33.44MPa$; $\tau_{max} = 8.64MPa$

roblem E10.4:
A bent rod of uniform circular diameter $d = 60mm$ is subjected to a load $P = 2kN$ at its free end as shown in Figure E10.4. Determine the normal stresses at the points A and B at the built in end. The load P acts in a plane parallel to x-y plane.

Ans.: $\sigma_A = 16.15MPa$ (Tensile); $\sigma_B = 59.35MPa$ (Tensile)

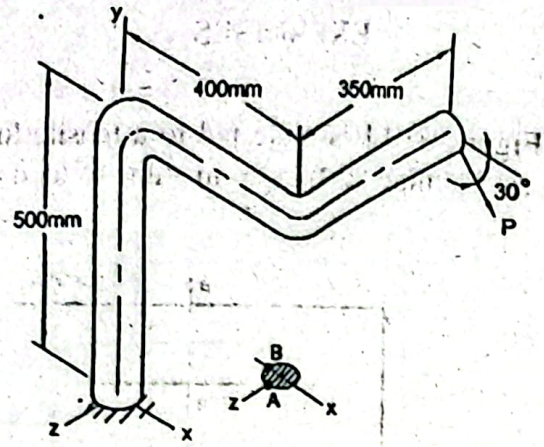

Figure E10.4

Problem E10.5:

A steel bracket of rectangular cross-section supports a load $P = 50kN$ as shown in Figure E10.5. If the normal stress is not to exceed $130MPa$, determine the dimension h of the section *a-a*.

Ans.: $h = 100mm$

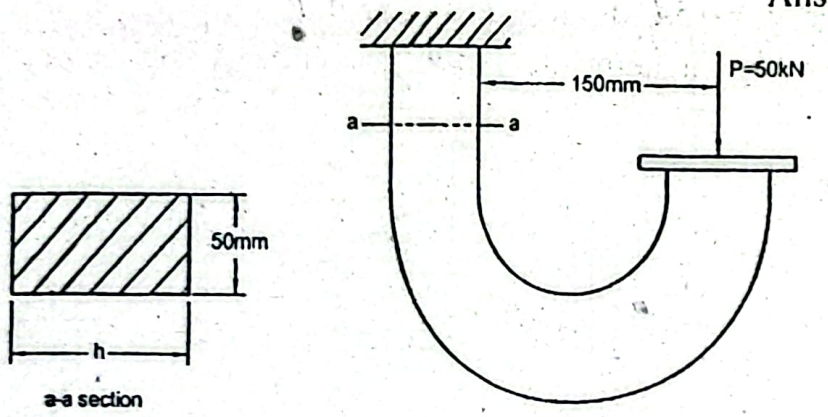

Figure E10.5

Problem E10.6:

A split ring of rectangular cross-section supports a load P as shown in Figure E10.6. If the allowable normal stress is $130MPa$, determine the maximum load P that can be applied.

Ans.: $P = 42.24kN$

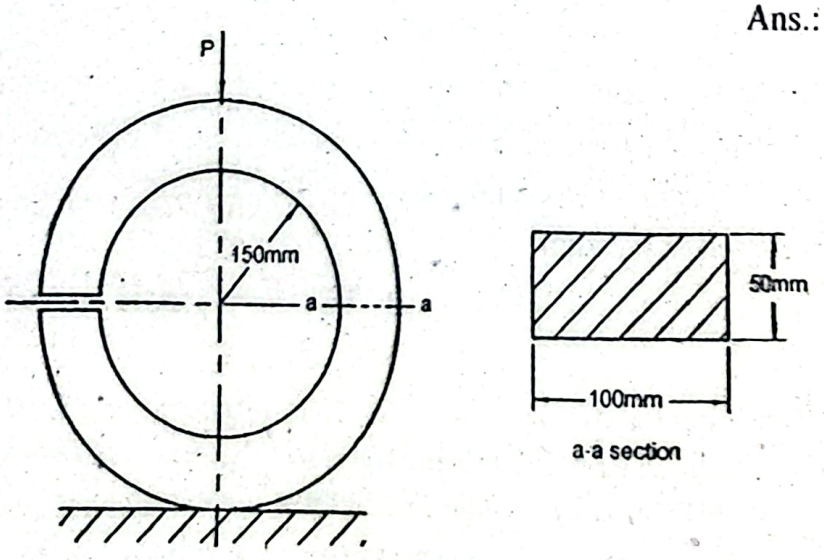

Figure E10.6

Problem E10.7:

A crane hook of circular cross-section supports a load $P = 50kN$ as shown in Figure 10.7. Determine the normal stresses at the inner and outer fibers.

Ans.: $\sigma_{in} = 152.40MPa$ (Tensile); $\sigma_{out} = 65.31MPa$ (Compressive)

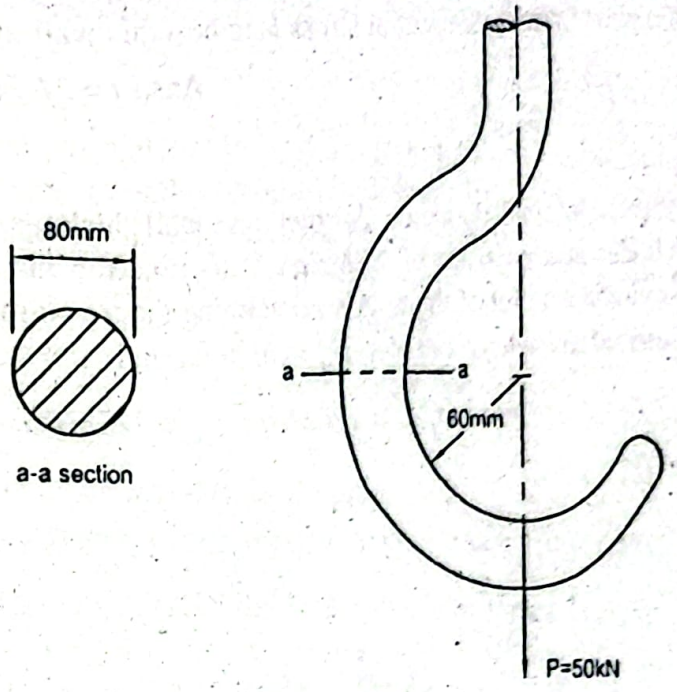

Figure E10.7

Problem E10.8:

A curved beam as shown in Figure E10.8 is subjected to a bending moment M. If the normal stress is not to exceed $140MPa$, determine the maximum moment M that can be applied.

Ans.: $M = 5559.16Nm$

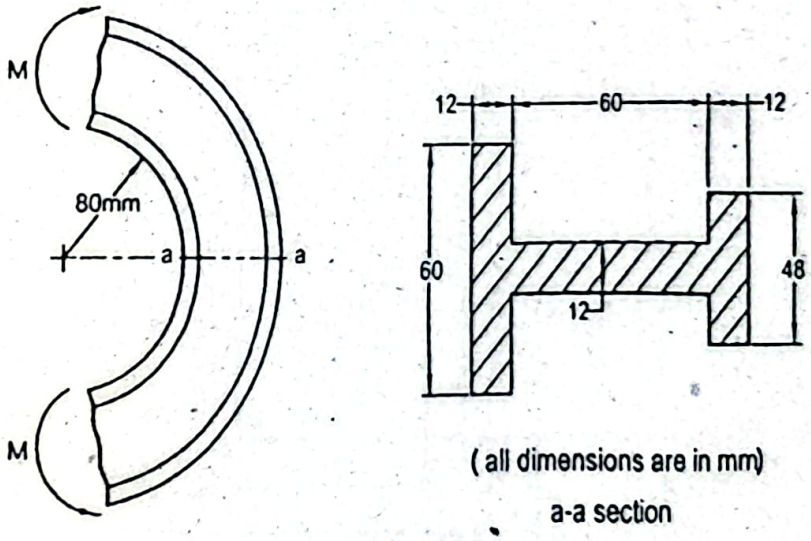

Figure E10.8

Problem E10.9:

A fluid pressure of $30MPa$ is applied at the outside surface of a thick walled cylinder having internal diameter of $120mm$. If the tangential stress is not to exceed $100MPa$, determine the wall thickness of the cylinder.

Ans.: $t = 34.87mm$

Problem E10.10:

(a) Determine the wall thickness of a cylindrical pressure vessel of internal diame *500mm*, which is subjected to an internal pressure of *10MPa* such that the tangenti stress is not to exceed *120MPa*. (b) What maximum internal pressure may be applied, this cylinder for the same limiting tangential stress is to be a thin walled cylinder?

Ans.: $t = 21.78mm;\ p_i = 6MPa$

Problem E10.11:

A long steel cylinder of internal diameter *240mm* and wall thickness *80mm* contains fluid inside the cylinder at a pressure of *80MPa*. Determine the tangential and radial stress distribution and make a plot of them. Also determine the maximum shearing stress and the change in internal diameter. Consider $E_{st} = 200GPa$ and $\nu = 0.3$.

Ans.: $\sigma_{t\,max} = 170MPa;\ \tau_{max} = 125MPa;\ \Delta d_i = 0.233mm$

uestion 11.1: Find expressions of centroid of a homogeneous body based on weight, ass, volume and area.

nswer:

homogeneous body of weight W is shown in Figure 11.1. The perpendicular distance the centroid and some small elements of the body from the y-z plane are shown in this gure. Since the moment of weight of the body through the centroid and the sum of the oments of all the small elements of the whole body will be equal, as a result, nsidering the moment about x-z plane, we obtain,

$$W \times \bar{x} = \Delta W_1 \times x_1 + \Delta W_2 \times x_2 + \Delta W_3 \times x_3 + \ldots\ldots \qquad (11.1)$$

here,

$\bar{x}$ = Normal distance of centroid from y-z plane

$x_1, x_2, x_3 \ldots$ = Normal distance from y-z plane to the elements $\Delta W_1, \Delta W_2, \Delta W_3 \ldots$ respectively

rom Equation (11.1) we can find the x co-ordinate of the centroid as,

$$\bar{x} = \frac{\int x dW}{W} \qquad (11.2)$$

imilarly, the y and z co-ordinates of the centroid are obtained as,

$$\bar{y} = \frac{\int y dW}{W} \text{ and } \bar{z} = \frac{\int z dW}{W} \qquad (11.3)$$

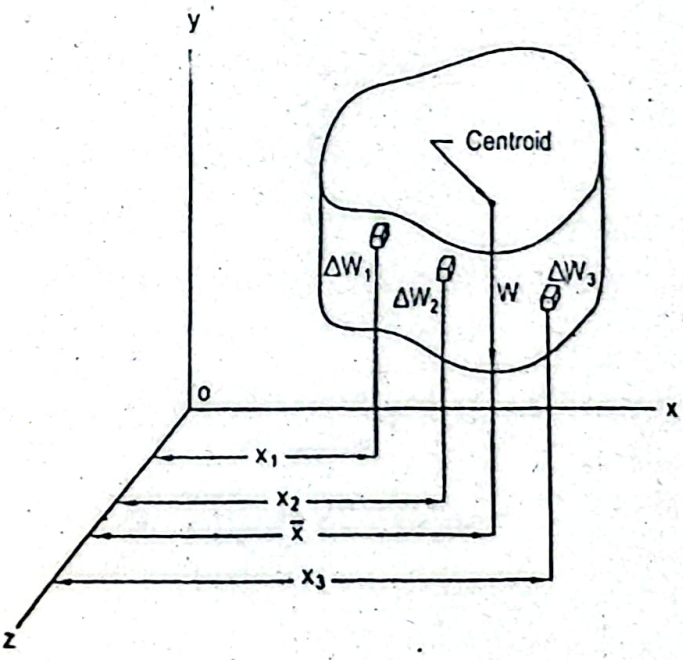

Figure 11.1: A Homogeneous Body Showing Centroid and Elements.

We know $W = mg$ where, m is the mass of the body. Substituting this value in Equat (11.2) and (11.3) we find,

$$\bar{x} = \frac{\int xdm}{m},\ \bar{y} = \frac{\int ydm}{m} \text{ and } \bar{z} = \frac{\int zdm}{m} \quad (1$$

Again, substituting $m = \rho V$ in Equation (11.4), where, V is the volume of the body ρ is the constant density, one obtains,

$$\bar{x} = \frac{\int xdV}{V},\ \bar{y} = \frac{\int ydV}{V} \text{ and } \bar{z} = \frac{\int zdV}{V} \quad (1$$

Now if we consider an area of uniform thickness t such that, $V = tA$, then substitut this value in Equations (11.5), one finds,

$$\bar{x} = \frac{\int xdA}{A},\ \bar{y} = \frac{\int ydA}{A} \text{ and } \bar{z} = \frac{\int zdA}{A} \quad (11$$

The terms $\int xdA$, $\int ydA$ and $\int zdA$ are called the *first moment of area.*

Centroid of the composite areas can be obtained from the following expressions,

$$\bar{x} = \frac{\Sigma x_i A_i}{A_i},\ \bar{y} = \frac{\Sigma y_i A_i}{A_i} \text{ and } \bar{z} = \frac{\Sigma z_i A_i}{A_i} \quad (11.$$

Question11.2: Define moments of inertia of area.

Answer:

The mathematical definitions of the *moments of inertia of area* about the x and y axes a respectively as follows,

$$I_x = \int y^2 dA \quad (11.8$$

$$I_y = \int x^2 dA \quad (11.9$$

where, dA = Differential area

The co-ordinates of center of the differential area dA is (x, y) is shown in Figure 11.2.

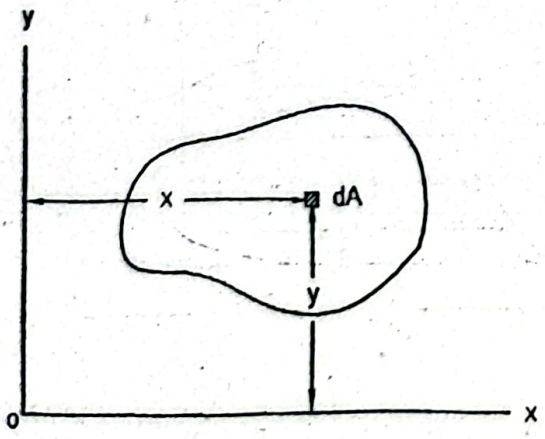

Figure 11.2: A Differential Area Showing x-y Co-ordinates.

d *second moment of area.* In reality the area moment of inertia does not carry any ysical meaning but it has application in many engineering formulas, e.g. flexure rmula, where it is the important parameter.

uestion 11.3: What is polar moment of inertia of area?

nswer:

oment of inertia of an area with respect to an axis normal to the plane of area is called e *polar moment of inertia.* It is denoted by the symbol *J.* Moment of inertia of an area the *x-y* plane about an axis passing through the origin *o* that is, *z-* axis as shown in igure 11.3 is obtained as,

$$J = \int r^2 dA = \int (x^2 + y^2) dA = \int x^2 dA + \int y^2 dA = I_x + I_y \qquad (11.10)$$

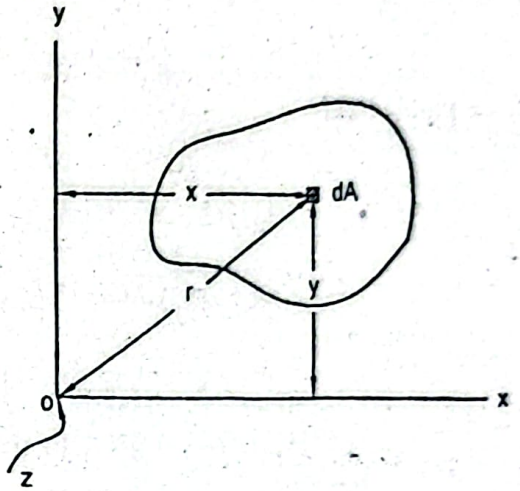

Figure 11.3: A Differential Area Showing Various Co-ordinates.

Question 11.4: Define radius of gyration?

Answer:

Radius of gyration k is defined as,

$$k = \sqrt{\frac{I}{A}} \qquad (11.11)$$

where,

I = Moment of inertia of area

A = Area

Radius of gyration has many engineering applications. It is used in the analysis of a column. When the total area A is considered as a narrow strip at a distance of k from an axis as shown in Figure 11.4, then the moment of inertia of that area is obtained as,

$$I = Ak^2 \qquad (11.12)$$

Equation (11.12) gives the geometric interpretation of the radius of gyration.

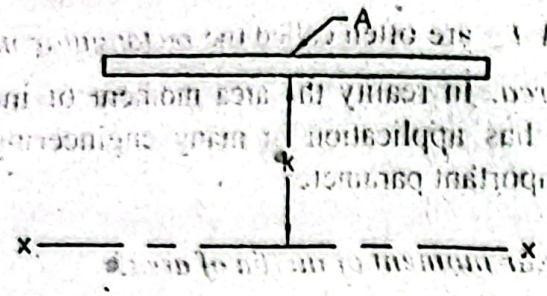

Figure 11.4: Geometric Interpretation of Radius of Gyration.

Question11.5: Find transfer formula of moment of inertia.

Answer:

Often it is necessary to transfer the moment of inertia between the parallel axes. In Figure 11.5, there are two parallel axes x and x_o at a distance of d. The moment of inertia with respect to the centroidal axis x_o is,

$$\bar{I}_x = \int y^2 dA \tag{11.13}$$

Moment of inertia about the parallel axis x is,

$$I_x = \int (y+d)^2 dA$$

$$= \int y^2 dA + 2d \int y dA + d^2 \int dA \tag{11.14}$$

Here the distance d is a constant quantity. We know that $\bar{y}A = \int y dA$, hence $\int y dA$ is zero because when the centroid is determined with respect to the centroidal axis x_o, distance $\bar{y}$ becomes zero. Therefore, Equation (11.14) reduces to,

$$I_x = \int y^2 dA + d^2 \int dA \tag{11.15}$$

Now from Equations (11.13) and (11.15) we obtain,

$$I_x = \bar{I}_x + Ad^2 \tag{11.16}$$

That is, the moment of inertia about any axis is the sum of the moment of inertia with respect to the parallel centroidal axis plus the product of the area and the square of the distance between the parallel axes.

For the polar moment of inertia we may find a similar transfer formula like (11.16) and is given by,

$$J = \bar{J} + Ad^2 \tag{11.17}$$

Using Equations (11.12) and (11.16) we can obtain a relation between radii of gyration as follows,

$$k^2 = \bar{k}^2 + d^2 \tag{11.18}$$

where,

$\bar{k}$ = Centroidal radius of gyration

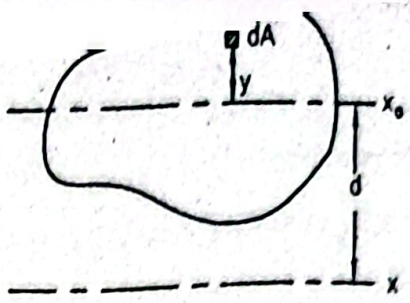

Figure 11.5: Transfer of Moment of Inertia between Parallel Axes.

uestion11.6: What is product of inertia? Find transfer formula for product of inertia.

nswer:

he mathematical expression of the *product of inertia of area* as shown in Figure 11.6 is ven by,

$$I_{xy} = \int xydA \qquad (11.19)$$

his product of inertia is needed to determine the maximum and minimum moments of ertia.

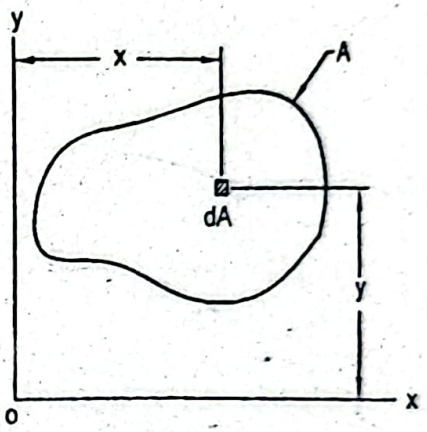

Figure 11.6: Differential Area with *x*-*y* Co-ordinates.

e sign of the product of inertia will depend on the location of the area. On the first and rd quadrants its value is positive; on the other hand, on the second and fourth quadrants value is negative. This depends on the signs of *x*, *y* and the product. The product is sitive when the signs are same.

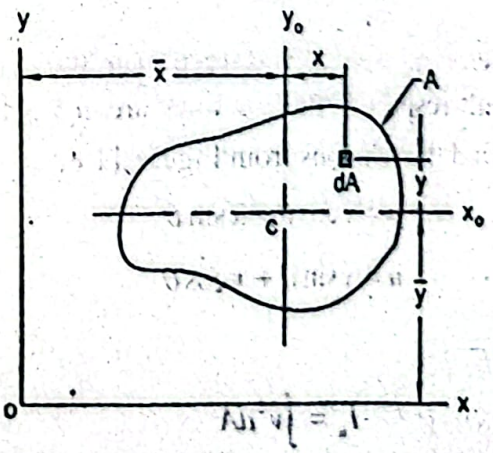

Figure 11.7: Product of Inertia between Parallel Axes.

The product of inertia with respect to the centroidal axes (Figure 11.7),

$$\bar{I}_{xy} = \int xy\,dA \tag{11.20}$$

The product of inertia with respect to the x and y axes,

$$I_{xy} = \int (\bar{x} + \bar{x})(y + \bar{y})\,dA$$

$$= \int xy\,dA + \bar{x}\int y\,dA + \bar{y}\int x\,dA + \overline{xy}\int dA$$

Since x and y have been taken with respect to the centroidal axes, $\int x\,dA$ and $\int y\,dA$ are zero, therefore,

$$I_{xy} = \int xy\,dA + \overline{xy}\int dA$$

$$\text{or, } I_{xy} = \bar{I}_{xy} + \overline{xy}A \tag{11.21}$$

The product of inertia with respect to the axis of symmetry is zero.

Question11.7: Derive expressions for principal moments of inertia.

Answer:

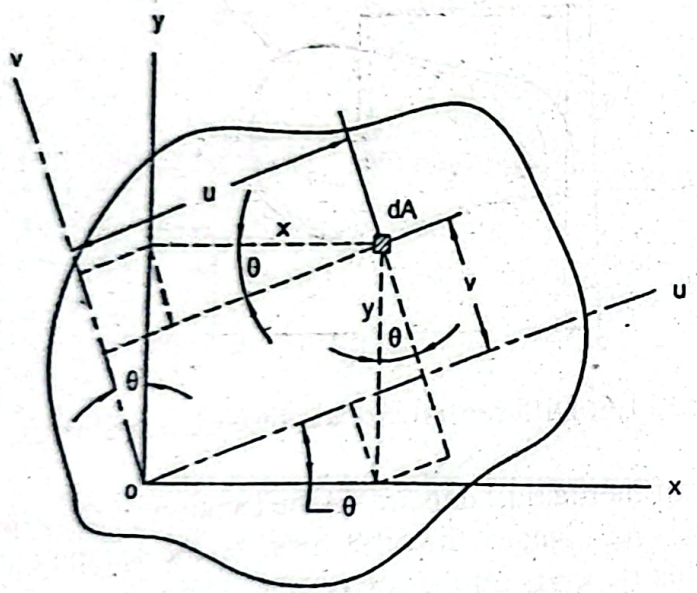

Figure 11.8: Moments of Inertia with Respect to Inclined Axes.

The co-ordinates of the differential area dA with respect to the x-y axes are x, y while the co-ordinates of this area with respect to the u-v axes are u, v. The u-v axes have been rotated by an angle θ. We find the relations from Figure 11.8,

$$v = y\cos\theta - x\sin\theta \tag{11.22}$$

$$u = y\sin\theta + x\cos\theta \tag{11.23}$$

By definition, I_u and I_v are,

$$I_u = \int v^2\,dA \tag{11.24}$$

$$I_v = \int u^2 dA \qquad (11.25)$$

Substituting the value of v from Equation (11.22) in Equation (11.24) we find,

$$I_u = \int (y^2 \cos^2\theta - 2xy \sin\theta\cos\theta + x^2 \sin^2\theta) dA$$

Since we have $I_x = \int y^2 dA$, $I_y = \int x^2 dA$ and $I_{xy} = \int xy dA$, therefore,

$$I_u = I_y \cos^2\theta + I_y \sin^2\theta - I_{xy} \sin 2\theta \qquad (11.26)$$

We have the relations,

$$\cos^2\theta = \frac{1+\cos 2\theta}{2} \quad \text{and} \quad \sin^2\theta = \frac{1-\cos 2\theta}{2} \qquad (11.27)$$

Substituting these values in Equation (11.26),

$$I_u = \frac{I_x + I_y}{2} + \frac{I_x - I_y}{2}\cos 2\theta - I_{xy} \sin 2\theta \qquad (11.28)$$

Similarly, substituting the value of u from Equation (11.23) in Equation (11.25) one finds,

$$I_v = \int (y^2 \sin^2\theta + 2xy \sin\theta\cos\theta + x^2 \cos^2\theta) dA$$

which becomes, $$I_v = I_x \sin^2\theta + I_y \cos^2\theta + I_{xy} \sin 2\theta \qquad (11.29)$$

Now using relations from Equation (11.27) we obtain,

$$I_v = \frac{I_x + I_y}{2} - \frac{I_x - I_y}{2}\cos 2\theta + I_{xy} \sin 2\theta \qquad (11.30)$$

Now for the maximum or minimum value of I_u, its derivative with respect to θ is zero. Here I_x, I_y and I_{xy} are constant values, therefore;

$$\frac{dI_u}{d\theta} = -(I_x - I_y)\sin 2\theta - 2I_{xy}\cos 2\theta = 0$$

$$\text{or, } \tan 2\theta = -\frac{I_{xy}}{\left(\frac{I_x - I_y}{2}\right)} \qquad (11.31)$$

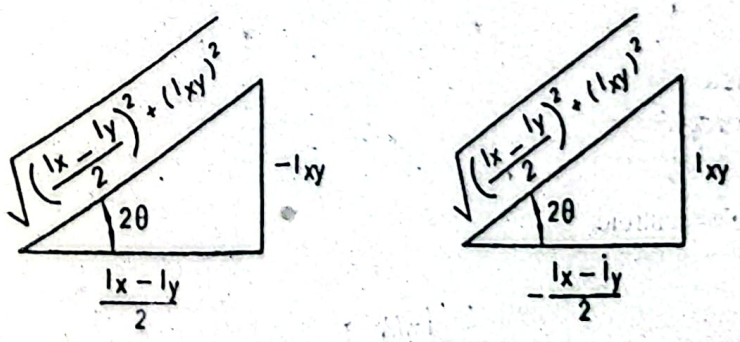

Figure 11.9: Graphical Interpretation of Angle in Equation (11.28).

Now substituting the values of $\cos 2\theta$ and $\sin 2\theta$ in Equation (11.28) and using Figu 11.9 and simplifying,

$$I_u(\max/\min) = \frac{I_x + I_y}{2} \pm \sqrt{\left(\frac{I_x - I_y}{2}\right)^2 + (I_{xy})^2} \qquad (11.32)$$

The maximum and minimum values of the moment of inertia are known as the *principa moments of inertia* and the corresponding axes are called the *principal axes*.

The product of inertia with respect to the u-v axes,

$$I_{uv} = \int uv dA$$

Substituting the values of v and u from Equations (11.22) and (11.23) respectively,

$$I_{uv} = \int (y^2 \sin\theta\cos\theta + xy\cos^2\theta - xy\sin^2\theta - x^2\sin\theta\cos\theta) dA$$

$$= \frac{I_x}{2}\sin 2\theta + I_{xy}\cos^2\theta - I_{xy}\sin^2\theta - \frac{I_y}{2}\sin 2\theta$$

Using the relation, $\cos^2\theta - \sin^2\theta = \cos 2\theta$, one finds,

$$I_{uv} = \frac{I_x - I_y}{2}\sin 2\theta + I_{xy}\cos 2\theta \qquad (11.33)$$

SOLVED PROBLEMS

Problem P11.1:

Find the y co-ordinate of the centroid of a triangle of base b and altitude h as shown in Figure P11.1.

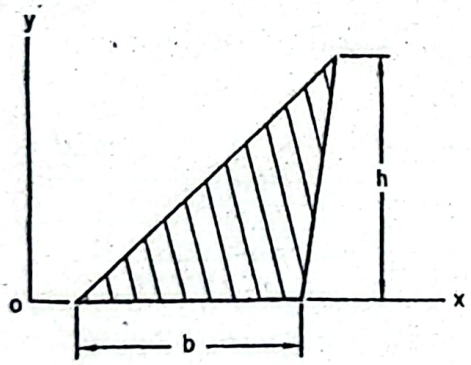

Figure P11.1

Given Data:

Base of triangle = b

Altitude of triangle = h

To Find:

- Co-ordinate of centroid, $\bar{y}$

Solution:

Here y co-ordinate of the centroid, $\bar{y} = \dfrac{\int y dA}{A}$

A horizontal differential area dA is chosen as shown in the figure below,

om the similar triangles we find, $\frac{w}{b} = \frac{h-y}{h}$

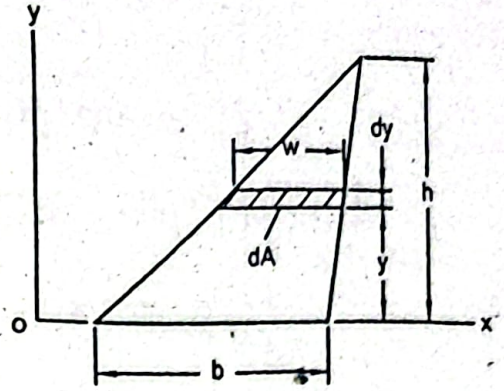

herefore, the required y co-ordinate of the centroid,

$$\bar{y} = \frac{1}{A}\int yb\frac{h-y}{h}dy$$

$$= \frac{1}{A}\int\frac{b}{h}y(h-y)dy$$

$$= \frac{1}{A}\left[\frac{b}{h}h\int_0^h ydy - \frac{b}{h}\int_0^h y^2dy\right]$$

$$= \frac{1}{A}\left[\frac{bh^2}{2} - \frac{bh^2}{3}\right]$$

$$= \frac{2}{bh}\frac{bh^2}{6} = \frac{h}{3}\ \textit{Answer}$$

Problem P11.2:
Find the co-ordinates of centroid of a quarter circle of radius r.

Given Data:
Radius of circle = r

To Find:
- Co-ordinates of centroid, $\bar{x}$ and $\bar{y}$

Solution:

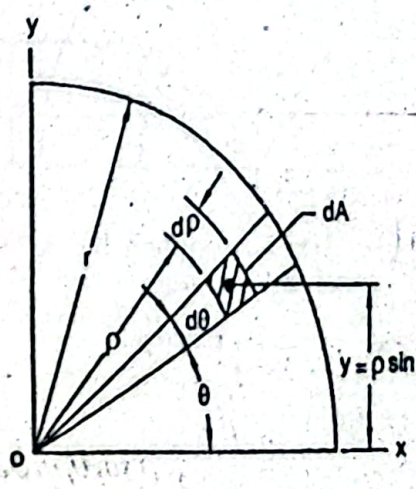

A differential area dA is considered as shown in the above figure,

$$dA = \rho d\theta d\rho$$

Here the y co-ordinate of the centroid, $\bar{y} = \int \frac{ydA}{A}$

$$= \frac{1}{A}\int_0^r \int_0^{\pi/2} \rho \sin\theta \rho d\theta d\rho$$

$$= \frac{1}{A}\int_0^r \int_0^{\pi/2} \rho^2 d\rho \sin\theta d\theta$$

$$= \frac{1}{A}\frac{r^3}{3}\int_0^{\pi/2} \sin\theta d\theta$$

$$= \frac{r^3}{3A}\left[-\cos\theta\right]_0^{\pi/2}$$

$$= \frac{r^3 4}{3\pi r^2} \quad (\text{Since } A = \frac{\pi r^2}{4})$$

$$= \frac{4r}{3\pi} \text{ Answer}$$

Similarly, due to symmetry the x co-ordinate of the centroid,

$$\bar{x} = \frac{4r}{3\pi} \text{ Answer}$$

Problem P11.3:
Find the y co-ordinate of centroid of a semicircle of radius r.

Given Data:
Radius of semicircle = r

To Find:
- Co-ordinate of centroid, $\bar{y}$

Solution:

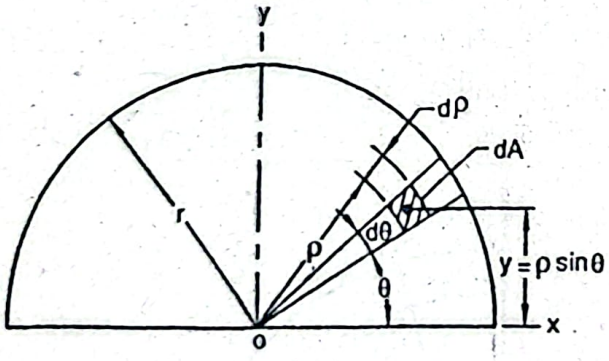

A differential area in the polar co-ordinate system has been selected as shown in the above figure and this is given by,

$$dA = \rho d\theta d\rho$$

Here the y co-ordinate of the centroid, $\bar{y} = \int \frac{ydA}{A}$

$$= \frac{1}{A}\int_0^{\pi} \int_0^{\pi} \rho \sin\theta \rho d\theta d\rho$$

$$= \frac{1}{A}\frac{r^3}{3}\int_0^{\pi} \sin\theta d\theta$$

$$= \frac{r^3}{3A}\left[-\cos\theta\right]_0^{\pi}$$

$$= \frac{2r^3}{3A} = \frac{2r^3 \times 2}{3\pi r^2} \quad \left(\text{Since } A = \frac{\pi r^2}{2}\right)$$

$$= \frac{4}{3}\frac{r}{\pi} \quad \textit{Answer}$$

Due to symmetry the x co-ordinate is, $\bar{x} = 0$

Problem P11.4:

Determine the y co-ordinate of centroid of a trapezoidal area as shown in Figure P11.4.

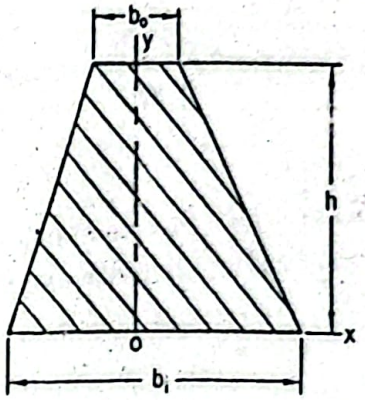

Figure P11.4

Given Data:

Altitude of trapezoid = h

Base of trapezoid = b_i

Top width = b_o

To Find:

- Co-ordinate of centroid, $\bar{y}$

Solution:

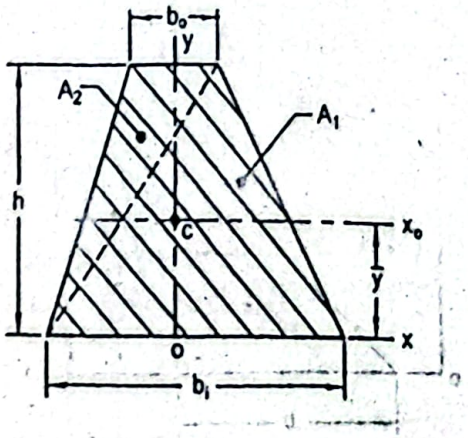

Area of the trapezoid, $A = h\dfrac{b_i + b_o}{2}$

To find the centroid of the trapezoid (Figure above),

$$\bar{y}A = \bar{y}_1 A_1 + \bar{y}_2 A_2$$

$$= \frac{h}{3} \times \frac{b_i h}{2} + \frac{2h}{3} \times \frac{b_o h}{2}$$

$$= \frac{h^2}{6}(b_i + 2b_o)$$

Therefore, the required y co-ordinate of the centroid,

$$\bar{y} = \frac{\dfrac{h^2}{6}(b_i + 2b_o)}{h\dfrac{b_i + b_o}{2}}$$

$$= \frac{1}{3} h \frac{b_i + 2b_o}{b_i + b_o}$$ *Answer*

Problem P11.5:

Determine the moments of inertia for a triangle of base b and altitude h with respect to an axis coinciding with the base and the centroidal axis parallel to the base.

Given Data:

Base of triangle = b

Altitude of triangle = h

To Find:

- Moment of inertia with respect to base, I_x
- Moment of inertia with respect to centroidal axis, $\bar{I}_x$

Solution:

A horizontal differential area is considered as shown in the figure below,

$$dA = wdy$$

From the similar triangles, we have, $\dfrac{w}{b} = \dfrac{h - y}{h}$

$$\text{or, } w = \frac{b}{h}(h - y)$$

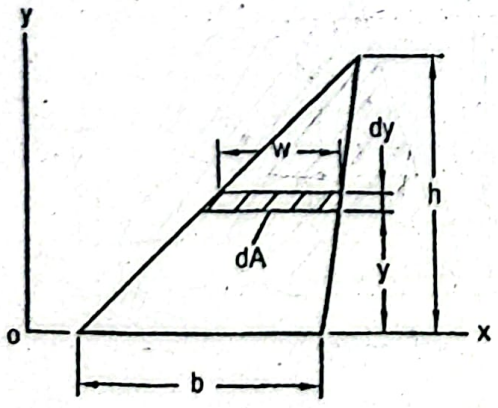

From the similar triangles, we have, $\frac{w}{b} = \frac{h-y}{h}$

$$\text{or, } w = \frac{b}{h}(h-y)$$

Area moment of inertia or second moment of area with respect to the base,

$$I_x = \int y^2 dA = \int y^2 w dy$$

$$= \int y^2 \frac{b}{h}(h-y)dy$$

$$= \frac{b}{h}\left[h\int y^2 dy - \int y^3 dy\right]_0^h$$

$$= \frac{b}{h}\left[\frac{hy^3}{3} - \frac{y^4}{4}\right]$$

$$= \frac{bh^3}{12} \quad \textit{Answer}$$

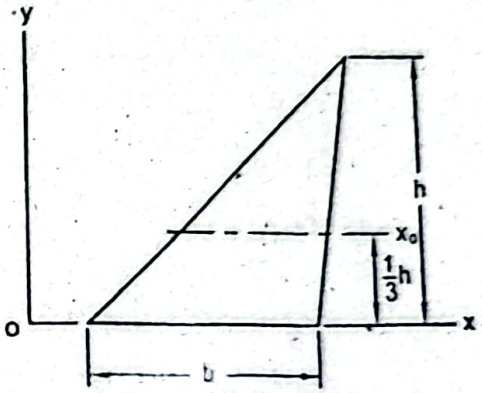

Using transfer formula the area moment of inertia about the centroidal axis x_0 (Figure above) can be determined. Moment of inertia about the centroidal axis x_0 is obtained as,

$$I_x = \bar{I}_x + Ad^2$$

$$\text{or, } \bar{I}_x = I_x - Ad^2$$

$$= \frac{bh^3}{12} - \frac{bh}{2}\left(\frac{h}{3}\right)^2$$

$$= \frac{bh^3}{36} \quad \textit{Answer}$$

Problem P11.6:

Determine the moments of inertia for a rectangle of base b and altitude h with respect to an axis coinciding with the base and the centroidal axis parallel to the base.

Given Data:

Base of rectangle = b

Altitude of rectangle = h

To Find:

- Moment of inertia with respect to base, I_x
- Moment of inertia with respect to centroidal axis, $\bar{I}_x$

Solution:

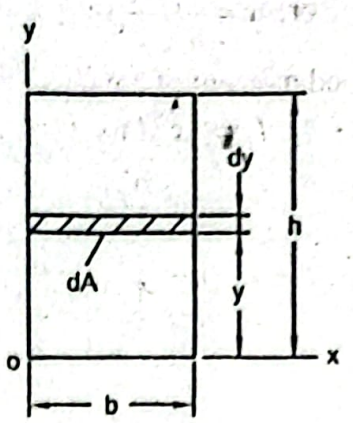

A horizontal differential area is considered as (Figure above),

$$dA = bdy$$

Area moment of inertia with respect to the base of the rectangle,

$$I_x = \int y^2 dA$$
$$= \int y^2 b dy$$
$$= b\int y^2 dy$$
$$= b\left[\frac{y^3}{3}\right]_0^h = \frac{bh^3}{3} \quad \textit{Answer}$$

Now to find the area moment of inertia with respect to the centroidal axis x_0 as shown in the figure below, transfer formula is used. Moment of inertia about the centroidal axis x_0 is obtained as,

$$I_x = \bar{I}_x + Ad^2$$
$$\text{or, } \bar{I}_x = I_x - Ad^2$$
$$= \frac{bh^3}{3} - bh\left(\frac{h}{2}\right)^2 = \frac{bh^3}{12} \quad \textit{Answer}$$

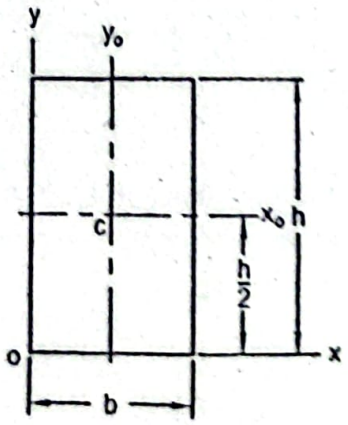

Problem P11...

Determine the moment of inertia of a circular area of radius r with respect to the diametral axis. Also determine the polar moment of inertia and radius of gyration with respect to the diametral axis.

Given Data:

Radius of circle = r

To Find:

Moment of inertia about diametral axis, $\bar{I}_x$

Polar moment of inertia, $\bar{J}$

Radius of gyration, $\bar{k}_x$

Solution:

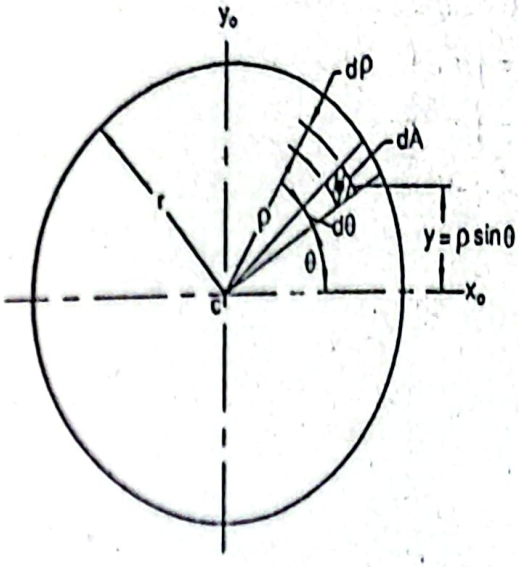

differential area (Figure above) is selected using the polar co-ordinate system and this rea,

$$dA = \rho d\theta d\rho$$

rea moment of inertia about the diametral axis x_o,

$$\bar{I}_x \equiv \int y^2 dA$$

$$= \int_0^r \int_0^{2\pi} \rho^2 \sin^2\theta \rho d\theta d\rho$$

$$= \int_0^r \int_0^{2\pi} \rho^3 d\rho \sin^2\theta d\theta$$

$$= \frac{r^4}{4} \int_0^{2\pi} \sin^2\theta d\theta$$

$$= \frac{r^4}{4} \int_0^{2\pi} \frac{1}{2}(1 - \cos 2\theta) d\theta$$

$$= \frac{r^4}{8}[\theta - \sin 2\theta]_0^{2\pi}$$

$$= \frac{\pi r^4}{4} \quad \textit{Answer}$$

Now to find the polar moment of inertia a differential area is chosen as shown in the figure below.

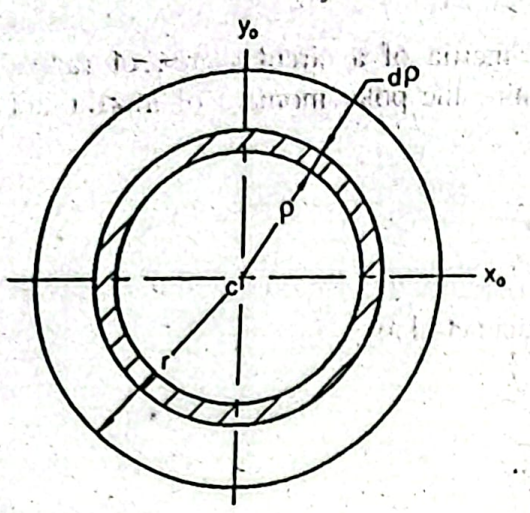

Differential area, $dA = 2\pi\rho d\rho$

Polar moment of inertia, $\bar{J} = \int \rho^2 dA$

$$= \int \rho^2 2\pi\rho d\rho$$

$$= 2\pi \int_0^r \rho^3 d\rho$$

$$= 2\pi \frac{r^4}{4}$$

$$= \frac{\pi r^4}{2} \quad \textit{Answer}$$

Alternate method:

We have, $\bar{I}_x = \dfrac{\pi r^4}{4}$

Similarly, $\bar{I}_y = \dfrac{\pi r^4}{4}$

Therefore, the required polar moment of inertia,

$$\bar{J} = \bar{I}_x + \bar{I}_y$$

$$= \frac{\pi r^4}{4} + \frac{\pi r^4}{4}$$

$$= \frac{\pi r^4}{2} \quad \textit{Answer}$$

Radius of gyration. $\bar{k}_x = \sqrt{\dfrac{\bar{I}_x}{A}} = \sqrt{\dfrac{\dfrac{\pi r^4}{4}}{\pi r^2}} = \dfrac{r}{2}$ *Answer*

Problem P11.8:

Determine the moments of inertia of a quarter circle of radius r as shown in Figure P11.8 about the x and y axes and the centroidal axes.

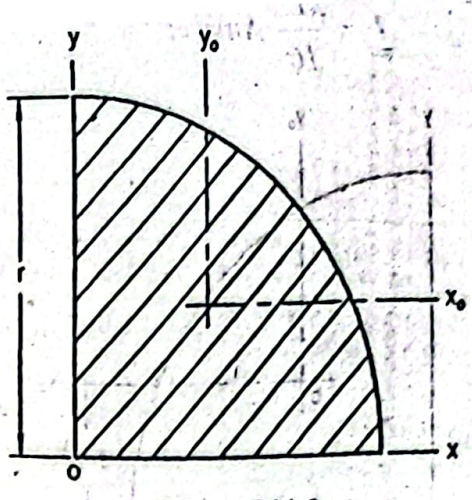

Figure P11.8

iven Data:

ndius of circle = r

Find:

Moment of inertia, I_x and I_y

Moments of inertia with respect to centroidal axis, $\bar{I}_x$ and $\bar{I}_y$

lution:

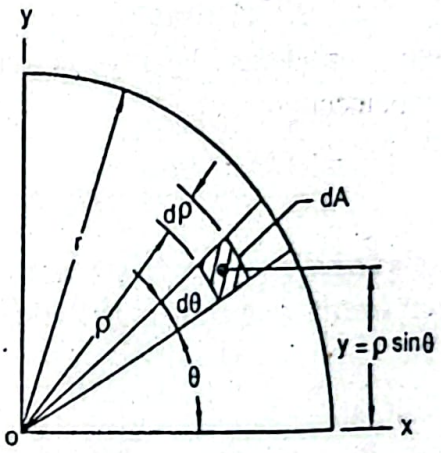

differential area dA is considered as shown in the above figure,

$$dA = \rho d\theta d\rho$$

oment of inertia with respect to the x-axis,

$$I_x = \int y^2 dA$$

$$= \int_0^r \int_0^{\pi/2} \rho^2 \sin^2\theta \rho d\theta d\rho$$

$$= \int_0^r \int_0^{\pi/2} \rho^3 d\rho \sin^2\theta d\theta$$

$$= \frac{r^4}{4} \int_0^{\pi/2} \sin^2\theta d\theta$$

$$= \frac{r^4}{8}\left[\theta - \frac{\sin 2\theta}{2}\right]_0^{\pi/2}$$

$$= \frac{\pi r^4}{16} \quad \textit{Answer}$$

Similarly due to symmetry, $I_y = \frac{\pi r^4}{16}$ *Answer*

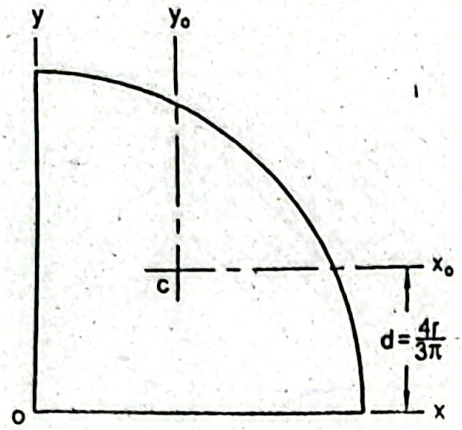

Using the transfer formula the moment of inertia with respect to the centroidal axis x_0 (Figure above) can be determined as follows,

$$I_x = \bar{I}_x + Ad^2$$

$$\text{or, } \bar{I}_x = I_x - Ad^2$$

$$= \frac{\pi r^4}{16} - \frac{\pi r^2}{4}\left(\frac{4r}{3\pi}\right)^2$$

$$= 0.055r^4 \text{ Answer}$$

Similarly, due to symmetry the moment of inertia with respect to the centroidal axis y_0 is determined as, $\bar{I}_y = 0.055r^4$ *Answer*

Problem P11.9:

Determine the moment of inertia of a semicircle of radius r with respect to the diametral axis. Also determine the moment of inertia with respect to the centroidal axis parallel to the diameter.

Given Data:

Radius of circle = r

To Find:

- Moment of inertia with respect to diametral axis, I_x
- Moment of inertia with respect to centroidal axis, $\bar{I}_x$

Solution:

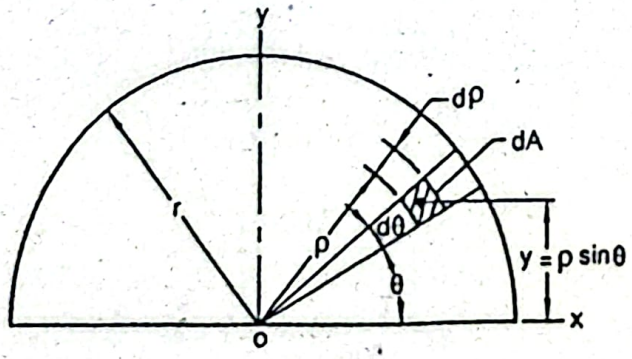

differential area dA is considered as shown in the above figure,

$$dA = \rho d\theta d\rho$$

oment of inertia with respect to the x-axis,

$$I_x = \int y^2 dA$$

$$= \int_0^r \int_0^\pi \rho^2 \sin^2\theta \rho d\theta d\rho$$

$$= \frac{r^4}{4} \int_0^\pi \sin^2\theta d\theta$$

$$= \frac{r^4}{4}\frac{1}{2} \int_0^\pi (1-\cos 2\theta) d\theta$$

$$= \frac{r^4}{8}\left[\theta - \frac{\sin 2\theta}{2}\right]_0^\pi$$

$$= \frac{\pi r^4}{8} \quad \textit{Answer}$$

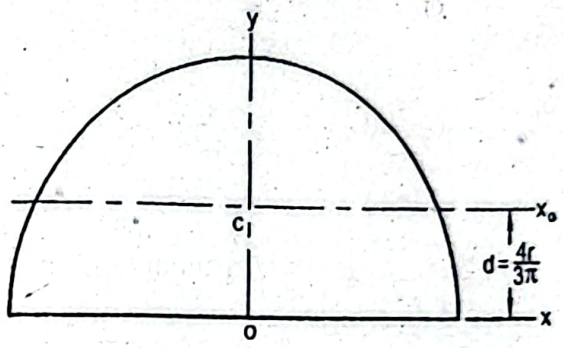

ng the transfer formula the moment of inertia about the centroidal axis x_0 (Figure ve) is obtained as follows, $I_x = \bar{I}_x + Ad^2$

$$\text{or, } \bar{I}_x = I_x - Ad^2$$

$$= \frac{\pi r^4}{8} - \frac{\pi r^2}{2} \times \left(\frac{4r}{3\pi}\right)^2$$

$$= 0.11 r^4 \quad \textit{Answer}$$

blem P11.10:

ermine the moment of inertia about the centroidal x-axis of an area enclosed by an se whose equation is $\frac{x^2}{a^2} + \frac{y^2}{b^2} = 1$. Also determine the radius of gyration about the e axis.

n Data:

ation of ellipse, $\frac{x^2}{a^2} + \frac{y^2}{b^2} = 1$

Find:

oment of inertia about centroidal x-axis, $\bar{I}_x$

- Radius of gyration about centroidal x-axis, k_x

Solution:

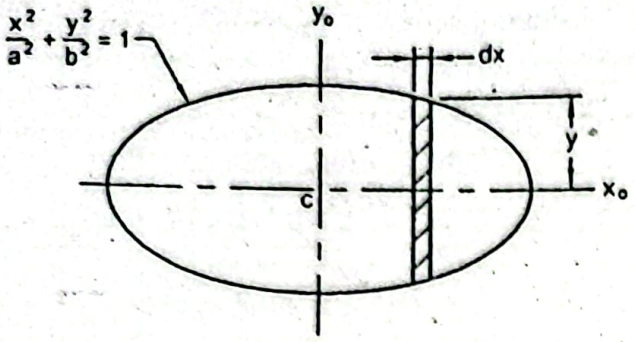

A differential element is chosen as shown in the above figure. Moment of inertia of this differential element with respect to the centroidal axis x_o,

$$d\bar{I}_x = \frac{1}{12}dx(2y)^3$$

$$\text{or, } \bar{I}_x = \frac{2}{3}\int y^3 dx$$

We have the equation of ellipse, $\frac{x^2}{a^2}+\frac{y^2}{b^2}=1$

$$\text{or, } y = \frac{b}{a}\sqrt{a^2-x^2}$$

Substituting this value of y, the moment of inertia about the centroidal axis x_o becomes,

$$\bar{I}_x = \frac{2}{3}\left(\frac{b}{a}\right)^3 \int_{-a}^{a}\left(a^2-x^2\right)^{3/2}dx \qquad (i)$$

Let $x = a\sin\theta$

When, $x=-a \quad \theta=-\pi/2$

and, $x=+a, \quad \theta=+\pi/2$

$dx = a\cos\theta d\theta$

Substituting this value in Equation (i),

$$\bar{I}_x = \frac{2}{3}\left(\frac{b}{a}\right)^3 \int_{-\pi/2}^{\pi/2}\left(a^2-a^2\sin^2\theta\right)^{3/2} a\cos\theta d\theta$$

$$= \frac{2}{3}ab^3\int_{-\pi/2}^{\pi/2}\left(\cos^2\theta\right)^{3/2}\cos\theta d\theta$$

$$= \frac{2}{3}ab^3\int_{-\pi/2}^{\pi/2}\cos^4\theta d\theta$$

$$= \frac{2}{3}ab^3\int_{-\pi/2}^{\pi/2}\left(\frac{1+\cos 2\theta}{2}\right)^2 d\theta \quad \left(\text{Since}\cos^2\theta = \frac{1+\cos 2\theta}{2}\right)$$

$$= \frac{2}{3}ab^3\frac{1}{4}\int_{-\pi/2}^{\pi/2}\left(1+2\cos 2\theta+\cos^2 2\theta\right)d\theta$$

$$= \frac{1}{6}ab^3\int_{-\pi/2}^{\pi/2}\left[1+2\cos 2\theta+\frac{1}{2}(1+\cos 4\theta)\right]d\theta$$

$$= \frac{1}{6}ab^3 \int_{-\pi/2}^{\pi/2} \left[1 + 2\cos 2\theta + \frac{1}{2} + \frac{1}{2}\cos 4\theta\right] d\theta$$

$$= \frac{1}{6}ab^3 \int_{-\pi/2}^{\pi/2} \left(1\frac{1}{2} + 2\cos 2\theta + \frac{1}{2}\cos 4\theta\right) d\theta$$

$$= \frac{1}{6}ab^3 \left[\frac{3}{2}\theta + \frac{2}{2}\sin 2\theta + \frac{1}{8}\sin 4\theta\right]_{-\pi/2}^{\pi/2}$$

$$= \frac{1}{6}ab^3 \frac{3}{2}\left(\frac{\pi}{2} + \frac{\pi}{2}\right) = \frac{\pi}{4}ab^3 \text{ Answer}$$

Area of the ellipse, $A = \int 2y dx$

$$= 2\int \frac{b}{a}\sqrt{a^2 - x^2}\, dx \quad \text{let, } x = a\sin\theta$$

$$= 2\frac{b}{a}\int_{-\pi/2}^{\pi/2} \sqrt{\left(a^2 - a^2\sin^2\theta\right)} a\cos\theta d\theta$$

$$= 2\frac{b}{a}a^2 \int_{-\pi/2}^{\pi/2} \cos^2\theta d\theta$$

$$= 2ab\int_{-\pi/2}^{\pi/2} \frac{1}{2}(1 + \cos 2\theta) d\theta$$

$$= ab\left[\theta + \frac{\sin 2\theta}{2}\right]_{-\pi/2}^{\pi/2}$$

$$= \pi ab$$

herefore, radius of gyration about the centroidal axis x_0 ,

$$\bar{k}_x = \sqrt{\frac{\bar{I}_x}{A}} = \sqrt{\frac{\frac{\pi}{4}ab^3}{\pi ab}} = \frac{b}{2} \text{ Answer}$$

oblem P11.11:

rectangle of size $400mm \times 300mm$ is inclined with the horizontal axis at an angle of ^{0} as shown in Figure P11.11. Determine the moment of inertia about the x-axis.

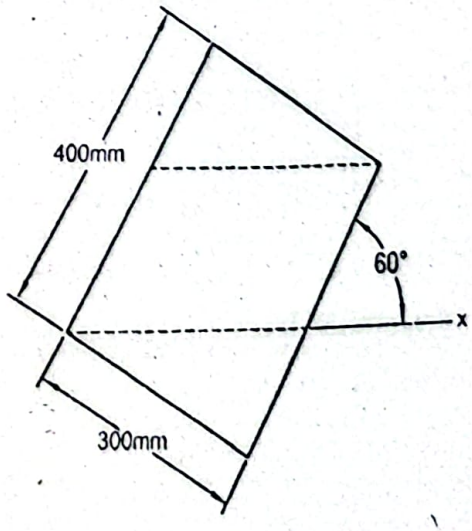

Figure P11.11

Size of rectangle = $400mm \times 300mm$

Angle of inclination = 60^0

To Find:

- Moment of inertia about x-axis, I_x

Solution:

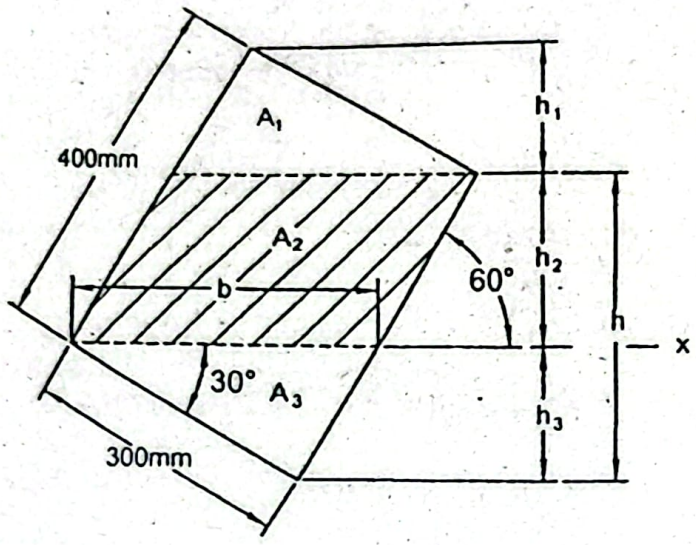

Different vertical and horizontal dimensions as shown in the above figure are as follows

$$h = 400 \sin 60^0 mm = 346.41mm$$

$$h_3 = 300 \sin 30^0 mm = 150mm$$

$$h_1 = h_3 = 150mm \quad \text{(For symmetry)}$$

$$b \cos 30^0 = 300$$

or, $$b = 346.41mm$$

$$h_2 = h - h_3 = (346.41 - 150)mm = 196.41mm$$

Moment of inertia about the x-axis,

$$I_x = \left(\bar{I}_{x_1} + A_1 d_1^2\right) + I_{x_2} + \left(I_{x_3} + A_3 d_3^2\right)$$

$$= \left[\frac{1}{36} \times 346.41 \times 150^3 + \frac{1}{2} \times 346.41 \times 150 \times \left(196.41 + \frac{150}{3}\right)^2\right] +$$

$$\frac{1}{3} \times 346.41 \times 196.41^3 + \left[\frac{1}{36} \times 346.41 \times 150^3 + \frac{1}{2} \times 346.41 \times 150 \times \left(\frac{150}{3}\right)^2\right]$$

$$= 2582303116mm^4 = 25.82 \times 10^8 mm^4 \quad \textbf{Answer}$$

Problem P11.12:

Determine the moment of inertia and radius of gyration of a T-section as shown in Figure P11.12 with respect to the centroidal axis.

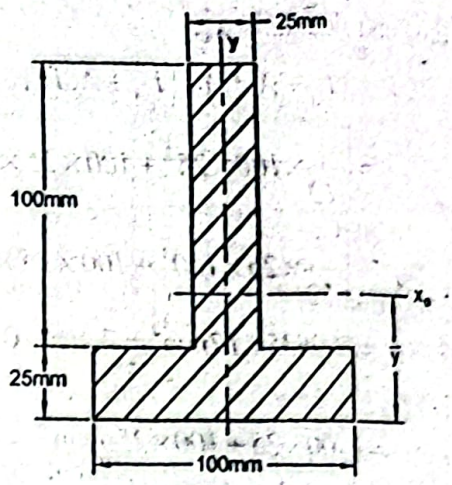

Figure P11.12

Given Data:

Base = *100mm*

Top width = *25mm*

Altitude = *125mm*

Thickness = *25mm*

To Find:

- Moment of inertia with respect to centroidal *x*- axis, $\bar{I}_x$
- Radius of gyration with respect to centroidal *x*-axis, $\bar{k}_x$

Solution:

Whole area consists of the areas A_1 and A_2 (Figure below).

We have the relation for the composite area,

$$\bar{y}A = \sum yA$$

$$\text{or, } \bar{y}(A_1 + A_2) = \bar{y}_1 A_1 + \bar{y}_2 A_2$$

$$\text{or, } \bar{y}(100\times 25 + 100\times 25) = 12.5\times 100\times 25 + 75\times 100\times 25$$

$$\text{or, } \bar{y} = 43.75mm$$

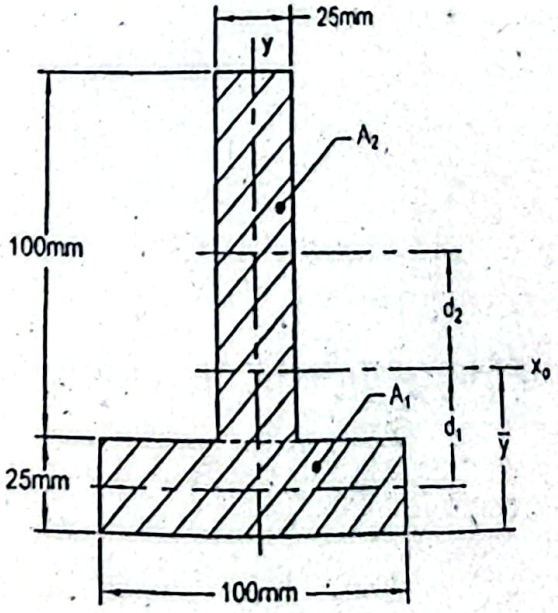

Moment of inertia about the centroidal axis x_o,

$$\bar{I}_x = \left(\bar{I}_{x_1} + A_1 d_1^2\right) + \left(\bar{I}_{x_2} + A_2 d_2^2\right)$$

$$= \left[\frac{1}{12} \times 100 \times 25^3 + 100 \times 25 \times (43.75 - 12.5)^2\right] +$$

$$\left[\frac{1}{12} \times 25 \times 100^3 + 100 \times 25 \times (75 - 43.75)^2\right]$$

$$= 7096354.17 mm^4 = 7.10 \times 10^6 mm^4 \quad \textbf{Answer}$$

Whole area, $A = A_1 + A_2$

$$= (100 \times 25 + 100 \times 25) mm^2 = 5000 mm^2$$

Therefore, the radius of gyration about the centroidal axis x_o,

$$\bar{k}_x = \sqrt{\frac{\bar{I}_x}{A}} = \sqrt{\frac{7096354.17}{5000}} \, mm = 37.67 mm \quad \textbf{Answer}$$

Problem P11.13:

Determine the moments of inertia of an *I*-section as shown in Figure P11.13 about the centroidal *x* and *y* axes. Also determine the radius of gyration about the same axes.

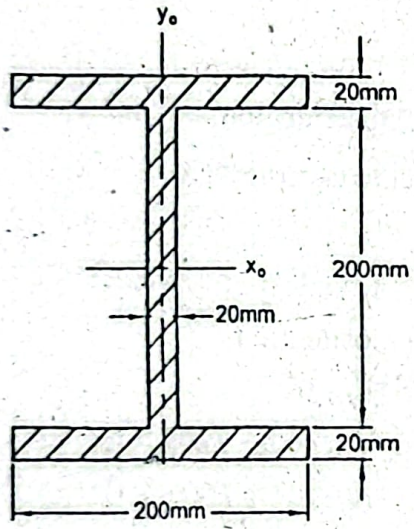

Figure P11.13

Given Data:

Base = *200mm*

Altitude = *240mm*

Thickness = *20mm*

To Find:

- Moments of inertia about centroidal axes, $\bar{I}_x$ and $\bar{I}_y$
- Radii of gyration about centroidal axes, $\bar{k}_x$ and $\bar{k}_y$

Solution:

Moment of inertia about the centroidal axis x_0,

$$I_x = \frac{1}{12}\times 200\times 240^3 - \frac{1}{12}\times 180\times 200^3 = 11.04\times 10^7\ mm^4 \text{ Answer}$$

ment of inertia about the centroidal axis y_0,

$$\bar{I}_y = 2\times\frac{1}{12}\times 20\times 200^3 + \frac{1}{12}\times 200\times 20^3$$

$$= 2.68\times 10^7\ mm^4 \text{ Answer}$$

$$A = (200\times 20 + 200\times 20 + 200\times 20)mm^2 = 12000mm^2$$

refore, the radius of gyration about the centroidal axis x_0,

$$\bar{k}_x = \sqrt{\frac{\bar{I}_x}{A}} = \sqrt{\frac{11.04\times 10^7}{12000}}\ mm = 95.92mm \text{ Answer}$$

the radius of gyration about the centroidal axis y_0,

$$\bar{k}_y = \sqrt{\frac{\bar{I}_y}{A}} = \sqrt{\frac{2.68\times 10^7}{12000}}\ mm = 47.26mm \text{ Answer}$$

blem P11.14:

ction as shown in Figure P11.14 consists of two $200mm\times 25mm$ flange plates and $200mm\times 25mm$ web plates. Determine the centroidal moments of inertia for this on.

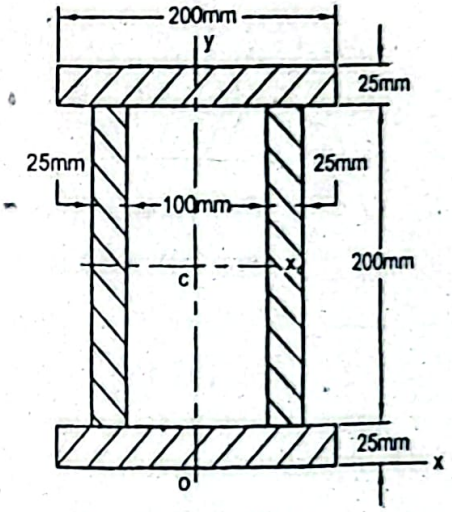

Figure P11.14

en Data:

: of flange plates = $200mm\times 25mm$

: of web plates = $200mm\times 25mm$

Find:

oments of inertia about centroidal axes, $\bar{I}_x$ and $\bar{I}_y$

ution:

ment of inertia about the centroidal axis x_0 (Figure below),

$$\bar{I}_x = \left(\frac{1}{12}\times 200\times 250^3 - \frac{1}{12}\times 150\times 200^3\right)mm^4$$

$$= 160416666.7mm^4 = 16.04\times 10^7\ mm^4 \text{ Answer}$$

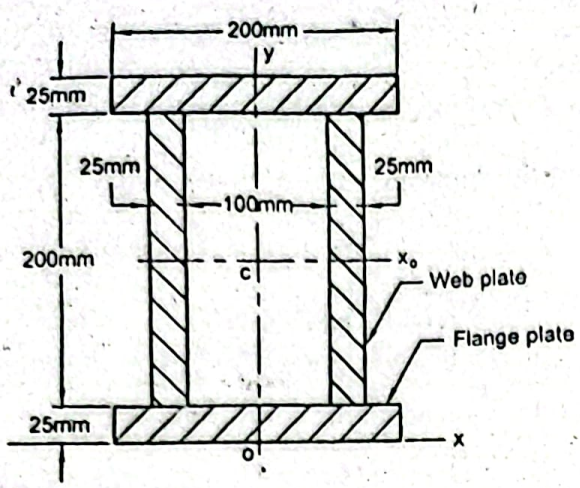

Moment of inertia about the centroidal axis y_0,

$$\bar{I}_y = 2\left[\frac{1}{12}\times 25\times 200^3\right] + \frac{1}{12}\times 200\times 150^3 - \frac{1}{12}\times 200\times 100^3$$

$$= 72916666.67 mm^4 = 72.92\times 10^6\ mm^4 \quad \textit{Answer}$$

Problem P11.15:

Determine the moment of inertia about the centroidal x-axis of a triangular section w circular hole as shown in Figure P11.15.

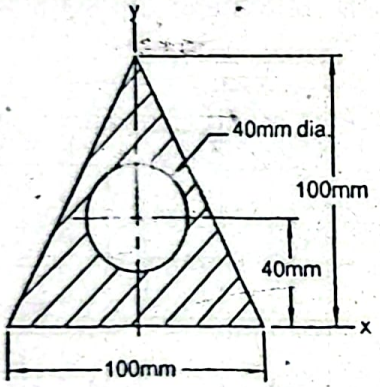

Figure P11.15

Given Data:

Base of triangle = 100mm

Altitude of triangle = 100mm

Diameter of circle = 40mm

To Find:

- Moment of inertia about centroidal x-axis, $\bar{I}_x$

Solution:

To find the y co-ordinate of the centroid (Figure below),

$$\bar{y}\times A = \bar{y}_1 A_1 - \bar{Y}_2 A_2$$

$$\text{or, } \bar{y}\left[\frac{1}{2}\times 100\times 100 - \frac{\pi\times 40^2}{4}\right] = \frac{100}{3}\times\frac{1}{2}\times 100\times 100 - 40\times\frac{\pi\times 4}{4}$$

$$\text{or, } \bar{y} = 31.10mm$$

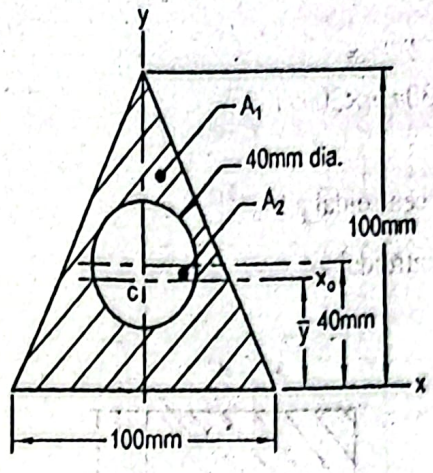

the transfer formula, the moment of inertia about the centroidal axis x_o as shown in ure above,

$$\bar{I}_x = \left(\bar{I}_{x1} + A_1 d_1^2\right) - \left(\bar{I}_{x2} + A_2 d_2^2\right)$$

$$= \left[\frac{1}{36} \times 100 \times 100^3 + \frac{1}{2} \times 100 \times 100 \times \left(\frac{100}{3} - 31.10\right)^2\right] -$$

$$\left[\frac{\pi \times 40^4}{64} + \frac{\pi \times 40^2}{4} \times (40 - 31.10)^2\right]$$

$$= 2577514.74 mm^4$$

$$= 2.58 \times 10^6 \, mm^4 \; Answer$$

m P11.16:

ne moments of inertia about the centroidal axes of a rectangular section with a ular hole as shown in Figure P11.16. Also determine the radius of gyration about troidal axes.

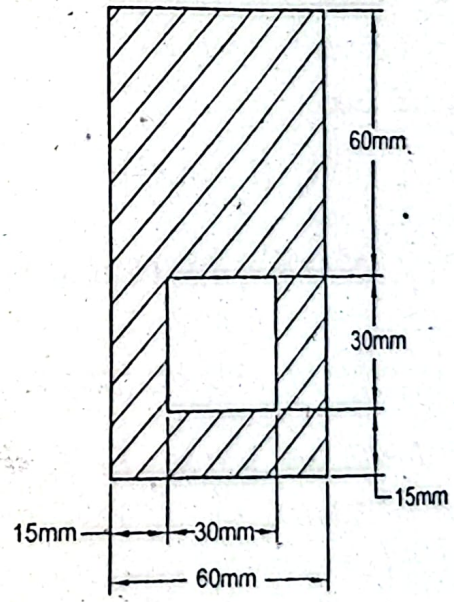

Figure P11.16

Data:

rectangle = *60mm*

Altitude of rectangle = *105 mm*

Size of rectangular hole = *30mm×30mm*

To Find:

- Moments of inertia about centroidal axes, $\bar{I}_x$ and $\bar{I}_y$
- Radii of gyration about centroidal axes, $\bar{k}_x$ and $\bar{k}_y$

Solution:

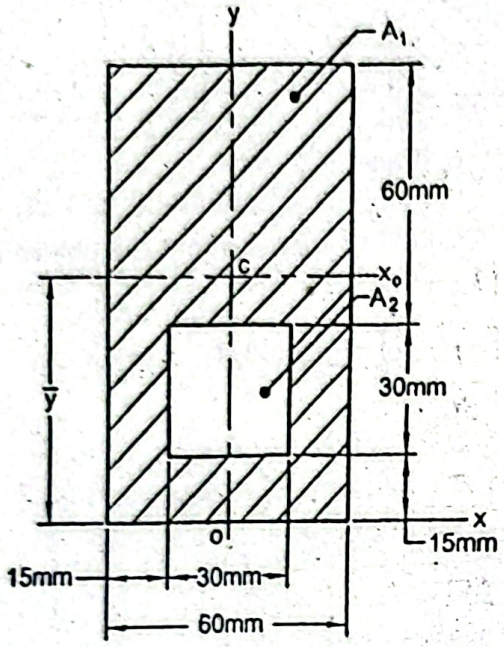

Whole area (Figure above), $A = A_1 - A_2$

$$= (105\times60 - 30\times30)\,mm^2 = 5400mm^2$$

To find the y co-ordinate of the centroid,

$$\bar{y}\times A = \bar{y}_1 A_1 - \bar{Y}_2 A_2$$

or, $\bar{y}A = 52.5\times105\times60 - 30\times30\times30$

or, $\bar{y}\times5400 = 303750$

or, $\bar{y} = 56.25mm$

Moment of inertia about the centroidal axis x_0,

$$\bar{I}_x = \left(\bar{I}_{x1} + A_1 d_1^2\right) - \left(\bar{I}_{x2} + A_2 d_2^2\right)$$

$$= \left[\frac{1}{12}\times60\times105^3 + 105\times60\times(56.25-52.5)^2\right] -$$

$$\left[\frac{1}{12}\times30\times30^3 + 30\times30\times(56.25-30)^2\right]$$

$$= 5189062.5mm^4 = 51.89\times10^5\,mm^4$$ ***Answer***

Moment of inertia about the centroidal axis y_o,

$$\bar{I}_y = \bar{I}_{y1} - \bar{I}_{y2}$$

$$= \frac{1}{12}\times105\times60^3 - \frac{1}{12}\times30\times30^3$$

$$= 1822500 mm^4 = 18.23 \times 10^5 mm^4 \text{ Answer}$$

Therefore, the radius of gyration with respect to the centroidal axis x_0,

$$\bar{k}_x = \sqrt{\frac{\bar{I}_x}{A}}$$

$$= \sqrt{\frac{5189062.5}{5400}} mm = 31.00 mm \text{ Answer}$$

nd the radius of gyration with respect to the centroidal axis y_0,

$$\bar{k}_y = \sqrt{\frac{\bar{I}_y}{A}}$$

$$= \sqrt{\frac{1822500}{5400}} mm = 18.37 mm \text{ Answer}$$

roblem P11.17:

how that the moment of inertia and polar moment of inertia of a thin walled cylinder are ual to $\pi R^3 t$ and $2\pi R^3 t$ respectively, where R is the radius and t is the thickness of e cylinder.

iven Data:

adius of cylinder = R

'all thickness of cylinder = t

Find:

To prove that moment of inertia of cylinder, $I = \pi R^3 t$

To prove that polar moment of inertia of cylinder, $J = 2\pi R^3 t$

lution:

utside radius of cylinder = R

hen the inside radius of cylinder = $(R - t)$

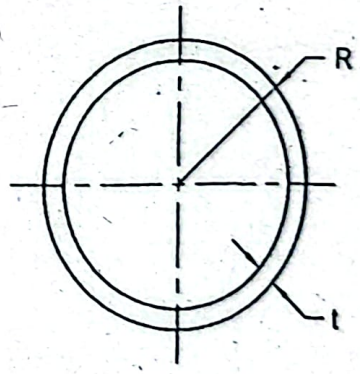

erefore, the moment of inertia of the cross-sectional area of the cylinder about the metral axis,

$$I = \frac{\pi}{4}\left[R^4 - (R-t)^4\right]$$

$$= \frac{\pi}{4}\left[R^4 - \left(R^4 - 4R^3 t + 6R^2 t^2 - 4Rt^3 + t^4\right)\right]$$

$$= \frac{\pi}{4}\left[4R^3t - 6R^2t^2 + 4Rt^3 - t^4\right]$$

$$= \frac{\pi R^4}{4}\left[4\left(\frac{t}{R}\right) - 6\left(\frac{t}{R}\right)^2 + 4\left(\frac{t}{R}\right)^3 - \left(\frac{t}{R}\right)^4\right]$$

Neglecting the squares and higher powers of the term t / R we find,

$$I = \frac{\pi R^4}{4} 4\left(\frac{t}{R}\right)$$

or, $I = \pi R^3 t$ *Proved*

The polar moment of inertia is the sum of the rectangular moments of inertia. Due to symmetry for the cross-section of a thin-walled cylinder the rectangular moments of inertia are equal. Therefore, the required polar moment of inertia,

$$J = I + I = 2I$$

$$= 2\pi R^3 t \text{ Proved}$$

Problem P11.18:

Determine the moment of inertia and radius of gyration of a channel section as shown in Figure P11.18 about the centroidal axis x_o.

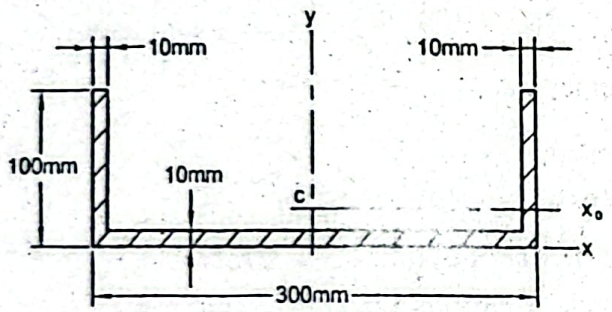

Figure P11.18

Given Data:

Base = *300mm*

Altitude = *100mm*

Thickness = *10mm*

To Find:

- Moment of inertia about centroidal axis x_o, $\bar{I}_x$
- Radius of gyration about centroidal axis x_o, $\bar{k}_x$

Solution:

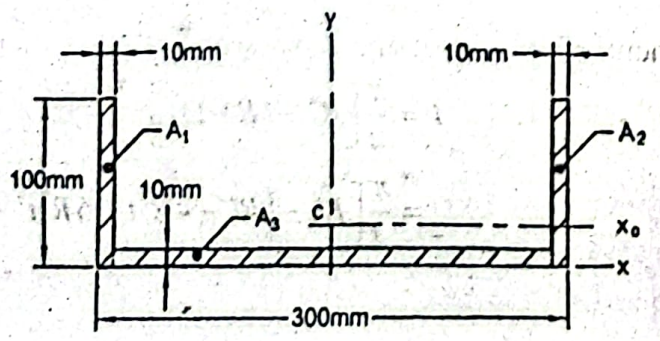

ole area (Figure above), $A = A_1 + A_2 + A_3$

$$= (100\times10+100\times10+280\times10)mm^2 = 4800mm^2$$

find the centroid of the channel section,

$$\bar{y}A = \bar{y}_1A_1 + \bar{y}_2A_2 + \bar{y}_3A_3$$

$$\text{or, } \bar{y}\times4800 = 50\times100\times10+50\times100\times10+5\times280\times10$$

$$\text{or, } \bar{y} = 23.75mm$$

ment of inertia about the centroidal axis x_0,

$$\bar{I}_x = \left(\bar{I}_{x_1} + A_1d_1^2\right)+\left(\bar{I}_{x_2} + A_2d_2^2\right)+\left(\bar{I}_{x_3} + A_3d_3^2\right)$$

$$= \left[\frac{1}{12}\times10\times100^3 + 100\times10\times(50-23.75)^2\right]+$$

$$\left[\frac{1}{12}\times10\times100^3 + 100\times10\times(50-23.75)^2\right]+$$

$$\left[\frac{1}{12}\times280\times10^3 + 280\times10\times(23.75-5)^2\right]$$

$$= 4052500mm^4 = 4.05\times10^6\ mm^4 \textit{ Answer}$$

lius of gyration about the centroidal axis x_0,

$$\bar{k}_x = \sqrt{\frac{\bar{I}_x}{A}} = \sqrt{\frac{4052500}{4800}}\ mm = 29.06mm \textit{ Answer}$$

oblem P11.19:

termine the moment of inertia and the radius of gyration of a section as shown in ;ure P11.19 about the centroidal x-axis.

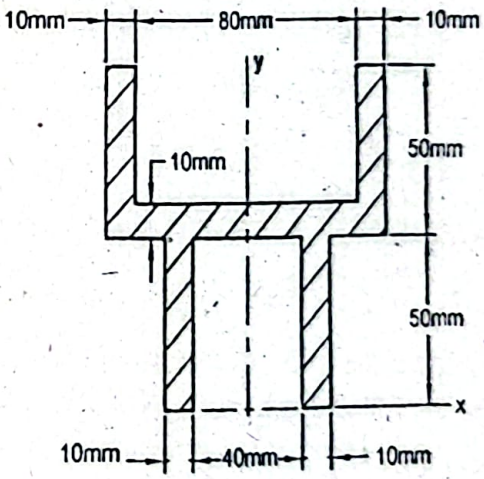

Figure P11.19

ven Data:

titude = *100mm*

ickness = *10mm*

Find:

Moment of inertia about centroidal x-axis, $\bar{I}_x$

Solution:

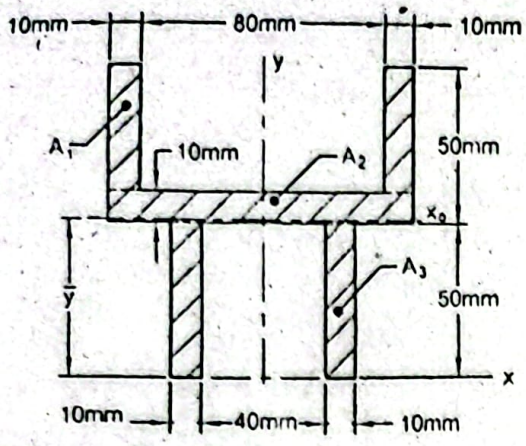

Whole area as shown in the figure above,

$$A = 2A_1 + A_2 + 2A_3$$

$$= \left[2\times(40\times10)+(100\times10)+2\times(50\times10)\right]mm^2$$

$$= 2800mm^2$$

To find the y co-ordinate of the centroid,

$$\bar{y}A = 2\bar{y}_1A_1 + \bar{y}_2A_2 + 2\bar{y}_3A_3$$

or, $\bar{y}\times2800 = 2\times80\times(40\times10)+55\times(100\times10)+2\times25\times(50\times10)$

or, $\bar{y} = 51.43mm$

Moment of inertia about the centroidal axis x_0,

$$\bar{I}_x = 2\left(\bar{I}_{x_1} + A_1d_1^2\right)+\left(\bar{I}_{x_2} + A_2d_2^2\right)+2\left(\bar{I}_{x_3} + A_3d_3^2\right)$$

$$= 2\left[\frac{1}{12}\times10\times40^3 + 40\times10\times(80-51.43)^2\right]+$$

$$\left[\frac{1}{12}\times100\times10^3 + 100\times10\times(55-51.43)^2\right]+$$

$$2\left[\frac{1}{12}\times10\times50^3 + 50\quad\times(51.43-25)^2\right]$$

$$= 1687619.05mm^4 = 16.88\times10^5\,mm^4 \quad \textit{Answer}$$

Problem P11.20:

Determine the moment of inertia of the shaded area as shown in Figure P11.20 with respect to the centroidal axis parallel to the diametral axis. Also determine the radius of gyration about the same axis.

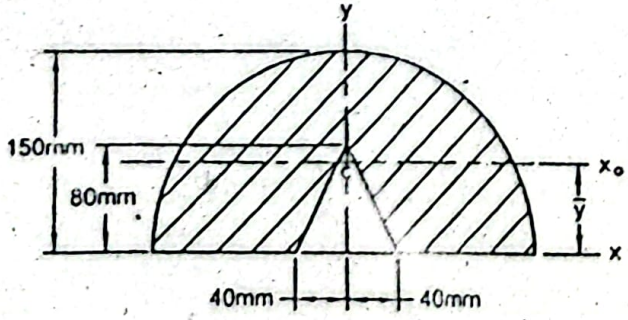

Figure P11.20

ven Data:

lius, $r = 150mm$

itude of triangular slot, $h = 80mm$

e of triangular slot, $b = 80\ mm$

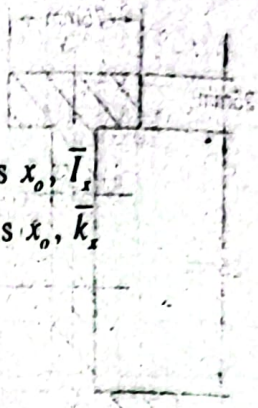

Find:

oment of inertia about centroidal axis x_o, $\bar{I}_x$

dius of gyration about centroidal axis x_o, $\bar{k}_x$

ution:

A_1 = area of the semicircle

A_2 = area of the triangular slot

n the whole area, $A = A_1 - A_2$

$$= \frac{\pi r^2}{2} - \frac{bh}{2}$$

$$= \frac{\pi (150)^2}{2} - \frac{80 \times 80}{2}$$

$$= 32142.92mm^2$$

ient of inertia about the x-axis; $I_x = \frac{\pi r^4}{8} - \frac{bh^3}{12}$

$$= \frac{\pi \times 150^4}{8} - \frac{80 \times 80^3}{12}$$

$$= 195390576.8mm^4$$

to find the centroid of the area, $\bar{y}A = \bar{y}_1 A_1 - \bar{y}_2 A_2$

$$\text{or, } \bar{y}A = \frac{4r}{3\pi} \times \frac{\pi r^2}{2} - \frac{h}{3} \times \frac{bh}{2}$$

$$\text{or, } \bar{y} \times 32142.92 = \frac{4 \times 150^3}{6} - \frac{80 \times 80^2}{6}$$

$$\text{or, } \bar{y} = 67.35mm$$

; the transfer formula we find the moment of inertia about the centroidal axis x_o as,

$$I_x = \bar{I}_x + Ad^2$$

$$\text{or, } \bar{I}_x = I_x - Ad^2$$

$$= 195390576.8 - 32142.92 \times 67.35^2$$

$$= 49.59 \times 10^6\ mm^4 \text{ Answer}$$

fore, the radius of gyration about the centroidal axis x_0,

$$\bar{k}_x = \sqrt{\frac{\bar{I}_x}{A}} = \sqrt{\frac{49.59 \times 10^6}{32142.92}} mm$$

$$= 39.28mm \text{ Answer}$$

Problem P11.21:

Determine the moment of inertia and the radius of gyration of an *I*-section as shown in Figure P11.21 with respect to a horizontal axis passing through the centroid.

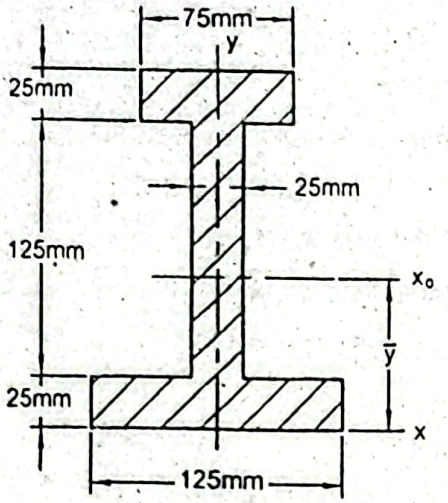

Figure P11.21

Given Data:

Base = 125mm

Altitude = *175mm*

Top width = *75 mm*

Thickness = *25mm*

To Find:

- Moment of inertia about centroidal axis x_o, $\bar{I}_x$

- Radius of gyration about centroidal axis x_o, $\bar{k}_x$

Solution:

Total area as shown in the figure below,

$$A = A_1 + A_2 + A_3$$

$$= (125\times25 + 125\times25 + 75\times25)\,mm^2 = 8125mm^2$$

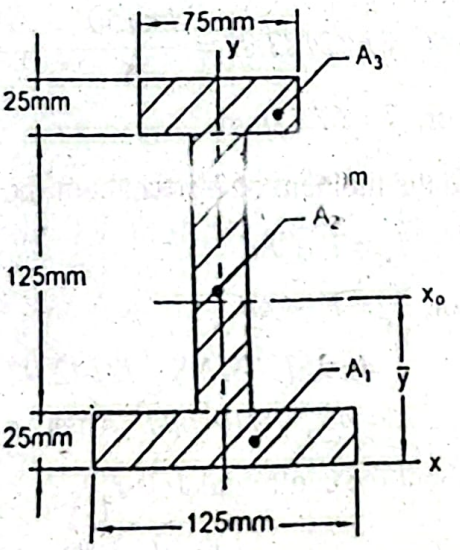

To find the *y* co-ordinate of the centroid,

$$\bar{y}A = \bar{y}_1 A_1 + \bar{y}_2 A_2 + \bar{y}_3 A_3$$

or, $\bar{y}(8125) = (12.5\times125\times25 + 87.5\times125\times25 + 162.5\times75\times25)$

or, $\bar{y} = 75.96mm$

ment of inertia about the centroidal axis x_0,

$$\bar{I}_x = \left(\bar{I}_{x_1} + A_1 d_1^2\right) + \left(\bar{I}_{x_2} + A_2 d_2^2\right) + \left(\bar{I}_{x_3} + A_3 d_3^2\right)$$

$$= \left[\frac{1}{12}\times125\times25^3 + 125\times25\times(75.96-12.5)^2\right] +$$

$$\left[\frac{1}{12}\times25\times125^3 + 125\times25\times(87.5-75.96)^2\right] +$$

$$\left[\frac{1}{12}\times75\times25^3 + 75\times25\times(162.5-75.96)^2\right]$$

$$= 31372696.33mm^4 = 31.37\times10^6\, mm^4 \textbf{ Answer}$$

refore, the radius of gyration about the centroidal axis x_0,

$$\bar{k}_x = \sqrt{\frac{\bar{I}_x}{A}} = \sqrt{\frac{31372696.33}{8125}}\, mm = 62.14mm \textbf{ Answer}$$

blem P11.22:

rmine the moment of inertia of the shaded area as shown in Figure P11.22 about the roidal axis parallel to the diametral axis.

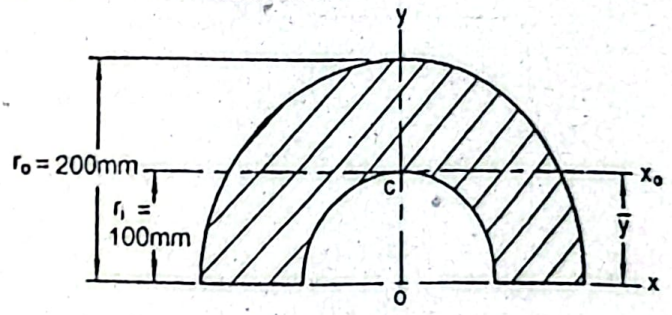

Figure P11.22

n Data:

side radius, $r_o = 200mm$

le radius, $r_i = 100mm$

Find:

oment of inertia about centroidal axis x_o, $\bar{I}_x$

tion:

led area (Figure below), $A = A_1 - A_2$

$$= \frac{\pi r_o^2}{2} - \frac{\pi r_i^2}{2}$$

$$= \frac{\pi}{2}\left(r_o^2 - r_i^2\right)$$

$$= \frac{\pi}{2}\left(200^2 - 100^2\right) mm^2$$

$$= 47123.89 mm^2$$

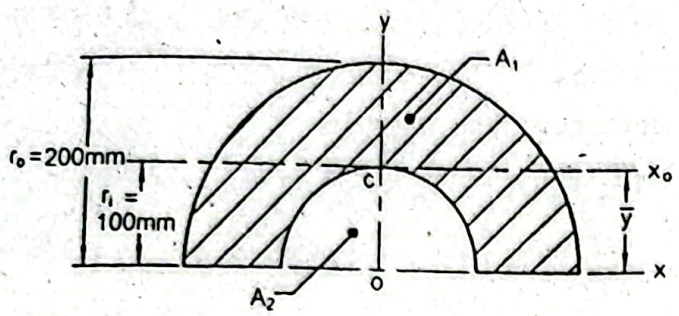

Shaded area (Figure above), $A = A_1 - A_2$

$$= \frac{\pi r_o^2}{2} - \frac{\pi r_i^2}{2}$$

$$= \frac{\pi}{2}\left(r_o^2 - r_i^2\right)$$

$$= \frac{\pi}{2}\left(200^2 - 100^2\right) mm^2$$

$$= 47123.89 mm^2$$

To find the y co-ordinate of the centroid,

$$\bar{y}A = \bar{y}_1 A_1 - \bar{y}_2 A_2$$

$$\text{or, } \bar{y}A = \frac{4r_o}{3\pi} \times \frac{\pi r_o^2}{2} - \frac{4r_i}{3\pi} \times \frac{\pi r_i^2}{2}$$

$$= \frac{2}{3}\left(r_o^3 - r_i^3\right)$$

$$\text{or, } \bar{y} \times 47123.89 = \frac{2}{3}\left(200^3 - 100^3\right)$$

$$\text{or, } \bar{y} = 99.03 mm$$

Moment of inertia about the x-axis, $I_x = \frac{\pi r_o^4}{8} - \frac{\pi r_i^4}{8}$

$$= \frac{\pi}{8}\left(r_o^4 - r_i^4\right)$$

$$= \frac{\pi}{8}\left(200^4 - 100^4\right) mm^4$$

$$= 589048622.6 mm^4$$

Using the transfer formula the moment of inertia about the centroidal axis x_0,

$$\bar{I}_x = I_x - Ad^2$$

$$= \left(589048622.6 - 47123.89 \times 99.03^2\right) mm^4 \text{ (Since } d = \bar{y} = 99.03 m$$

$$= 12.69 \times 10^7 mm^4 \text{ Answer}$$

blem P11.23

ermine the moment of inertia about the centroidal x-axis of a trapezoidal section with rcular hole as shown in Figure P11.23. Also determine the radius of gyration with ect to the same axis.

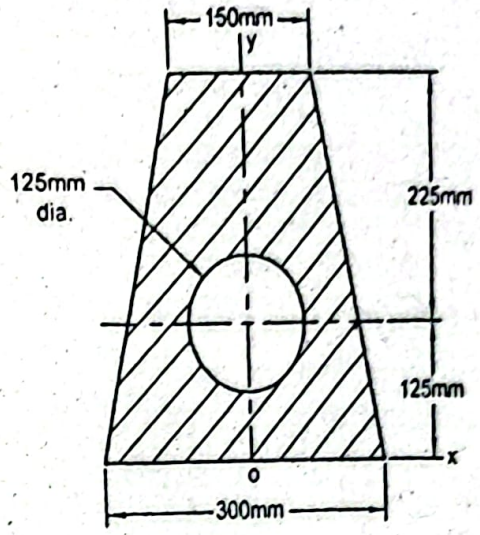

Figure P11.23

ven Data:

ıse, $b_i = 300mm$

ıp width, $b_o = 150mm$

ıtitude, $h = 350mm$

iameter of hole, $d = 125mm$

o Find:

Moment of inertia about centroidal x-axis, $\bar{I}_x$

Radius of gyration about centroidal x-axis, $\bar{k}_x$

olution:

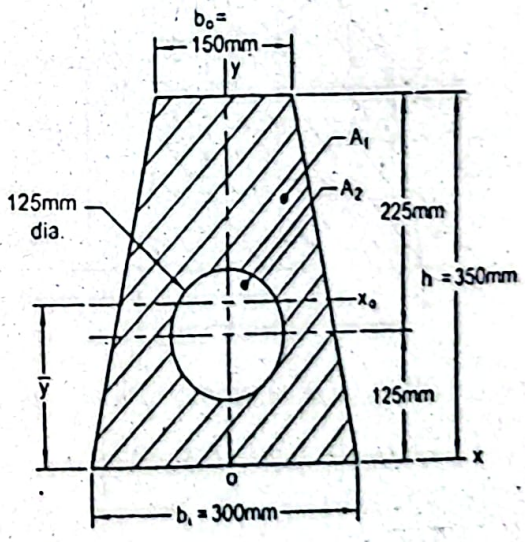

Whole area (Figure above), $A = A_1 - A_2$

$$A_1 = h \times \frac{b_i + b_o}{2} = 350 \times \frac{300 + 150}{2} mm^2 = 78750mm^2$$

$$A_2 = \frac{\pi \times 125^2}{4} mm^2 = 12271.85 mm^2$$

Substituting these values, $A = (78750 - 12271.85) mm^2 = 66478 mm^2$

To find the y co-ordinate of the centroid,

$$\bar{y}A = \bar{y}_1 A_1 - \bar{y}_2 A_2$$

Centroid of the trapezoidal area excluding the hole,

$$\bar{y}_1 = \frac{h}{3}\frac{b_i + 2b_o}{b_i + b_o} = \frac{350}{3} \times \frac{300 + 2 \times 150}{300 + 150} mm = 155.56 mm$$

Therefore, $\bar{y} \times 66478.15 = 155.56 \times 78750 - 125 \times 12271.85$

or, $\bar{y} = 161.20 mm$

Moment of inertia about the centroidal axis x_0,

$$\bar{I}_x = \left(\bar{I}_{x1} + A_1 d_1^2\right) - \left(\bar{I}_{x2} + A_2 d_2^2\right)$$

Moment of inertia of the trapezoidal area about the centroidal axis x_0 without the hole a shown in the figure below,

$$\bar{I}_{x1} = \frac{1}{12} \times 150 \times 350^3 + 350 \times 150 \times (175 - 155.56)^2 +$$

$$2 \times \left[\frac{75 \times 350^3}{36} + \frac{1}{2} \times 75 \times 350 \times (155.56 - 116.67)^2\right]$$

$$= 774125140 mm^4$$

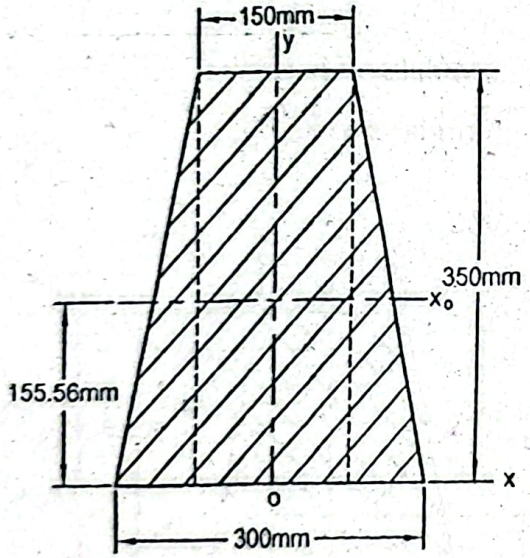

Therefore. the required moment of inertia about the centroidal axis x_0,

$$\bar{I}_x = \left[774125140 + 78750 \times (161.20 - 155.56)^2\right]$$

$$- \left[\frac{\pi \times 125^4}{64} + 1227185 \times (161.20 - 125)^2\right]$$

$$= 748564398 mm^4$$

$$= 74.86 \times 10^7 mm^4 \text{ Answer}$$

and the radius of gyration about the centroidal axis x_0,

$$k_x = \sqrt{A}$$

$$= \sqrt{\frac{748564398}{66478.15}}\ mm$$

$$= 106.12mm \quad \textit{Answer}$$

blem P11.24:

, flange plates of $350mm \times 25mm$ size are welded together with an *I*-section 60×110 as shown in Figure P11.24. Determine the moments of inertia about the roidal axes. Also determine the radii of gyration about the same axes.

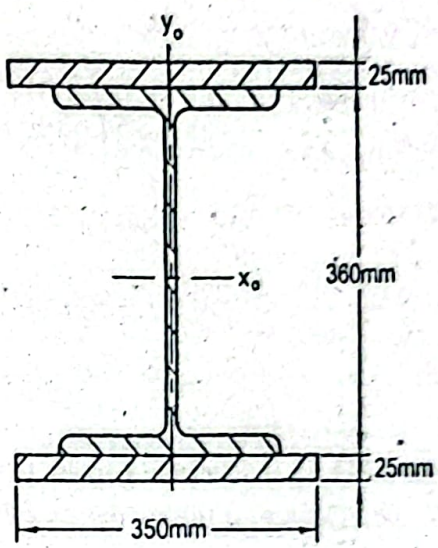

Figure P11.24

ven Data:

vo flange plates of size $350mm \times 25mm$

ıe *I*-section of designation $W360 \times 110$

Find:

Moments of inertia about centroidal x and y axes, $\bar{I}_x$ and $\bar{I}_y$

Radii of gyration about centroidal x and y axes, $\bar{k}_x$ and $\bar{k}_y$

olution:

roperties of *I*-section $W360 \times 110$ are (Appendix A-7),

$$\bar{I}_x = 331 \times 10^6\ mm^4$$

$$\bar{I}_y = 55.7 \times 10^6\ mm^4$$

rea, $A = 14000mm^2$

Altitude, $h = 360mm$

Using the transfer formula the moment of inertia of the flange plates about the centroidal

axis x_0, $\bar{I}_{x_1} = 2\left[\frac{1}{12} \times 350 \times 25^3 + 350 \times 25 \times 192.5^2\right] mm^4 = 649395833.2mm^4$

and from the properties of *I*-section we find,

$$\bar{I}_{x_2} = 331 \times 10^6\ mm^4$$

Therefore, $\bar{I}_{x_2} = \bar{I}_{x1} + \bar{I}_{x2}$

$= \left(649395833.2 + 331\times10^6\right) mm^4$

$= 980395833.2 mm^4 = 980.40\times10^6 mm^4$ *Answer*

Moment of inertia about the centroidal axis x_0,

$$\bar{I}_y = \bar{I}_{y1} + \bar{I}_{y2}$$

$$= 2\left[\frac{1}{12}\times25\times350^3\right] + 55.7\times10^6$$

$$= 234345833.3 mm^4 = 234.35\times10^6 mm^4 \text{ Answer}$$

Radius of gyration about the centroidal axis x_0,

$$\bar{k}_x = \sqrt{\frac{\bar{I}_x}{A}} = \sqrt{\frac{986.40\times10^6}{14000}} mm = 264.63mm \text{ Answer}$$

Radius of gyration about the centroidal axis y_o,

$$\bar{k}_y = \sqrt{\frac{\bar{I}_y}{A}} = \sqrt{\frac{234.35\times10^6}{14000}} mm = 129.38mm \text{ Answer}$$

Problem P11.25:

The section as shown in Figure P11.25 is fabricated from two channels $C250\times30$ and two flange plates $350mm\times30mm$. Determine the moments of inertia about the centroidal axes.

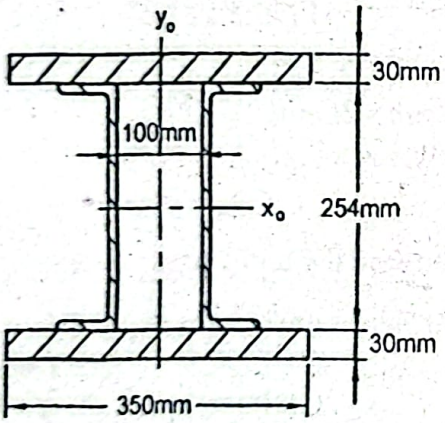

Figure P11.25

Given Data:

Two flange plates of size $350mm\times30mm$

Two channels of designation $C250\times30$

To Find:

- Moments of inertia about centroidal axes, $\bar{I}_x$ and $\bar{I}_y$

Solution:

Properties of *I*-section $C250\times30$ are (Appendix A9),

$$\bar{I}_x = 32.7\times10^6 mm^4$$

$$\bar{I}_y = 1.16\times10^6 mm^4$$

$A = 3780mm^2$

rea,

$h = 254mm$

ltitude,

sing the transfer formula the moment of inertia of the flange plates about the centroidal

is x_0,

$$\bar{I}_{x1} = 2\left[\frac{1}{12}\times 350\times 30^3 + 350\times 30\times 142^2\right]$$

$$= 425019000mm^4 = 425.02\times 10^6\, mm^4$$

Moment of inertia of the channels about the centroidal axis x_0,

$$\bar{I}_{x2} = 2\left[32.7\times 10^6\right]mm^4 = 65.4\times 10^6\, mm^4$$

Therefore, the moment of inertia about the centroidal axis x_0,

$$\bar{I}_x = \bar{I}_{x1} + \bar{I}_{x2}$$

$$= \left(425.02\times 10^6 + 65.4\times 10^6\right)mm^4 = 490.42\times 10^6\, mm^4 \textbf{ Answer}$$

Moment of inertia of the flange plates about the centroidal axis y_o,

$$\bar{I}_{y1} = 2\left[\frac{1}{12}\times 30\times 350^3\right]mm^4 = 214.38\times 10^6\, mm^4$$

Using the transfer formula the moment of inertia of the channels about the centroidal axis y_o,

$$\bar{I}_{y2} = 2\times\left[1.16\times 10^6 + 3780\times(50+15.3)^2\right]mm^4 = 34.56\times 10^6\, mm^4$$

Therefore, the moment of inertia about the centroidal axis y_o,

$$\bar{I}_y = \bar{I}_{y1} + \bar{I}_{y2}$$

$$= \left(214.38\times 10^6 + 34.56\times 10^6\right)mm^4 = 248.94\times 10^6\, mm^4 \textbf{ Answer}$$

Problem P11.26:

The section as shown in Figure P11.26 consists of two flange plates $350mm\times 25mm$, one web plate $350mm\times 25mm$ and four equal angles $125mm\times 125mm\times 16mm$. Determine the moments of inertia about the centroidal axes. The properties of the angles are: $\bar{I}_x = \bar{I}_y = 5.41\times 10^6\, mm^4$, area $A = 3740mm^2$ and $\bar{x} = \bar{y} = 37.1mm$.

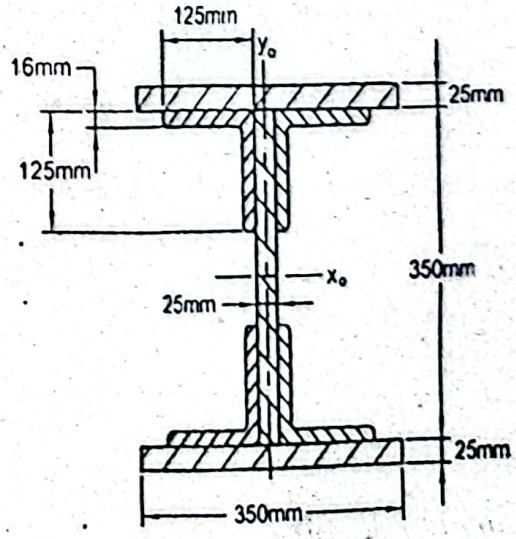

Figure P11.26

Given Data:

Two flange plates of size $350mm \times 25mm$

One web plate of size $350mm \times 25mm$

Four equal angles of size $125mm \times 125mm \times 16mm$

To Find:

- Moments of inertia about centroidal axes, $\bar{I}_x$ and $\bar{I}_y$

Solution:

Moment of inertia of the web plate about the centroidal axis x_0,

$$\bar{I}_{x1} = \frac{1}{12} \times 25 \times 350^3 mm^4 = 89322916.67 mm^4$$

Using the transfer formula the moment of inertia of the flange plates about the centroidal axis x_0,

$$\bar{I}_{x2} = 2\left[\frac{1}{12} \times 350 \times 25^3 + 350 \times 25 \times 187.5^2\right] mm^4$$

$$= 616145833.3 mm^4$$

Using the transfer formula the moment of inertia of the angles plates about the centroidal axis x_0,

$$\bar{I}_{x3} = 4\left[5.41 \times 10^6 + 3740 \times (175 - 37.1)^2\right] mm^4$$

$$= 306125493.6 mm^4$$

Therefore, the moment of inertia about the centroidal axis x_0 for the entire section,

$$\bar{I}_x = \bar{I}_{x1} + \bar{I}_{x2} + \bar{I}_{x3}$$

$$= (89322916.67 + 616145833.3 + 306125493.6) mm^4$$

$$= 101.16 \times 10^7 mm^4 \quad \textit{Answer}$$

Now we shall have to find the moment of inertia about the centroidal axis y_0.

Moment of inertia of the web plate about the centroidal axis y_0,

$$\bar{I}_{y1} = \frac{1}{12} \times 350 \times 25^3 mm^4 = 455729.17 mm^4$$

Moment of inertia of the flange plates about the centroidal axis y_0,

$$\bar{I}_{y2} = \frac{1}{12} \times 25 \times 350^3 mm^4 = 178645833.3 mm^4$$

Using the transfer formula the moment of inertia of the angles about the centroidal axis y_0,

$$\bar{I}_{y3} = 4\left[5.41 \times 10^6 + 3740 \times (37.1 + 12.5)^2\right] mm^4$$

$$= 58443993.6 mm^4$$

Therefore, the moment of inertia about the centroidal axis y_0 for the entire section,

$$\bar{I}_y = \bar{I}_{y1} + \bar{I}_{y2} + \bar{I}_{y3}$$

$$= (455729.17 + 178645833.3 + 58443993.6) mm^4$$

$$= 23.76 \times 10^7 mm^4 \quad \textit{Answer}$$

Problem P11.27:

Determine the product of inertia of a rectangle with respect to the *x-y* axes as shown in Figure P11.27.

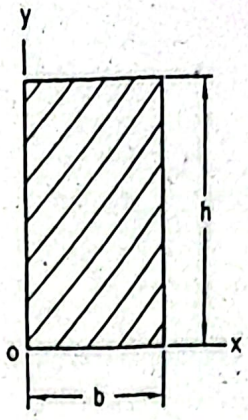

Figure P11.27

Given Data:

Base = b

Altitude = h

To Find:

- Product of inertia about x-*y* axes, I_{xy}

Solution:

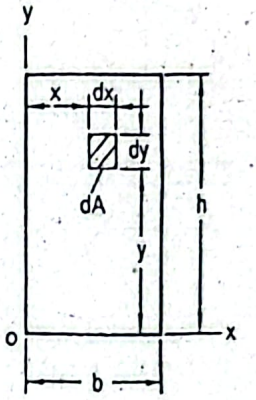

From the definition of the product of inertia considering the above figure,

$$I_{xy} = \int xy dA$$

$$= \int_{y=0}^{h} \int_{x=0}^{b} xy dx dy$$

$$= \int_{y=0}^{h} \left[\frac{x^2}{2} \right]_0^b y dy$$

$$= \frac{b^2}{2} \left[\frac{y^2}{2} \right]_0^h$$

$$= \frac{b^2}{2} \frac{h^2}{2} = \frac{b^2 h^2}{4} \quad \textit{Answer}$$

Alternate method:

Using the transfer formula, $I_{xy} = \bar{I}_{xy} + \bar{x}.\bar{y}A$

Due to symmetry, $\bar{I}_{xy} = 0$

Therefore, $I_{xy} = \bar{x}.\bar{y}A$

$$= \frac{b}{2} \times \frac{h}{2} \times (b \times h)$$

$$= \frac{b^2 h^2}{4} \quad Answer$$

Problem P11.28:

Determine the product of inertia of a right triangle with respect to the centroid. The base and altitude of the triangle are b and h respectively.

Given Data:

Base of triangle = b

Altitude of triangle = h

To Find:

- Product of inertia about centroid, $\bar{I}_{xy}$

Solution:

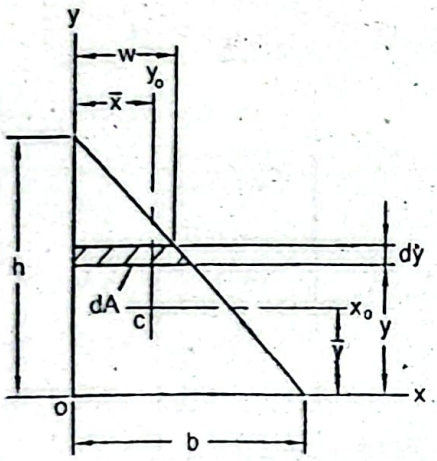

A horizontal differential area dA is considered as shown in the above figure,

$$dA = wdy$$

From the similar triangles, $\frac{w}{b} = \frac{h-y}{h}$

$$\text{or, } w = \frac{b}{h}(h-y)$$

Substituting the value of w, $dA = \frac{b}{h}(h-y)dy$

From the definition of the product of inertia,

$$I_{xy} = \int xydA$$

$$= \int xy\frac{b}{h}(h-y)dy$$

But here, $x = \frac{w}{2} = \frac{1}{2}\frac{b}{h}(h-y)$

Substituting this value,

$$I_{xy} = \int_0^h \left[2h\left(h-y\right)y\right]\left[\frac{b}{h}(h-y)\right]dy$$

$$= \frac{1}{2}\frac{b^2}{h^2}\int_0^h \left[h^2y - 2hy^2 + y^3\right]dy$$

$$= \frac{b^2}{2h^2}\left[\frac{h^2y^2}{2} - \frac{2hy^3}{3} + \frac{y^4}{4}\right]_0^h$$

$$= \frac{b^2h^2}{24}$$

Using the transfer formula, $I_{xy} = \bar{I}_{xy} + \bar{x}\,\bar{y}\,A$

But we have, $\bar{x} = \frac{b}{3}$, $\bar{y} = \frac{h}{3}$ and $A = \frac{bh}{2}$

Substituting these values, $\frac{b^2h^2}{24} = \bar{I}_{xy} + \frac{b}{3}\times\frac{h}{3}\times\frac{bh}{2}$

$$\text{or, } \bar{I}_{xy} = \frac{b^2h^2}{24} - \frac{b^2h^2}{18}$$

$$= -\frac{b^2h^2}{72} \quad \textit{Answer}$$

Problem P11.29:

Determine the product of inertia of the quarter circle of radius r with respect to the centroid as shown in Figure P11.29.

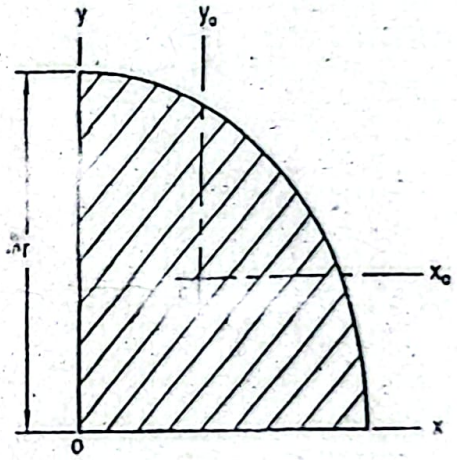

Figure P11.29

Given Data:

Radius of circle = r

To Find:

- Product of inertia about centroid, $\bar{I}_{xy}$

Solution:

A differential area dA is considered as shown in the figure below,

$$dA = \rho\, d\theta\, d\rho$$

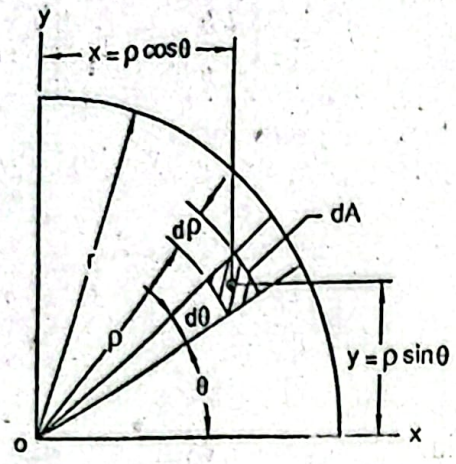

According to the definition of the product of inertia,

$$I_{xy} = \int xy dA$$

$$= \int_0^r \int_0^{\pi/2} \rho\cos\theta\, \rho\sin\theta\, \rho d\theta d\rho$$

$$= \int_0^r \int_0^{\pi/2} \rho^3 d\rho \cos\theta \sin\theta\, d\theta$$

$$= \frac{r^4}{4} \int_0^{\pi/2} \cos\theta \sin\theta d\theta$$

$$= \frac{r^4}{8} \int_0^{\pi/2} \sin 2\theta d\theta$$

$$= \frac{r^4}{8} \left[-\frac{1}{2} \cos 2\theta \right]_0^{\pi/2}$$

$$= \frac{r^4}{16} \left[-\cos 2\theta \right]_0^{\pi/2}$$

$$= \frac{r^4}{16} \times 2 = \frac{r^4}{8}$$

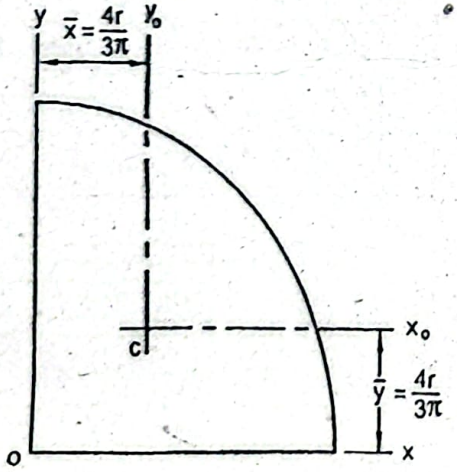

Using the transfer formula, $I_{xy} = \bar{I}_{xy} + \bar{x}\,\bar{y}\,A$

$$\text{or, } \frac{r^4}{8} = \bar{I}_{xy} + \frac{4r}{3\pi} \frac{4r}{3\pi} \frac{\pi r^2}{4}$$

$$= -0.0165r^4 \text{ Answer}$$

Problem P11.30:

Determine the maximum and minimum moments of inertia of a right angle triangle with a base of $250mm$ and altitude of $500mm$ about the principal axes passing through the centroid. Also determine the angles of the principal axes.

Given Data:

Base of triangle $= 250mm$

Altitude of triangle $= 500mm$

To Find:

- Maximum and minimum moments of inertia about principal axes passing through centroid, $\bar{I}_{u_{max}}$ and $\bar{I}_{u_{min}}$
- Angle of principal axes, θ

Solution:

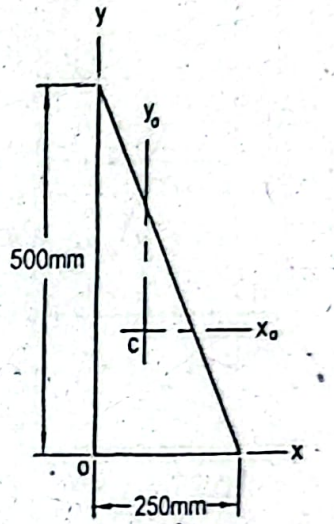

Moment of inertia about the centroidal axis x_0 as shown in the above figure,

$$\bar{I}_x = \frac{1}{36} \times 250 \times 500^3 mm^4 = 868.06 \times 10^6 mm^4$$

Moment of inertia about the centroidal axis y_0 ,

$$\bar{I}_y = \frac{1}{36} \times 500 \times 250^3 mm^4 = 217.01 \times 10^6 mm^4$$

Product of inertia about the centroidal axes,

$$\bar{I}_{xy} = -\frac{250^2 \times 500^2}{72} mm^4 = -217.01 \times 10^6 mm^4$$

$$\bar{I}_{u_{max}} \text{ or } \bar{I}_{u_{min}} = \frac{\bar{I}_x + \bar{I}_y}{2} \pm \sqrt{\left(\frac{\bar{I}_x - \bar{I}_y}{2}\right)^2 + \left(\bar{I}_{xy}\right)^2}$$

$$= \frac{868.06 \times 10^6 + 217.01 \times 10^6}{2} \pm \sqrt{\left(\frac{868.06 \times 10^6 - 217.01 \times 10^6}{2}\right)^2 + \left(217.01 \times 10^6\right)^2}$$

$= 976.57 \times 10^6 \pm 391.23 \times 10^6$

Therefore, $\bar{I}_{u_{max}} = 1367.80 \times 10^6 \, mm^4$ **Answer**

$\bar{I}_{u_{min}} = 585.34 \times 10^6 \, mm^4$ **Answer**

Angles at which they occur (Figure below),

$$\tan 2\theta = -\frac{\bar{I}_{xy}}{\frac{\bar{I}_x - \bar{I}_y}{2}}$$

$$\text{or, } \tan 2\theta = \frac{217.01 \times 10^6}{\frac{868.06 \times 10^6 - 217.01 \times 10^6}{2}}$$

$$\text{or, } \theta = 16.85^0, 106.85^0 \text{ Answer}$$

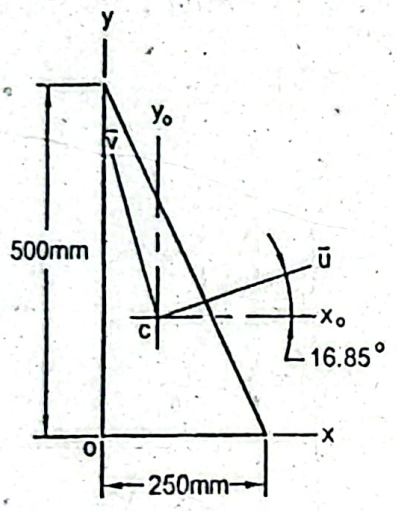

Problem P11.31:

Determine the moments of inertia about the centroidal axes $\bar{I}_x$, $\bar{I}_y$ and the product of inertia about the centroid $\bar{I}_{xy}$ of an angle section as shown in Figure P11.31. Also determine the maximum and minimum moments of inertia about the centroidal axes and the angles at which they occur.

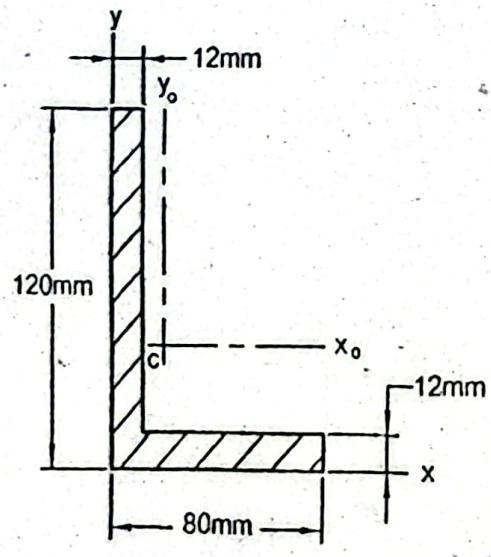

Figure P11.31

Given Data:

Base = 80mm

Altitude = 120mm

Thickness = 12mm

To Find:

- Moments of inertia about centroidal axes, $\bar{I}_x$ and $\bar{I}_y$
- Product of inertia about centroid, $\bar{I}_{xy}$
- Maximum and minimum moments of inertia, $\bar{I}_{u_{max}}$ and $\bar{I}_{u_{min}}$
- Angles at which maximum and minimum moments of inertia occur

Solution:

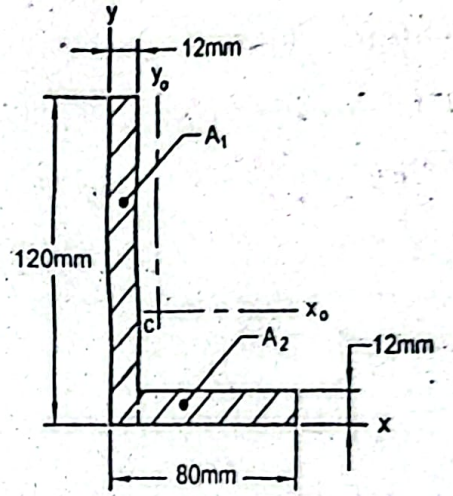

Whole area as shown in the above figure,

$$A = A_1 + A_2 = (120\times12 + 68\times12)mm^2 = 2256mm^2$$

To find the centroid of the angle section,

$$\bar{x}A = \bar{x}_1A_1 + \bar{x}_2A_2$$

or, $\bar{x}(2256) = 6\times120\times12 + 46\times68\times12$

or, $\bar{x} = 20.47mm$

Again we have

$$\bar{y}A = \bar{y}_1A_1 + \bar{y}_2A_2$$

or, $\bar{y}\times2256 = 60\times120\times12 + 6\times68\times12$

or, $\bar{y} = 40.47mm$

Moment of inertia about the centroidal axis x_0.

$$\bar{I}_x = (\bar{I}_{x_1} + A_1d_1^2) + (\bar{I}_{x_2} + A_2d_2^2)$$

$$= \left[\frac{1}{12}\times12\times120^3 + 120\times12\times(60-40.47)^2\right] +$$

$$\left[\frac{1}{12}\times68\times12^3 + 68\times12\times(40.47-6)^2\right]$$

or, $\bar{I}_x = 3256593.71mm^4$

$= 32.57\times10^5 mm^4$ *Answer*

Moment of inertia about the centroidal axis y_0,

$$\bar{I}_y = \left(\bar{I}_{y_1} + A_1 d_1^2\right) + \left(\bar{I}_{y_2} + A_2 d_2^2\right)$$

$$= \left[\frac{1}{12} \times 120 \times 12^3 + 120 \times 12 \times (20.47 - 6)^2\right] +$$

$$\left[\frac{1}{12} \times 12 \times 68^3 + 68 \times 12 \times (46 - 20.47)^2\right]$$

$$= 1165073.71 mm^4 = 11.65 \times 10^5 mm^4 \text{ Answer}$$

Product of inertia about the centroid using the transfer formula,

$$\bar{I}_{xy} = \left(\bar{I}_{x_1 y_1} + \bar{x}_1 \bar{y}_1 A_1\right) + \left(\bar{I}_{x_2 y_2} + \bar{x}_2 \bar{y}_2 A_2\right)$$

$$= \bar{x}_1 \bar{y}_1 A_1 + \bar{x}_2 \bar{y}_2 A_2 \quad \text{(Since } \bar{I}_{x_1 y_1} \text{ and } \bar{I}_{x_2 y_2} \text{ are zero due to symmetry)}$$

$$= \left[-(20.47 - 6) \times (60 - 40.47) \times 120 \times 12\right] +$$

$$(46 - 20.47) \times \left[-(40.47 - 6)\right] \times 68 \times 12$$

$$= -1125063.82 mm^4 = -112.51 \times 10^4 mm^4 \text{ Answer}$$

Alternate Method:

Product of inertia,

$$I_{xy} = \left(\bar{I}_{x_1 y_1} + \bar{x}_1 \bar{y}_1 A_1\right) + \left(\bar{I}_{x_2 y_2} + \bar{x}_2 \bar{y}_2 A_2\right)$$

$$= 0 + 6 \times 60 \times 120 \times 12 + 0 + 46 \times 6 \times 68 \times 12$$

$$= 743616 mm^4$$

But we have. $I_{xy} = \bar{I}_{xy} + \bar{x}\,\bar{y}\,A$

or. $743616 = \bar{I}_{xy} + 20.47 \times 40.47 \times 2256$

or. $\bar{I}_{xy} = -1125301.55 mm^4 = -112.53 \times 10^4 mm^4$ *Answer*

Now to find the maximum or minimum values of moments of inertia about the centroid,

$$\bar{I}_{u_{max}} = \frac{\bar{I}_x + \bar{I}_y}{2} + \sqrt{\left(\frac{\bar{I}_x - \bar{I}_y}{2}\right)^2 + \left(\bar{I}_{xy}\right)^2}$$

$$= \frac{2256593.71 + 1165073.71}{2} \pm \sqrt{\left(\frac{3256593.71 - 1165073.71}{2}\right)^2 + (-1125301.55)}$$

$$= 2210833.71 \pm 1536202.32$$

$$\bar{I}_{u_{max}} = 3747036.03 mm^4$$

$$= 37.47 \times 10^5 mm^4 \text{ Answer}$$

$$\bar{I}_{u_{min}} = 674631.39 mm^4$$

$$= 6.75 \times 10^5 mm^4 \text{ Answer}$$

Angles of the principal axes (Figure below),

$$\tan 2\theta = -\frac{I_{xy}}{\frac{I_x - I_y}{2}} = \frac{1125301.55}{\frac{3256593.71 - 1165073.71}{2}}$$

or, $\theta = 11.42^0,\ 101.42^0$

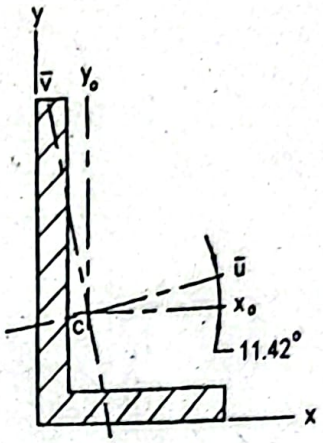

Problem P11.32:

Determine the moments of inertia and the product of inertia of a Z-section about the centroidal axis as shown in Figure P11.32. Also determine the maximum and minimum values of moments of inertia about the centroid of the section and the angles at which they occur.

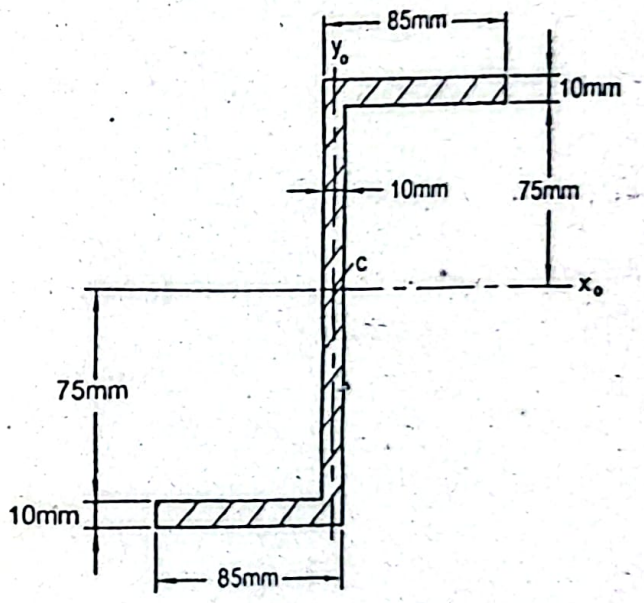

Figure P11.32

Given Data:

Base = *85mm*

Top width = *85mm*

Altitude = *170mm*

Thickness = *10mm*

To Find:

- Moments of inertia about centroidal axis, $\bar{I}_x$, $\bar{I}_y$

- Product of inertia about centroidal axis, $\bar{I}_{xy}$

- Maximum and minimum values of moments of inertia about centroid, $\bar{I}_{u\,max}$ and $\bar{I}_{u\,min}$

Solution:

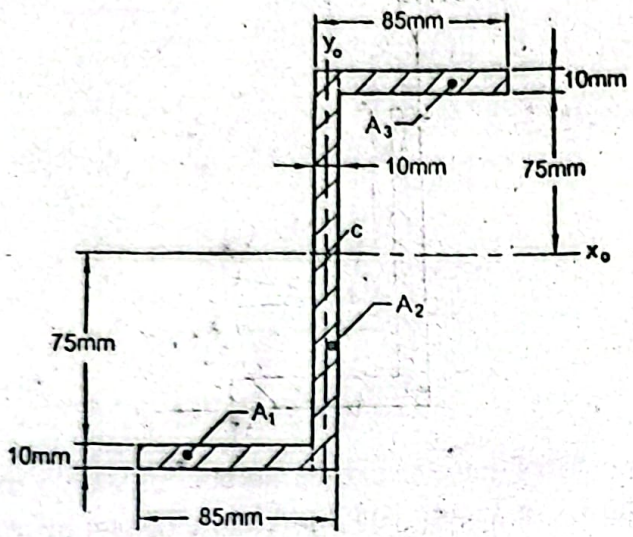

Moment of inertia about the centroidal axis x_0 as shown in the above figure,

$$\bar{I}_x = \left(\bar{I}_{x1} + A_1 d_1^2\right) + \bar{I}_{x2} + \left(\bar{I}_{x3} + A_3 d_3^2\right)$$

$$= \left[\frac{1}{12}\times 75\times 10^3 + 75\times 10\times (85-5)^2\right] + \frac{1}{12}\times 10\times 170^3 +$$

$$\left[\frac{1}{12}\times 75\times 10^3 + 75\times 10\times (85-5)^2\right]$$

$$= 13706666.67\,mm^4 = 13.71\times 10^6\,mm^4 \quad \textit{Answer}$$

Moment of inertia about the centroidal axis y_0,

$$\bar{I}_y = \left(\bar{I}_{y_1} + A_1 d_1^2\right) + \bar{I}_{y_2} + \left(\bar{I}_{y_3} + A_2 d_2^2\right)$$

$$\text{or, } \bar{I}_y = \left[\frac{1}{12}\times 10\times 75^3 + 75\times 10\times 42.5^2 + \frac{1}{12}\times 170\times 10^3 + \frac{1}{12}\times 10\times 75^3 + 75\times 10\times 42.5^2\right]$$

$$= 3426666.67\,mm^4 = 34.27\times 10^5\,mm^4 \quad \textit{Answer}$$

Using the transfer formula the product of inertia is obtained as,

$$\bar{I}_{xy} = \left(\bar{I}_{x_1y_1} + \bar{x}_1\bar{y}_1 A_1\right) + \left(\bar{I}_{x_2y_2} + \bar{x}_2\bar{y}_2 A_2\right) + \left(\bar{I}_{x_3y_3} + \bar{x}_3\bar{y}_3 A_3\right)$$

$$\text{or, } \bar{I}_{xy} = \bar{x}_1\,\bar{y}_1\,A_1 + \bar{x}_2\,\bar{y}_2\,A_2 + \bar{x}_3\,\bar{y}_3\,A_3 \quad (\text{Since } \bar{I}_{x_1y_1},\ \bar{I}_{x_2y_2} \text{ and } \bar{I}_{x_3y_3} \text{ are zero})$$

$$= (-42.5)\times(-80)\times 75\times 10 + 0 + (42.5)\times 80\times 75\times 10$$

$$= 51\times 10^5\,mm^4 \quad \textit{Answer}$$

Maximum or minimum value of moments of inertia,

$$\bar{I}_{u\,max/min} = \frac{\bar{I}_x + \bar{I}_y}{2} + \sqrt{\left(\frac{\bar{I}_x - \bar{I}_y}{2}\right)^2 + \left(\bar{I}_{xy}\right)^2}$$

$$= \frac{13706666.67 + 3426666.67}{2} \pm \sqrt{\left(\frac{13706666.67 - 3426666.67}{2}\right)^2 + (51\times10^5)^2}$$

$\bar{I}_{u_{max}} = 15807495.35mm^4 = 15.81\times10^6 mm^4$ **Answer**

$\bar{I}_{u_{min}} = 1325837.99mm^4 = 13.26\times10^5 mm^4$ **Answer**

Angles of the principal axes (Figure below),

$$\tan 2\theta = -\frac{\bar{I}_{uv}}{\frac{\bar{I}_x - \bar{I}_y}{2}}$$

or, $\tan 2\theta = -\dfrac{51\times10^5}{\frac{13706666.67 - 3426666.67}{2}}$

or, $\tan 2\theta = -0.9922$

or, $\theta = -22.39^0, -112.39^0$

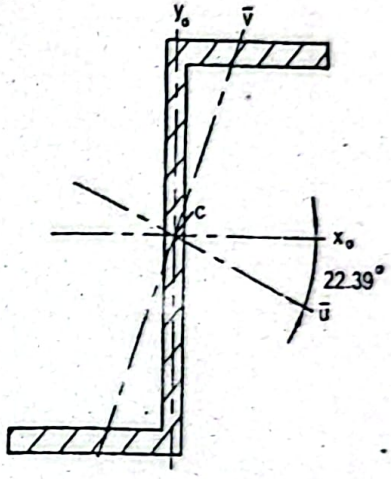

EXERCISES

Problem E11.1:

Determine the centroid of the shaded area as shown in Figure E11.1.

Ans.: $\bar{x} = 0.20a;\ \bar{y} = 0.483a$

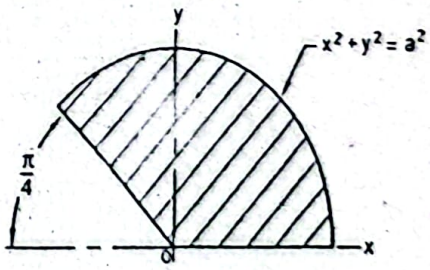

Figure E11.1

Problem E11.2:

Determine the moments of inertia about the x and y axes of the shaded area as shown in Figure E11.2.

Ans.: $I_x = \dfrac{r^4}{32}(3\pi+2);\ I_y = \dfrac{r^4}{32}(3\pi-2)$

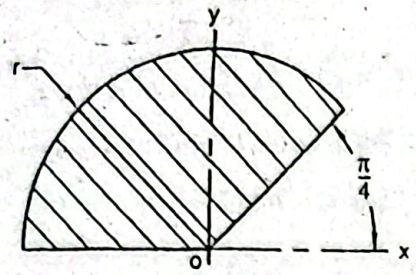

Figure E11.2

Problem E11.3:

For the shaded area as shown in Figure E11.3, find the moment of inertia about the centroidal x-axis if $h = 2b$. Also determine the per cent reduction in the moment of inertia and that of area due to the hole.

Ans.: $\bar{I}_x = 0.664b^4$; 0.45%; 9.82%

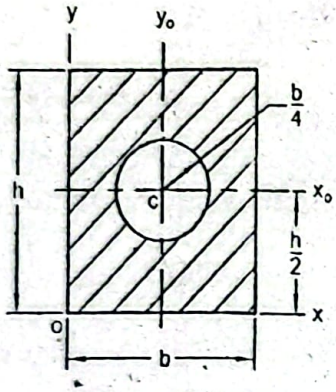

Figure E11.3

Problem E11.4:

For the shaded area as shown in Figure E11.4, find the moment of inertia about the centroidal axes if $h = \frac{3}{4}b$.

Ans.: $\bar{I}_x = 0.0206b^4$; $\bar{I}_y = 0.0412b^4$

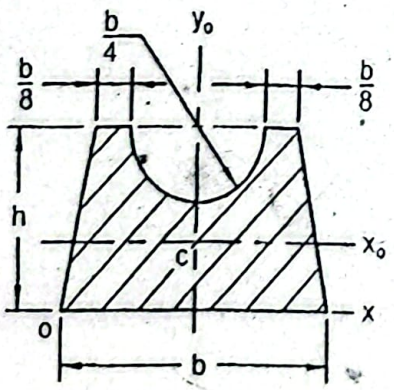

Figure E11.4

Problem E11.5:

Two unequal angles have been welded together as shown in Figure E11.5. Determine the centroidal moment of inertia of this section.

Ans.: $\bar{I}_x = 2.72 \times 10^6\ mm^4$; $\bar{I}_y = 3.20 \times 10^6\ mm^4$

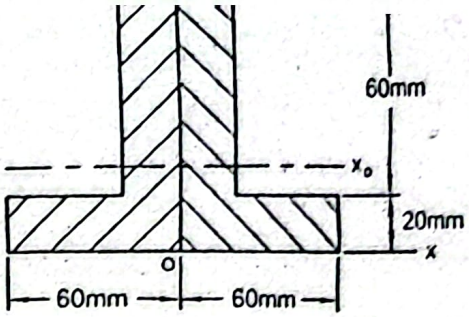

Figure E11.5

Problem E11.6:

A $C310\times45$ channel is welded to the top of $W360\times110$ I-section as shown in Figure E11.6. Determine the moment of inertia about the centroidal x-axis.

Ans.: $\bar{I}_x = 506.57\times10^6\ mm^4$

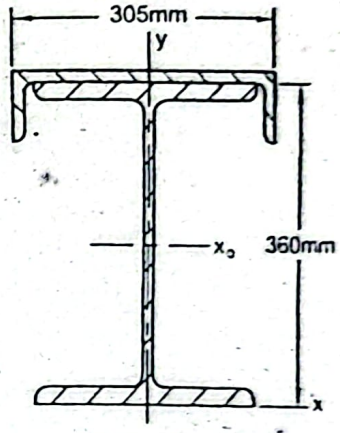

Figure E11.6

Problem E11.7:

Find the product of inertia about the x- and y-axes of the hollow quarter circle as shown in Figure E11.7.

Ans.: $0.0841a^4$

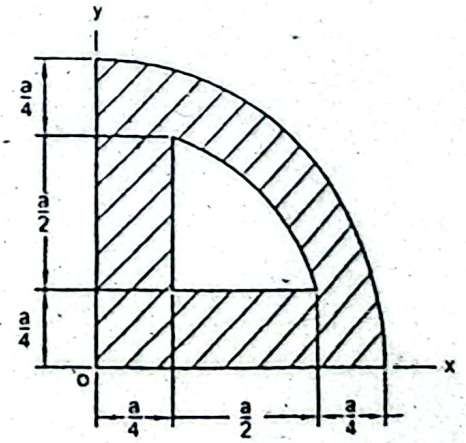

Figure E11.7

Problem E11.8:

Determine the moments of inertia about the centroidal axes $\bar{I}_x$, $\bar{I}_y$ and the product of inertia about the centroid $\bar{I}_{xy}$ of the angle section as shown in Figure E11.8. Also determine the maximum and minimum moments of inertia about the centroidal axes and the angles at which they occur.

Ans.: $\bar{I}_x = \bar{I}_y = 11.60 \times 10^6\, mm^4$; $\bar{I}_{xy} = -6.79 \times 10^6\, mm^4$; $\bar{I}_{u_{max}} = 18.39 \times 10^6\, mm^4$; $\bar{I}_{u_{min}} = 4.81 \times 10^6\, mm^4$; $\theta = 45^0, 135^0$

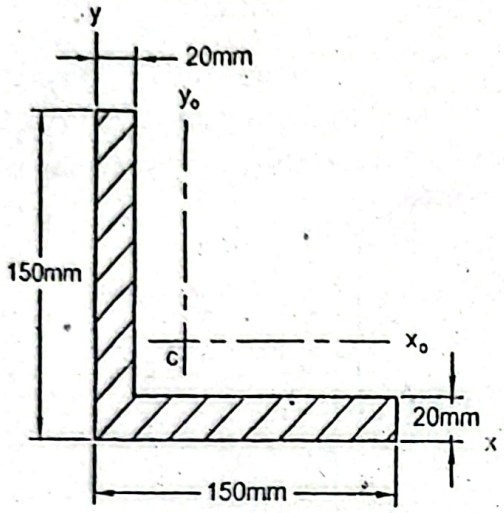

Figure E11.8

BIBLIOGRAPHY

1. Pytel A. and Singer F. L., "Strength of Materials", 4th Edition, 1987, Harper & Row, Publishers, Inc., India.
2. Popov, E. P., "Mechanics of Materials", 2nd Edition, 1986, Eastern Economy Edition, Prentice Hall of India Private Limited, New Delhi, India.
3. Laurson P. G. and Cox W. J., "Mechanics of Materials", 3rd Edition. 1954, John Wiley & Sons, Inc., New York, U.S.A.
4. Nash W. A., "Theory and Problems of Strength of Materials", 2nd Edition, 1977, Schaum's Outline Series, McGraw-Hill Book Company, U.S.A.
5. Olsen G. A., "Elements of Mechanics of Materials", 3rd Edition, 1974, Prentice Hall, U.S.A.
6. Timoshenko S. P., "Strength of Materials", 2nd Edition, 1940, D. Van Nostrand Company Inc., New York, U.S.A.
7. Shames I. H., "Mechanics of Deformable Solids", Prentice Hall of India (2000).
8. Timoshenko and Goodier, "Theory of Elasticity", 2nd Edition, 1951, McGraw Hill, U.S.A.

Location of Centroidal and Neutral Axis of Common Sections

Rectangular Section

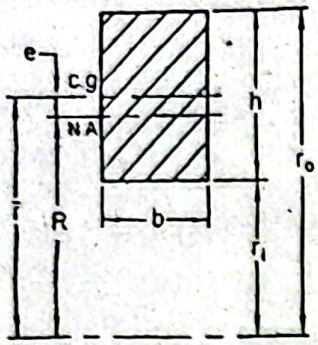

$$\bar{r} = r_i + \frac{h}{2}$$

$$R = \frac{h}{ln\left(\frac{r_o}{r_i}\right)}$$

Solid Circular Section

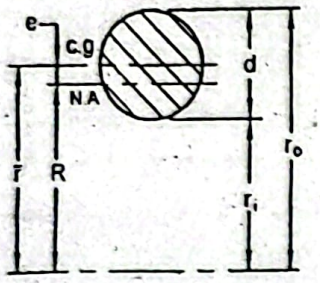

$$\bar{r} = r_i + \frac{d}{2}$$

$$R = \frac{d^2}{4\left(2\bar{r} - \sqrt{4\bar{r}^2 - d^2}\right)}$$

Trapezoidal Section

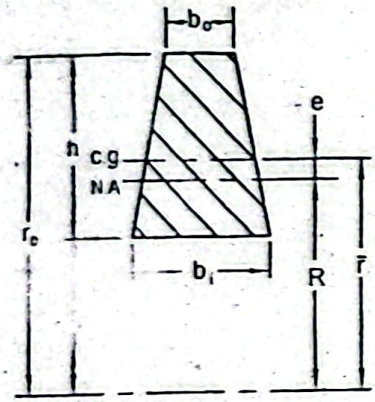

$$\bar{r} = r_i + \frac{h}{3}\frac{b_i + 2b_o}{b_i + b_o}$$

$$R = \frac{A}{b_o - b_i + \left[\left(b_i r_o - b_o r_i\right)/h\right] ln\left(r_o / r_i\right)}$$

Note: For triangular section put $b_o = 0$

T Section

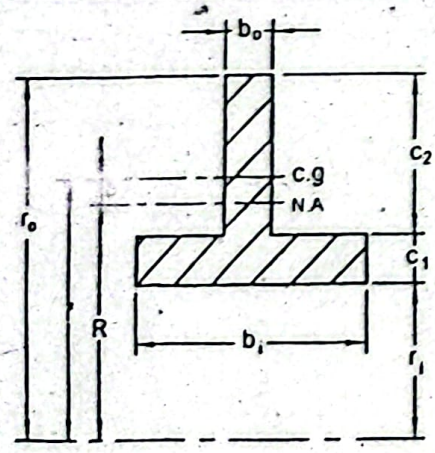

$$\bar{r} = r_i + \frac{b_i c_1^2 + 2b_o c_1 c_2 + b_o c_2^2}{2\left(b_o c_2 + b_i c_1\right)}$$

$$R = \frac{b_i c_1 + b_o c_2}{b_i ln\left[\left(r_i + c_1\right)/r_i\right] + b_o ln\left[r_o/\left(r_i + c_1\right)\right]}$$

APPENDIX A2

Areas and Centroids of Common Shapes of Moment Diagrams

Shape	Moment Diagram	Area	$\bar{x}$	Example of Loading	Moment or Equation
Rectangle	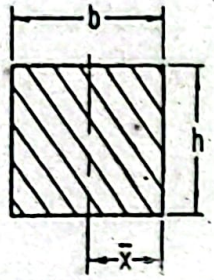	bh	$\frac{b}{2}$	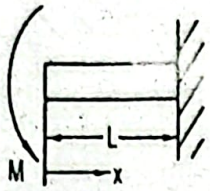	$M = const.$
Triangle	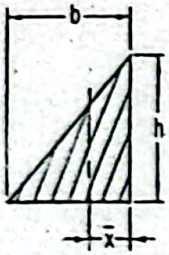	$\frac{bh}{2}$	$\frac{b}{3}$	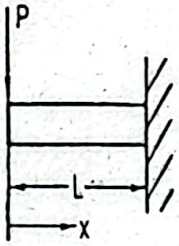	$M = -Px$
Parabolic Spandrel	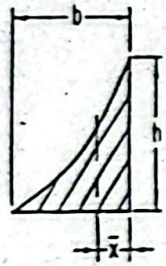	$\frac{bh}{3}$	$\frac{b}{4}$	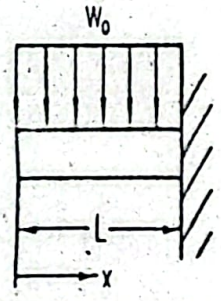	$M = -\frac{w_0 x^2}{2}$
Cubic Spandrel	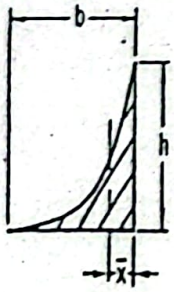	$\frac{bh}{4}$	$\frac{b}{5}$	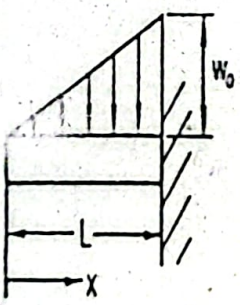	$M = -\frac{w_0 x^3}{6L}$

APPENDIX A3
Moment of Inertia of Some Geometric Configurations

Moment of Inertia	Radius of Gyration	Configuration
$\bar{I}_x = \frac{bh^3}{12}$ $I_x = \frac{bh^3}{3}$	$\bar{k}_x = \frac{h}{\sqrt{12}}$ $k_x = \frac{h}{\sqrt{3}}$	**Rectangle** 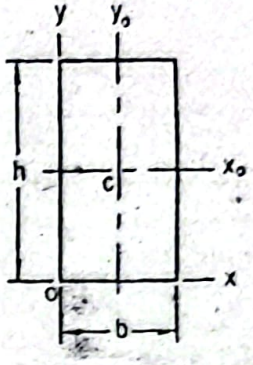
$\bar{I}_x = \frac{bh^3}{36}$ $I_x = \frac{bh^3}{12}$	$\bar{k}_x = \frac{h}{\sqrt{18}}$ $k_x = \frac{h}{\sqrt{6}}$	**Any Triangle** 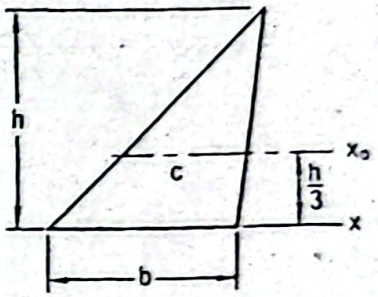
$\bar{I}_x = \frac{\pi r^4}{4}$ $\bar{J} = \frac{\pi r^4}{2}$	$\bar{k}_x = \frac{r}{2}$ $\bar{k}_z = \frac{r}{\sqrt{2}}$	**Circle** 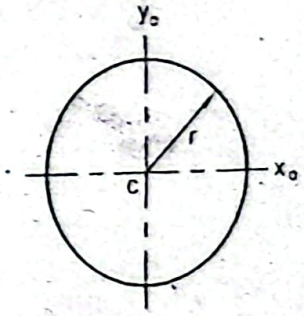
$I_x = \bar{I}_y = \frac{\pi r^4}{8}$ $\bar{I}_x = 0.11r^4$	$k_x = \bar{k}_y = \frac{r}{2}$ $\bar{k}_x = 0.264r$	**Semicircle** 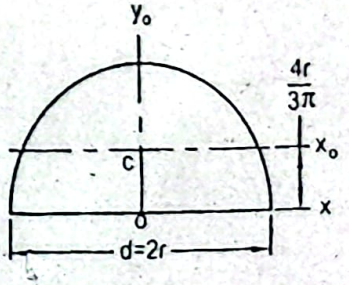

$I_x = I_y = \frac{\pi r^4}{16}$ $\bar{I}_x = \bar{I}_y = 0.055r^4$	$k_x = k_y = \frac{r}{2}$ $\bar{k}_x = \bar{k}_y = 0.264r$	**Quarter Circle** 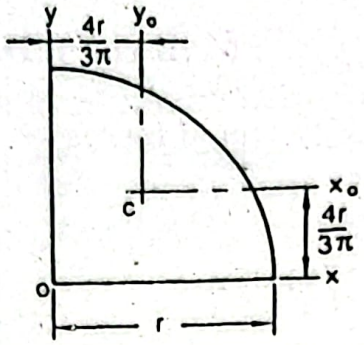
$\bar{I}_x = \frac{\pi ab^3}{4}$ $\bar{I}_y = \frac{\pi ba}{4}$	$\bar{k}_x = \frac{b}{2}$ $\bar{k}_y =$	**Ellipse** 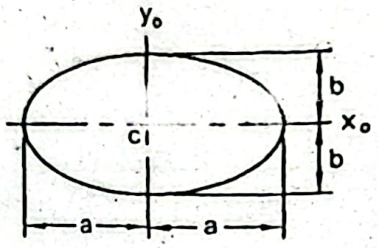

APPENDIX A4
SI Units and SI Unit Prefixes

SI Units	Quantity	Unit	SI Symbol	Formula
SI base unit	Length	Meter	m	-
	Mass	Kilogram	kg	-
	Time	Second	s	-
	Temperature	Kelvin	K	-
SI supplementary unit	Plane angle	radian	rad	-
SI derived units	Energy	Joule	J	Nm
	Force	Newton	N	Kgm/s^2
	Power	Watt	W	J/s
	Pressure	Pascal	Pa	N/m^2
	Work	Joule	J	Nm

Multiplication factor	Prefix	Symbol	Term
$1\ 000\ 000\ 000\ 000 = 10^{12}$	tera	T	One trillion
$1\ 000\ 000\ 000 = 10^{9}$	giga	G	One billion
$1\ 000\ 000 = 10^{6}$	mega	M	One million
$1\ 000 = 10^{3}$	**kilo**	**k**	**One thousand**
$100 = 10^{2}$	hecto	h	One hundred
$10 = 10$	deka	da	Ten
	deci	d	One-tenth
$0.1 = 10^{-1}$	centi	c	One-hundredth
$0.01 = 10^{-2}$	milli	m	One-thousandth
$0.001 = 10^{-3}$	micro	μ	One-millionth
$0.\ 000\ 001 = 10^{-6}$	nana	n	One billionth
$0.000\ 000\ 001 = 10^{-9}$	pico	p	One-trillionth
$0.000\ 000\ 000\ 001 = 10^{-12}$			

APPENDIX A3
SI Units of Physical Quantities

Quantity	SI Unit
Acceleration	m/s^2
Angular acceleration	rad/s^2
Angular displacement	rad
Angular momentum	kgm^2/s
Angular velocity	rad/s
Area	m^2
Density	kg/m^3
Displacement	m
Energy	Nm (J)
Force	N
Frequency	Hz
Length	m
Mass	kg
Modulus of elasticity	$N/m^2(Pa) \equiv GPa$
Modulus of rigidity	$N/m^2(Pa) \equiv GPa$
Moment	Nm
Momentum	$kgm/s \equiv Ns$
Moment of inertia	kgm^2
Power	$W \equiv Nm/s \equiv J/s$
Stress, pressure	N/m^2 (Pa)
Temperature, absolute	K
Time	s
Velocity	m/s
Torque	Nm
Viscosity (dynamic)	$Ns/m^2 \equiv Pa\ s$
Viscosity (kinematic)	m^2/s
Volume	m^3
Weight	N
Work	Nm (J)

Average Mechanical Properties of Some Common Metals

Metal	Density, ρ (kg/m^3)	Ultimate strength $S_u(MPa)$			Yield strength $S_y(MPa)$	Modulus of elasticity $E(MPa)$	Modulus of rigidity $G(MPa)$	Coefficient of thermal expansion $\alpha(\mu m/m^0C)$	Percentage elongation	Poisson's ratio μ
		Tensile	Compressive	Shear						
Steel 0.2% Carbon, cold drawn	7850	540	-	400	455	200	80	11.7	20	0.30
Steel 0.2% Carbon, hot rolled	7850	450	-	340	330	200	80	11.7	36	0.30
Steel 0.3% Carbon, hot rolled	7850	550	-	410	350	200	80	11.7	32	0.30
Steel 0.45% Carbon, hot rolled	7850	660	-	495	405	200	80	11.7	22	0.30
Steel 0.45% Carbon, cold drawn	7850	690	-	-	585	200	80	11.7	19	0.30
Gray cast iron (SAE 120)	7100	240	855	338	-	100	40	10.1	-	0.211
Malleable cast iron	7250	360	360	330	235	172	74	11.9	18	0.271
Aluminum alloy (2014-T6) hard	2800	480	-	290	410	73	28	23.1	13	0.33

APPENDIX A6 (Contd.)

Average Mechanical Properties of Some Common Metals

Metal	Density, ρ (kg/m^3)	Ultimate strength S_u (MPa)			Yield strength S_y (MPa)	Modulus of elasticity E (MPa)	Modulus of rigidity G (MPa)	Coefficient of thermal expansion α ($\mu m/m^0C$)	Percentage elongation	Poisson's ratio μ
		Tensile	Compressive	Shear						
Aluminum cast	2650	90		70	-	70	30	23.1	20	0.334
Brass (70%Cu, 30%Zn)	8500	480		290	360	110	41	20	30	0.331
Silicon Bronze (ASTMB98-B)	8750	448		310	275	117	44	17.8	10	0.34
Copper, hard drawn	8800	380	-	-	-	120	40	16.8	4	0.355

Note: For steel S_y (Shear) is approximately equal to 0.6.

For steel proportional limit, $S_p \approx S_y$ (tension)

Properties of W Shapes (Wide- Flange Sections)

Designation	Theoretical Mass, m (kg/m)	Area, A (mm^2)	Depth, h (mm)	Flange		Web Thickness t (mm)	Axis x-x			Axis y-y		
				Width, b (mm)	Thickness, t (mm)		I_x ($10^6 mm^4$)	Z_x ($10^3 mm^3$)	$k_x = \sqrt{I_x/A}$ (mm)	I_y ($10^6 mm^4$)	Z_y ($10^3 mm^3$)	$k_y = \sqrt{I_y/A}$ (mm)
W920×446	447.2	57000	933	423	42.7	24.0	8470	18200	385	540	2550	97.3
×417	418.1	53300	928	422	39.9	22.5	7880	17000	385	501	2370	97.0
×387	387.0	49300	921	420	36.6	21.3	7180	15600	382	453	2160	95.9
×365	364.6	46400	916	419	34.3	20.3	6710	14600	380	421	2010	95.3
×342	342.4	43600	912	418	32.0	19.3	6250	13700	379	390	1870	94.6
×313	312.7	39800	932	309	34.5	21.1	5480	11800	371	170	1100	65.4
×289	288.6	36800	927	308	32.0	19.4	5040	10900	370	156	1020	65.1
×271	271.7	34600	923	307	30.0	18.4	4720	10200	369	145	946	64.7
×253	253.7	32300	919	306	27.9	17.3	4370	9520	368	134	874	64.4
×238	238.3	30400	915	305	25.9	16.5	4060	8880	365	123	806	63.6
×223	224.2	28600	911	304	23.9	15.9	3770	8270	353	112	738	62.6
×201	201.3	25600	903	304	20.1	15.2	3250	7200	356	94.4	621	60.7
W840×359	359.4	45800	868	403	35.6	21.2	5910	13600	359	389	1930	92.2
×329	329.4	42000	862	401	32.4	19.7	5350	12400	357	349	1740	91.2
×299	299.3	38100	855	400	29.2	18.2	4790	11200	355	312	1560	90.5
×226	226.6	28900	851	294	26.8	16.1	3400	7990	343	114	774	62.8
×210	210.8	26800	846	293	24.4	15.4	3110	7340	341	103	700	62.0
×193	193.5	24700	840	292	21.7	14.7	2780	6630	335	90.3	618	60.5
×176	176.0	22400	835	292	18.8	14.0	2460	5900	331	78.2	536	59.1
W760×314	314.4	40100	786	384	33.4	19.7	4270	10900	326	316	1640	88.8
×284	283.9	36200	779	382	30.1	18.0	3810	9790	324	280	1470	87.9
×257	257.6	32800	773	381	27.1	16.6	3420	8840	323	250	1310	87.3
×196	196.8	25100	770	268	25.4	15.6	2400	6240	309	81.7	610	57.1
×185	184.8	23500	766	267	23.6	14.9	2230	5820	308	75.1	563	56.5
×173	173.6	22100	762	267	21.6	14.4	2060	5400	305	68.7	515	55.8
×161	160.4	20400	758	266	19.3	13.8	1860	4900	302	60.7	457	54.5
×147	147.1	18700	753	265	17.0	13.2	1660	4410	298	52.9	399	53.2

APPENDIX: A7 (Contd.)

Properties of *W* Shapes (Wide Flange Sections)

Designation	Theoretical Mass, m (kg / m)	Area, A (mm^2)	Depth, h (mm)	Flange		Web Thickness t (mm)	Axis x-x			Axis y-y		
				Width, b (mm)	Thickness, t (mm)		I_x ($10^6 mm^4$)	Z_x ($10^3 mm^3$)	$k_x = \sqrt{I_x/A}$ (mm)	I_y ($10^6 mm^4$)	Z_y ($10^3 mm^3$)	$k_y = \sqrt{I_y/A}$ (mm)
W690×265	264.5	700	706	358	30.2	18.4	2900	8220	293	231	1290	82.8
×240	239.9	30600	701	356	27.4	16.8	2610	7450	292	206	1160	82.0
×217	217.8	27700	695	355	24.8	15.4	2340	6740	291	185	1040	81.7
×170	169.9	21600	693	256	23.6	14.5	1700	4910	281	66.2	517	55.4
×152	152.1	19400	688	254	21.1	13.1	1510	4380	279	57.8	455	54.6
×140	139.8	17800	684	254	18.9	12.4	1360	3980	276	51.7	407	53.9
×125	125.6	16000	678	253	16.3	11.7	1190	3500	273	44.1	349	52.5
W610×241	241.7	30800	635	329	31.0	17.9	2150	6780	264	184	1120	77.3
×217	217.9	27800	628	328	27.7	16.5	1910	6070	262	163	995	76.6
×195	195.6	24900	622	327	24.4	15.4	1680	5400	260	142	871	75.5
×174	174.3	22200	616	325	21.6	14.0	1470	4780	257	124	761	74.7
×155	154.9	19700	611	324	19.0	12.7	1290	4220	256	108	666	74.0
×140	140.1	17900	617	230	22.2	13.1	1120	3630	250	45.1	392	50.2
×125	125.1	15900	612	229	19.6	11.9	985	3220	249	39.3	343	49.7
×113	113.4	14400	608	228	17.3	11.2	875	2880	247	34.3	300	48.8
×101	101.7	13000	603	228	14.9	10.5	764	2530	242	29.5	259	47.6
×92	92.3	11800	603	179	15.0	10.9	646	2140	234	14.4	161	34.9
×82	81.9	10400	599	178	12.8	10.0	560	1870	232	12.1	136	34.1
W530×219	218.9	27900	560	318	29.2	18.3	1510	5390	233	157	986	75.0
×196	196.3	25000	554	316	26.3	16.5	1340	4840	232	139	877	74.6
×182	181.7	23100	551	315	24.4	15.2	1240	4480	232	127	808	74.1
×165	165.3	21100	546	313	22.2	14.0	1110	4060	229	114	726	73.5
×150	150.6	19200	543	312	20.3	12.7	1010	3710	229	103	659	73.2
×138	138.3	17600	549	214	23.6	14.7	861	3140	221	38.7	362	46.9
×123	123.2	15700	544	212	21.2	13.1	761	2800	220	33.8	319	46.4
×109	109.0	13900	539	211	18.8	11.6	667	2480	219	29.5	280	46.1
×101	101.4	12900	537	210	17.4	10.9	617	2300	219	26.9	256	45.7
×92	92.5	11800	533	209	15.6	10.2	552	2070	216	23.8	228	44.9
×82	82.4	10500	528	209	13.3	9.5	479	1810	214	20.3	194	44.0
×85	84.7	10800	535	166	16.5	10.3	485	1810	212	12.6	152	34.2
×74	74.7	9520	529	166	13.6	9.7	411	1550	208	10.4	125	33.1
×66	65.7	8370	525	165	11.4	8.9	351	1340	205	8.57	104	32.0

Properties of *W* Shapes (Wide- Flange Sections)

Designation	Theoretical Mass, m (kg/m)	Area, A (mm^2)	Depth, h (mm)	Flange		Web Thickness t (mm)	Axis x-x			Axis y-y		
				Width, b (mm)	Thickness, t (mm)		I_x ($10^6\ mm^4$)	Z_x ($10^3\ mm^3$)	$k_x = \sqrt{I_x/A}$ (mm)	I_y ($10^6\ mm^4$)	Z_y ($10^3\ mm^3$)	$k_y = \sqrt{I_y/A}$ (mm)
W460× 177	177.3	22600	482	286	26.9	16.6	910	3780	201	105	735	68.2
× 158	157.7	20100	476	284	34.9	15.0	796	3350	199	91.4	643	67.4
× 144	144.6	18400	472	283	22.1	13.6	726	3080	199	83.6	591	67.4
× 128	128.4	16400	467	282	19.6	12.2	637	2730	197	73.3	520	66.9
× 113	113.1	14400	463	280	17.3	10.8	556	2400	196	63.3	452	66.3
× 106	105.8	13500	669	194	20.6	12.6	488	2080	190	25.1	259	43.1
× 97	96.6	12300	466	193	19.0	11.4	445	1910	190	22.8	237	43.1
× 89	89.3	11400	463	192	17.7	10.5	410	1770	190	20.9	218	42.8
× 82	81.9	10400	460	191	16.0	9.9	370	1610	189	18.6	195	42.3
× 74	74.2	9450	457	190	14.5	9.0	333	1460	188	16.6	175	41.9
× 67	68.1	8680	454	190	12.7	8.5	300	1320	186	14.6	153	41.0
× 61	60.9	7760	450	189	10.8	8.1	259	1150	183	12.2	129	39.7
× 68	68.5	8730	459	154	15.4	9.1	297	1290	184	9.41	122	32.8
× 60	59.6	7590	455	153	13.3	8.0	255	1120	183	7.96	104	32.4
× 52	52.0	6630	450	152	10.8	7.6	212	943	179	6.34	83.4	30.9
W410× 149	149.3	19000	431	265	25.0	14.9	619	2870	180	77.7	586	63.9
× 132	132.1	16800	425	263	22.2	13.3	538	2530	179	67.4	512	63.3
× 114	114.5	14600	420	261	19.3	11.6	462	2200	178	57.2	439	62.6
× 100	99.6	12700	415	260	16.9	10.0	398	1920	177	49.5	381	62.4
× 85	85.0	10800	417	181	18.2	10.9	315	1510	171	18.0	199	40.8
× 74	74.9	9550	413	180	16.0	9.7	275	1330	170	15.6	173	40.4
× 67	67.5	8600	410	179	14.4	8.8	246	1200	169	13.8	154	40.1
× 60	59.5	7580	407	178	12.8	7.7	216	1060	169	12.0	135	39.8
× 54	53.4	6810	403	177	10.9	7.5	186	924	165	10.1	114	38.5
× 46	46.2	5890	403	140	11.2	7.0	156	773	163	5.14	73.4	29.5
× 39	39.2	4990	399	140	8.8	6.4	127	634	160	4.04	57.7	28.5

APPENDIX: A7 (Contd.)

Properties of *W* Shapes (Wide- Flange Sections)

Designation	Theoretical Mass, m (kg/m)	Area, A (mm^2)	Depth, h (mm)	Flange		Web Thickness t (mm)	Axis x-x			Axis y-y		
				Width b (mm)	Thickness t (mm)		I_x ($10^6 mm^4$)	Z_x ($10^3 mm^3$)	$k_x = \sqrt{I_x/A}$ (mm)	I_y ($10^6 mm^4$)	Z_y ($10^3 mm^3$)	$k_y = \sqrt{I_y/A}$ (mm)
W360×1086	1087.9	139000	569	454	125	78.0	5960	20900	207	1960	8650	119
×990	991.0	126000	556	448	115	71.9	5190	18900	203	1730	7740	117
×900	902.2	115000	531	442	106	65.9	4500	17000	198	1530	6940	115
×818	819.0	104000	514	437	97.0	60.5	3920	15300	194	1360	6200	114
×744	744.3	94800	498	432	88.9	55.6	3420	13700	190	1200	5550	113
×677	677.8	86300	483	428	81.5	51.2	2990	12400	186	1070	4990	111
×634	634.3	80800	474	424	77.1	47.6	2740	11600	184	983	4630	110
×592	592.6	75500	465	421	72.3	45.0	2500	10800	182	902	4280	109
×551	550.6	70100	455	418	67.6	42.0	2260	9940	180	825	3950	108
×509	509.6	64900	446	416	62.7	39.1	2050	9170	178	754	3630	108
W360×463	462.8	59000	435	412	57.4	35.8	1800	8280	175	670	3250	107
×421	421.7	53700	425	409	52.6	32.8	1600	7510	173	601	2940	106
×382	382.4	48700	416	406	48.0	29.8	1410	6790	170	536	2640	105
×347	347.0	44200	407	404	45.7	27.2	1250	6140	168	481	2380	104
×314	313.4	39900	399	401	39.6	24.9	1100	5530	166	426	2120	103
×287	287.6	36600	393	399	36.6	22.6	997	5070	165	388	1940	103
×262	262.7	33500	387	398	33.3	21.1	894	4620	163	350	1760	102
×237	236.3	30100	380	395	30.2	18.9	788	4150	162	310	1570	101
×216	216.3	27600	375	394	27.7	17.3	712	3790	161	283	1430	101
W360×196	196.5	25000	372	374	26.2	16.4	636	3420	159	229	1220	95.7
×179	179.2	22800	368	373	23.9	15.0	575	3120	159	207	1110	95.3
×162	162.0	20600	364	371	21.8	13.3	516	2830	158	186	1000	95.0
×147	147.5	18800	360	370	19.8	12.3	463	2570	157	167	904	94.2
×134	134.0	17100	356	369	18.0	11.2	415	2330	156	151	817	94.0
×122	121.7	15500	363	257	21.7	13.0	365	2010	153	61.5	478	63.0
×110	110.2	14000	360	256	19.9	11.4	331	1840	154	55.7	435	63.1
×101	101.2	12900	357	255	18.3	10.5	302	1690	153	50.6	397	62.6
×91	90.8	11600	353	254	16.4	9.5	267	1510	152	44.8	353	62.1

Properties of *W* Shapes (Wide- Flange Sections)

Designation	Theoretical Mass, m (kg/m)	Area, A (mm^2)	Depth, h (mm)	Flange		Web Thickness t (min)	Axis x-x			Axis y-y		
				Width, b (mm)	Thickness, t (min)		I_x ($10^6 mm^4$)	Z_x ($10^3 mm^3$)	$k_x = \sqrt{\frac{I_x}{A}}$ (min)	I_y ($10^6 mm^4$)	Z_y ($10^3 mm^3$)	$k_y = \sqrt{\frac{I_y}{A}}$ (mm)
W360 × 79	79.3	10100	354	205	16.8	9.4	227	1280	150	24.2	236	48.9
× 72	71.5	9110	350	204	15.1	8.6	201	1150	149	21.4	210	48.5
× 64	63.9	8140	347	203	13.5	7.7	178	1030	148	18.8	186	48.1
× 57	56.7	7220	358	172	13.1	7.9	161	897	149	11.1	129	39.2
× 51	50.6	6450	355	171	11.6	7.2	141	796	148	9.68	113	38.7
× 45	45.0	5730	352	171	9,8	6.9	122	691	146	8.18	95.7	37.8
× 39	39.1	4980	353	128	10.7	6.5	102	580	143	3.75	58.6	27.4
× 33	32.8	4170	349	127	8.5	5.8	82.7	474	141	2.91	45.8	26.4
W310× 500	500.4	63700	427	340	75.1	45.1	1690	7910	163	494	2910	88.1
× 454	454.0	57800	415	336	68.7	41.3	1480	7130	160	436	2600	86.9
× 415	415.1	52900	403	334	62.7	38.9	1300	6450	157	391	2340	86.0
× 375	374.3	47700	391	330	57.1	35.4	1130	5760	154	343	2080	84.8
× 342	343.3	43700	382	328	52.6	32.6	1010	5260	152	310	1890	84.2
× 313	313.3	39900	374	325	48.3	30,0	896	4790	150	277	1700	83.3
× 283	283.0	36000	365	322	44.1	26.9	787	4310	148	246	1530	82.7
× 253	252.9	32200	356	319	39.6	24.4	682	3830	146	215	1350	81.7
× 226	226.8	28900	348	317	35.6	22.1	596	3420	144	189	1190	80.9
× 202	202.6	25800	341	315	31.8	20.1	520	3050	142	166	1050	80.2
× 179	178.8	22800	333	313	28.1	18.0	445	2680	140	144	919	79.5
× 158	157.4	20100	327	310	25.1	15.5	386	2360	139	125	805	78.9
× 143	143.1	18200	323	309	22.9	14.0	348	2150	138	113	729	78.8
× 129	129.6	16500	318	308	20.6	13.1	308	1940	137	100	652	77.8
× 118	117.5	15000	314	307	18.7	11.9	275	1750	135	90.2	588	77.5
× 107	106.9	13600	311	306	17.0	10.9	248	1590	135	81.2	531	77.3
× 97	96.8	12300	308	305	15.4	9.9	222	1440	134	72.9	478	77.0
× 86	86.4	11000	310	254	16.3	9.1	199	1280	135	44.5	351	63.6
× 79	78.9	10100	306	254	14.6	8.8	177	1160	132	39.9	314	62.9
× 74	74.5	9490	310	205	16.3	9.4	165	1060	132	23.4	229	49.7
× 67	66.8	8510	306	204	14.6	8.5	145	949	131	20.7	203	49.3

APPENDIX: A7 (Contd.)

Properties of *W* Shapes (Wide- Flange Sections)

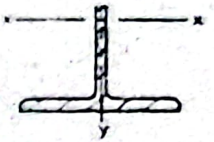

Designation	Theoretical Mass, m (kg/m)	Area, A (mm^2)	Depth, h (mm)	Flange		Web Thickness t (mm)	Axis x-x			Axis y-y		
				Width, b (mm)	Thickness, t (mm)		I_x ($10^6 mm^4$)	Z_x ($10^3 mm^3$)	$k_x = \sqrt{\frac{I_x}{A}}$ (mm)	I_y ($10^6 mm^4$)	Z_y ($10^3 mm^3$)	$k_y = \sqrt{\frac{I_y}{A}}$ (mm)
W310×60	59	7590	303	203	13.1	7.5	129	849	130	18.3	180	49.1
×52	52	6670	317	167	13.2	7.6	118	747	133	10.3	123	39.3
×45	44.6	5690	313	166	11.2	6.6	99.2	634	132	8.55	103	38.8
×39	38.7	4940	310	165	9.7	5.8	85.1	549	131	7.27	88.1	38.4
×33	32.8	4180	313	102	10.8	6.6	65.0	415	125	1.92	37.6	21.4
×28	28.4	3610	309	102	8.9	6.0	54.3	351	123	1.58	31.0	20.9
×24	23.8	3040	305	101	6.7	5.6	42.7	280	119	1.16	22.9	19.5
×21	21.1	2690	303	101	5.7	5.1	37.0	244	117	0.983	19.5	19.1
W250×167	167.4	21300	289	265	31.8	19.2	300	2080	119	98.8	746	68.1
×149	148.9	19000	282	263	28.4	17.3	259	1840	117	86.2	656	67.4
×131	131.1	16700	275	261	25.1	15.4	221	1610	115	74.5	571	66.8
×115	114.8	14600	269	259	22.1	13.5	189	1410	114	64.1	495	66.3
×101	101.2	12900	264	257	19.6	11.9	164	1240	113	55.5	432	65.6
×89	89.6	11400	260	256	17.3	10.7	143	1100	112	48.4	378	65.2
×80	80.1	10200	256	255	15.6	9.4	126	982	111	43.1	338	65.0
×73	72.9	9280	253	254	14.2	8.6	113	891	110	38.8	306	64.7
×67	67.1	8550	257	204	15.7	8.9	104	806	110	22.2	218	51.0
×58	58.2	7420	252	203	13.5	8.0	87.3	693	108	18.8	186	50.3
×49	49.0	6250	247	202	11.0	7.4	70.6	572	106	15.1	150	49.2
×45	44.9	5720	266	148	13.0	7.6	71.1	534	111	7.03	95.1	35.1
×39	38.7	4920	262	147	11.2	6.6	60.1	459	111	5.94	80.8	34.7
×33	32.7	4170	258	146	9.1	6.1	48.9	379	08	4.73	64.7	33.7
×28	28.5	3630	260	102	10.0	6.4	40.0	307	105	1.78	34.8	22.1
×25	25.3	3230	257	102	8.4	6.1	34.2	266	103	1.49	29.2	21.5
×22	22.4	2850	254	102	6.9	5.8	28.9	227	101	1.23	24.0	20.8
×18	17.9	2270	251	101	5.3	4.8	22.4	179	99.3	0.913	18.1	20.1

Properties of W Shapes (Wide- Flange Sections)

Designation	Theoretical Mass, m (kg/m)	Area, A (mm^2)	Depth, h (mm)	Flange		Web Thickness t (mm)	Axis x-x			Axis y-y		
				Width, b (mm)	Thickness, t (mm)		I_x ($10^6 mm^4$)	Z_x ($10^3 mm^3$)	$k_x = \sqrt{\frac{I_x}{A}}$ (mm)	I_y ($10^6 mm^4$)	Z_y ($10^3 mm^3$)	$k_y = \sqrt{\frac{I_y}{A}}$ (mm)
W200×100	99.5	12700	229	210	23.7	14.5	113	989	94.3	36.6	349	53.7
×86	86.7	11100	222	209	20.6	13.0	94.7	853	92.4	31.4	300	53.2
×71	71.5	9110	216	206	17.4	10.2	76.6	709	91.7	25.4	246	52.8
×59	59.4	7560	210	205	14.2	9.1	61.1	582	89.9	20.4	199	51.9
×52	52.3	6660	206	204	12.6	7.9	52.7	512	89.0	17.8	175	51.7
×46	46.0	5860	203	203	11.0	7.2	45.5	448	88.1	15.3	151	51.1
×42	41.7	5310	205	166	11.8	7.2	40.9	399	87.7	9.00	108	41.2
×36	35.9	4580	201	165	10.2	6.2	34.4	342	86.7	7.64	92.6	40.8
×31	31.4	4000	210	134	10.2	6.4	31.4	299	88.6	4.10	61.1	32.0
×27	26.6	3390	207	133	8.4	5.8	25.8	249	87.2	3.30	49.4	31.2
×22	22.4	2860	206	102	8.0	6.2	20.0	194	83.6	1.42	22.3	22.3
×19	19.4	2480	203	102	6.5	5.8	16.6	163	81.8	1.15	22.6	21.5
×15	15.0	1900	200	100	5.2	4.3	12.7	127	81.8	0.869	17.4	21.4
W150×37	37.1	4730	162	154	11.6	8.1	22.2	274	68.5	7.07	91.8	38.7
×30	29.8	3790	157	153	9.3	6.6	17.2	219	67.4	5.56	72.6	38.3
×22	22.3	2850	152	152	6.6	5.8	12.1	159	65.2	3.87	50.9	36.8
×24	24.0	3060	160	102	10.30	6.6	13.4	168	66.2	1.83	35.8	24.5
×18	18.0	2290	153	102	7.1	5.8	9.16	120	63.2	1.26	24.7	23.5
×14	13.6	1730	150	100	5.5	4.4	6.87	91.5	63.0	0.918	18.4	23.0
W130×28	28.1	3580	131	128	10.9	6.9	10.9	167	55.2	3.81	59.6	32.6
×24	23.6	3010	127	127	9.1	6.1	8.80	139	54.1	3.11	49.0	32.1
W100×19	19.4	2470	106	103	8.8	7.1	4.76	89.9	43.9	1.61	31.2	25.5

Appendix: A8

Properties of *S* Shapes (*I*-Beam Sections)

Designation	Theoretical Mass, m (kg/m)	Area, A (mm^2)	Depth, h (mm)	Flange		Web Thickness t (mm)	Axis x-x			Axis y-y		
				Width, b (mm)	Thickness, t (mm)		I_x ($10^6 mm^4$)	Z_x ($10^3 mm^3$)	$k_x = \sqrt{\frac{I_x}{A}}$ (mm)	I_y ($10^6 mm^4$)	Z_y ($10^3 mm^3$)	$k_y = \sqrt{\frac{I_y}{A}}$ (mm)
S610×180	180.0	22900	622	204	27.7	20.3	1310	4220	239	34.7	340	38.9
×158	157.8	20100	622	200	27.7	15.7	1220	3940	246	32.4	324	40.1
×149	148.7	18900	610	184	22.1	18.9	996	3270	230	20.1	218	32.6
×134	134.4	17100	610	181	22.1	15.9	939	3080	234	18.9	209	33.2
×119	119.1	15200	610	178	22.1	12.7	879	2880	240	17.9	201	34.3
S510×143	143.3	18300	516	183	23.4	20.3	702	2720	196	21.1	231	34.0
×128	128.9	16400	516	179	23.4	16.8	660	2560	201	19.6	219	34.6
×112	111.4	14200	508	162	20.2	16.1	532	2090	194	12.5	155	29.7
×98.2	98.4	12500	508	159	20.2	12.8	497	1960	199	11.7	148	30.6
S460×104	104.7	13300	457	159	17.6	18.1	387	1690	171	10.30	129	27.8
×81.4	81.6	10400	457	152	17.6	11.7	335	1470	179	8.77	115	29
S380×74	74.6	9500	381	143	15.8	14.0	203	1060	146	6.60	92.3	26.4
×64	63.9	8150	381	140	15.8	10.4	187	980	151	6.11	87.3	27.4
S310×74	74.4	9470	305	139	16.7	17.4	127	833	116	6.60	94.9	26.4
×60.7	60.6	7730	305	133	16.7	11.7	113	744	121	5.67	85.3	27.1
×52	52.2	6650	305	129	13.8	10.9	95.8	629	120	4.16	64.5	25.0
×47	47.4	6040	305	127	13.8	8.9	91.1	597	123	3.94	62.1	25.5
S250×52	32.3	6660	254	126	12.5	15.1	61.6	485	96.2	3.56	56.5	23.1
×38	37.8	4820	254	118	12.5	7.9	51.4	405	103	2.84	48.2	24.3
S200×34	34.3	4370	203	106	10.8	11.2	27.0	266	78.6	1.81	34.2	20.4
×27	27.5	3500	203	102	10.8	6.9	24.0	237	82.8	1.59	31.1	21.3
S180×30	29.9	3800	178	98	10.0	11.4	17.8	200	68.4	1.34	27.3	18.8
×22.8	22.9	2910	178	93	10.0	6.4	15.4	173	72.7	1.12	24.0	19.6
S150×26	25.7	3270	152	91	9.1	11.8	10.9	144	57.7	0.981	21.6	17.3
×19	18.6	2370	152	85	9.1	5.9	9.19	121	62.3	0.776	18.2	18.1
S130×22	21.9	2790	127	83	8.3	12.5	6.33	99.6	47.6	0.690	16.6	15.7
×15	14.8	1890	127	76	8.3	5.4	5.12	80.6	52.0	0.508	13.4	16.4
S100×14.1	14.2	1800	102	71	7.4	8.3	2.85	55.8	39.8	0.376	10.6	14.5
×11	11.4	1450	102	68	7.4	4.8	2.55	50.1	41.9	0.324	9.52	14.9
S75×11	11.2	1430	76	64	6.6	8.9	1.22	32.0	29.2	0.249	7.77	13.2
×8	8.4	1070	76	59	6.6	4.3	1.04	27.4	31.2	0.190	6.43	13.3

Designation	Theoretical Mass, m (kg/m)	Area, A (mm^2)	Depth, h (mm)	Flange		Web Thickness t (mm)	Axis x-x			Axis y-y			x (mm)
				Width, b (mm)	Thickness, t (mm)		I_x ($10^6 mm^4$)	Z_x ($10^3 mm^3$)	$k_x = \sqrt{\frac{I_x}{A}}$ (mm)	I_y ($10^6 mm^4$)	Z_y ($10^3 mm^3$)	$k_y = \sqrt{\frac{I_y}{A}}$ (mm)	
C380× 74	74.4	9480	381	94	16.5	18.2	168	881	133	4.60	62.4	22.0	20.3
× 60	59.4	7570	381	89	16.5	13.2	145	760	138	3.84	55.5	22.5	19.7
× 50	50.5	6430	381	86	16.5	10.2	131	687	143	3.39	51.4	23.0	20.0
C310× 45	44.7	5690	305	80	12.7	13.0	67.3	442	109	2.12	33.6	19.3	17.0
× 37	37.1	4720	305	77	12.7	9.8	59.9	393	113	1.85	30.9	19.8	17.1
× 31	30.8	3920	305	74	12.7	7.2	53.5	351	117	1.59	28.2	20.1	17.5
C250× 45	44.5	5670	254	76	11.1	17.1	42.8	337	86.9	1.60	26.8	16.8	16.3
× 37	37.3	4750	254	73	11.1	13.4	37.9	299	89.3	1.40	24.3	17.2	15.7
× 30	29.6	3780	254	69	11.1	9.6	32.7	257	93.0	1.16	21.5	17.5	15.3
× 23	22.6	2880	254	65	11.1	6.1	27.8	219	98.2	0.922	18.8	18.9	15.9
C230× 30	29.8	3800	229	67	10.5	11.4	25.5	222	81.9	1.01	19.3	16.3	14.8
× 22	22.3	2840	229	63	10.5	7.2	21.3	186	86.6	0.806	16.8	16.8	14.9
× 20	19.8	2530	229	61	10.5	5.9	19.8	173	88.5	0.716	15.6	16.8	15.1
C200× 28	27.9	3560	203	64	9.9	12.4	18.2	180	71.5	0.825	16.6	15.2	14.4
× 21	20.4	2600	203	59	9.9	7.7	14.9	147	75.7	0.627	13.9	15.5	14.0
× 17	17.0	2170	203	57	9.9	5.6	13.5	133	78.9	0.544	12.8	15.8	14.5
C180× 22	21.9	2780	178	58	9.3	10.6	11.3	127	63.8	0.568	12.8	14.3	13.5
× 18	18.2	2310	178	55	9.3	8.0	10.0	113	65.8	0.476	11.4	14.4	13.2
× 15	14.5	1850	178	53	9.3	5.3	8.36	99.6	69.2	0.405	10.3	14.8	13.8
C150× 19	19.2	2450	152	54	8.7	11.1	7.12	93.7	53.9	0.425	10.31	13.2	12.9
× 16	15.5	1980	152	51	8.7	8.0	6.22	81.9	56.0	0.351	9.13	13.3	12.6
× 12	12.1	1540	152	48	8.7	5.1	5.36	70.6	59.0	0.279	7.93	13.5	12.8
C130× 17	17.2	2190	127	52	8.1	12.0	4.36	68.7	44.6	0.346	8.85	12.6	12.9
× 13	13.3	1700	127	47	8.1	8.3	3.66	57.6	46.4	0.252	7.20	12.2	11.9
× 10	9.9	1260	127	44	8.1	4.8	3.09	48.6	49.5	0.195	6.14	12.4	12.2
C100× 11	10.8	1370	102	43	7.5	8.2	1.91	37.4	37.3	0.174	5.52	11.3	11.5
× 9	9.4	1190	102	42	7.5	6.3	1.77	34.6	38.6	0.158	5.18	11.5	11.6
× 8	8.0	1020	102	40	7.5	4.7	1.61	31.6	39.7	0.132	4.65	11.4	11.6
C75 × 9	8.8	1129	76	40	6.9	9.0	0.85	22.3	27.5	0.123	4.31	10.5	11.4
× 7	7.3	933	76	37	6.9	6.6	0.75	19.7	28.3	0.096	3.67	10.1	10.8
× 6	6.0	763	76	35	6.9	4.3	0.67	17.6	29.6	0.077	3.31	10.1	10.9

Appendix: A10

Properties of Equal Angle Sections

Designation	Theoretical Mass, m (kg/m)	Area, A (mm^2)	Axis x-x and y-y				Axis Z-Z
			I_x ($10^6\ mm^4$)	Z_x ($10^3\ mm^3$)	$k_x = \sqrt{\frac{I_x}{A}}$ (mm)	x or y (min)	$k = \sqrt{\frac{I}{A}}$ (mm)
200×200×30	87.1	11100	40.3	290	60.3	60.9	39.0
×25	73.6	9380	34.8	247	60.9	59.2	39.1
×20	59.7	7600	28.8	202	61.6	57.4	39.3
×16	48.2	6140	23.7	165	62.1	55.9	39.5
×13	39.5	5030	19.7	136	62.6	54.8	39.7
×10	30.6	3900	15.5	106	63.0	53.7	39.9
150×150×20	44.0	5600	11.6	110	45.5	44.8	29.3
×16	35.7	4540	9.63	90.3	46.0	43.4	29.4
×13	29.3	3730	8.05	74.7	46.4	42.3	29.6
×10	22.8	2900	6.37	58.6	46.9	41.2	29.8
125×125×16	29.4	3740	5.41	61.5	38.0	37.1	24.4
×13	24.2	3080	4.54	51.1	38.4	36.0	24.5
×10	18.8	2400	3.62	40.2	38.8	34.9	24.7
×8	15.2	1940	2.96	32.6	39.1	34.2	24.8
100×100×16	23.1	2940	2.65	38.3	30.0	30.8	19.5
×13	19.1	2430	2.24	31.9	30.4	29.8	19.5
×10	14.9	1900	1.80	25.2	30.8	28.7	19.7
×8	12.1	1540	1.48	20.6	31.1	28.0	19.8
×6	9.14	1160	1.14	15.7	31.3	27.2	19.9
90×90×13	17.0	2170	1.60	25.6	27.2	27.2	17.6
×10	13.3	1700	1.29	20.2	27.6	26.2	17.6
×8	10.8	1380	1.07	16.5	27.8	25.5	17.7
×6	8.20	1040	0.826	12.7	28.1	24.7	17.9
75×75×13	14.0	1780	0.892	17.3	22.4	23.5	14.6
×10	11.0	1400	0.725	13.8	22.8	22.4	14.6
×8	8.92	1140	0.602	11.3	23.0	21.7	14.7
×6	6.78	864	0.469	8.68	23.3	21.0	14.8
×5	5.69	725	0.398	7.32	23.4	20.6	14.9

Properties of Equal Angle Sections

Designation	Theoretical Mass, m (kg/m)	Area, A (mm^2)	Axis x-x and y-y				Axis Z-Z
			I_x ($10^6\ mm^4$)	Z_x ($10^3\ mm^3$)	$k_x = \sqrt{\frac{I_x}{A}}$ (mm)	x or y (mm)	$k = \sqrt{\frac{I}{A}}$ (mm)
65×65×10	9.42	1200	0.459	10.2	19.6	19.9	12.7
×8	7.66	976	0.383	8.36	19.8	19.2	12.7
×6	5.84	744	0.300	6.44	20.1	18.5	12.8
×5	4.91	625	0.255	5.45	20.2	18.1	12.9
55×55×10	7.85	1000	0.268	7.11	16.4	17.4	10.7
×8	6.41	816	0.225	5.87	16.6	16.7	10.7
×6	4.90	624	0.177	4.54	16.9	16.0	10.8
×5	4.12	525	0.152	3.85	17.0	15.6	10.8
×4	3.33	424	0.125	3.13	17.1	15.2	10.9
×3	2.52	321	0.096	2.39	17.3	14.9	11.0
45×45×8	5.15	656	0.118	3.82	13.4	14.2	8.76
×6	3.96	504	0.094	2.98	13.7	13.4	8.79
×5	3.34	425	0.081	2.53	13.8	13.1	8.82
×4	2.70	344	0.067	2.07	13.9	12.7	8.87
×3	2.05	261	0.052	1.58	14.1	12.4	8.93
35×35×6	3.01	384	0.042	1.74	10.5	10.9	6.81
×5	2.55	325	0.036	1.49	10.6	10.6	6.83
×4	2.07	264	0.030	1.22	10.7	10.2	6.86
×3	1.58	201	0.024	0.940	10.8	9.86	6.91
25×25×5	1.77	225	0.012	0.724	7.39	8.06	4.87
×4	1.44	184	0.010	0.599	7.50	7.71	4.87
×3	1.11	141	0.008	0.465	7.63	7.35	4.89

Properties of Unequal Angle Sections

Size and Thickness (mm)	Theoretical Mass, m (kg/m)	Area, A (mm^2)	Axis x-x				Axis y-y				Axis z-z	
			I_x ($10^6 mm^4$)	Z_x ($10^3 mm^3$)	$k_x = \sqrt{\frac{I_x}{A}}$ (mm)	y (mm)	I_y ($10^6 mm^4$)	Z_y ($10^3 mm^3$)	$k_y = \sqrt{\frac{I_y}{A}}$ (mm)	x (mm)	$k = \sqrt{\frac{I}{A}}$ (mm)	$\tan\alpha$
200×150×25	63.8	8120	31.6	236	62.3	66.3	15.1	139	43.2	41.3	32.0	0.543
×20	51.8	6600	26.2	193	63.0	64.5	12.7	115	43.8	39.5	32.1	0.549
×16	42.0	5340	21.6	158	63.5	63.1	10.5	93.8	44.3	38.1	32.3	0.554
×13	34.4	4380	17.9	130	64.0	62.0	8.77	77.6	44.7	37.0	32.5	0.557
200×100×20	44.0	5600	22.6	180	63.6	74.3	3.84	50.8	26.2	24.3	21.3	0.256
×16	35.7	4540	18.7	147	64.2	72.8	3.22	41.8	26.6	22.8	21.4	0.262
×13	29.3	3730	15.6	121	64.6	71.7	2.72	34.7	27.0	21.7	21.6	0.266
×10	22.8	2900	12.3	94.8	65.1	70.5	2.18	27.4	27.4	20.5	21.8	0.271
150×100×16	29.4	3740	8.40	84.8	47.4	50.9	3.00	40.4	28.3	25.9	21.6	0.434
×13	24.2	3080	7.03	70.2	47.8	49.9	2.53	33.7	28.7	24.9	21.7	0.440
×10	18.8	2400	5.58	55.1	48.2	48.8	2.03	26.6	29.1	23.8	21.9	0.445
×8	15.2	1940	4.55	44.6	48.5	48.0	1.67	21.6	29.3	23.0	22.0	0.448
125×90×16	25.0	3180	4.84	58.5	39.0	42.2	2.09	32.0	25.6	24.7	19.2	0.499
×13	20.6	2630	4.07	48.6	39.4	41.2	1.77	26.7	26.0	23.7	19.3	0.505
×10	16.1	2050	3.25	38.2	39.8	40.1	1.42	21.1	26.4	22.6	19.5	0.511
×8	13.0	1660	2.66	31.1	40.1	39.3	1.18	17.2	26.6	21.8	19.6	0.515
125×75×13	19.1	2430	3.82	47.1	39.6	43.9	1.04	18.5	20.7	18.9	16.2	0.356
×10	14.9	1900	3.05	37.1	40.0	42.8	0.841	14.7	21.0	17.8	16.3	0.363
×8	12.1	1540	2.50	30.1	40.3	42.1	0.697	12.0	21.3	17.1	16.4	0.367
×6	9.14	1160	1.92	23.0	40.6	41.3	0.542	9.23	21.6	16.3	16.6	0.372
100×90×13	18.1	2300	2.17	31.4	30.7	31.1	1.66	25.9	26.8	26.1	18.4	0.976
×10	14.1	1800	1.74	24.9	31.1	30.0	1.33	20.5	27.2	25.0	18.5	0.800
×8	11.4	1460	1.43	20.3	31.4	29.3	1.10	16.8	27.5	24.3	18.6	0.802
×6	8.67	1100	1.11	15.5	31.7	28.5	0.853	12.8	27.8	23.5	18.7	0.805
100×75×13	16.5	2110	2.04	30.6	31.1	33.4	0.976	18.0	21.5	20.9	16.0	0.541
×10	13.0	1650	1.64	24.2	31.5	32.3	0.791	14.3	21.9	19.8	16.1	0.549
×8	10.5	1340	1.35	19.7	31.8	31.5	0.656	11.7	22.2	19.0	16.2	0.554
×6	7.96	1010	1.04	15.1	32.1	30.8	0.511	9.01	22.4	18.3	16.3	0.559

Properties of Unequal Angle Sections

Size and Thickness (mm)	Theoretical Mass, m (kg / m)	Area, A (mm^2)	Axis x-x				Axis y-y				Axis z-z	
			I_x ($10^6\ mm^4$)	Z_x ($10^3\ mm^3$)	$k_x = \sqrt{\frac{I_x}{A}}$ (mm)	y (mm)	I_y ($10^6\ mm^4$)	Z_y ($10^3\ mm^3$)	$k_y = \sqrt{\frac{I_y}{A}}$ (mm)	x (mm)	$k = \sqrt{\frac{I}{A}}$ (mm)	$\tan\alpha$
90× 75× 13	15.5	1980	1.51	24.8	27.6	29.3	0.946	17.8	21.9	21.8	15.6	0.672
× 10	12.2	1550	1.22	19.7	28.0	28.2	0.767	14.1	22.2	20.7	15.7	0.679
× 8	9.86	1260	1.01	16.1	28.3	27.5	0.636	11.6	22.5	20.0	15.8	0.683
× 6	7.49	954	0.779	12.3	28.6	26.8	0.495	8.89	22.8	19.3	15.9	0.687
× 5	6.28	800	0.660	10.4	28.7	26.4	0.421	7.50	22.9	18.9	16.0	0.689
90× 65× 10	11.4	1450	1.16	19.2	28.3	29.8	0.507	10.6	18.7	17.3	13.9	0.506
× 8	9.23	1180	0.958	15.7	28.5	29.1	0.422	8.72	18.9	16.6	14.0	0.512
× 6	7.02	894	0.743	12.1	28.8	28.4	0.330	6.72	19.2	15.9	14.2	0.518
× 5	5.89	750	0.629	10.2	29.0	28.0	0.281	5.68	19.4	15.5	14.2	0.520
80× 60× 10	10.2	1300	0.808	15.1	24.9	26.5	0.388	8.92	17.3	16.5	12.8	0.543
× 8	8.9	1060	0.670	12.4	25.2	25.8	0.324	7.33	17.5	15.8	12.9	0.549
× 6	6.31	804	0.522	9.50	25.5	25.1	0.254	5.66	17.8	15.1	13.0	0.555
× 5	5.30	675	0.443	8.02	25.6	24.7	0.217	4.79	17.9	14.7	13.0	0.558
70× 50× 8	7.35	936	0.525	10.6	23.7	25.5	0.187	5.06	14.1	13.0	10.8	0.434
× 6	5.60	714	0.410	8.15	24.0	24.7	0.148	3.92	14.4	12.2	10.9	0.441
× 5	4.71	600	0.349	6.88	24.1	24.4	0.127	3.32	14.5	11.9	10.9	0.445
65× 50× 8	6.72	856	0.351	8.03	20.2	21.3	0.180	4.97	14.5	13.8	10.6	0.572
× 6	5.13	654	0.275	6.19	20.5	20.6	0.142	3.85	14.7	13.1	10.7	0.580
× 5	4.32	550	0.235	5.24	20.7	20.2	0.122	3.27	14.9	12.7	10.8	0.583
× 4	3.49	444	0.192	4.25	20.8	19.9	0.100	2.66	15.0	12.4	10.8	0.587
55× 35× 6	3.96	504	0.152	4.23	17.4	19.0	0.048	1.85	9.77	9.04	7.55	0.396
× 5	3.34	425	0.130	3.59	17.5	18.7	0.041	1.58	9.89	8.68	7.59	0.401
× 4	2.70	344	0.107	2.92	17.7	18.3	0.034	1.29	10.0	8.31	7.65	0.406
× 3	2.05	261	0.083	2.23	17.8	17.9	0.027	0.994	10.2	7.94	7.72	0.411
45× 30× 6	3.25	414	0.082	2.79	14.0	15.7	0.029	1.32	8.35	8.22	6.44	0.426
× 5	2.75	350	0.070	2.37	14.2	15.4	0.025	1.13	8.46	7.86	6.47	0.433
× 4	2.23	284	0.058	1.94	14.3	15.0	0.021	0.930	8.58	7.49	6.51	0.439
× 3	1.70	216	0.045	1.49	14.5	14.6	0.016	0.717	8.72	7.12	6.57	0.445

A

Actual column load, 595
Actual rupture strength, 6
Actual ultimate shearing stress, 135
AISC column specifications, 596
Allowable load, 10
Allowable stress, 10
Angle of twist, 133
  formula, 134
  of non-circular member, 141
  of spring, 148
Area moment method, 430
  theorem of, 430
Assumptions:
  for beam deflection equation, 427
  for flexure formula, 335
  for torsion formula, 131
Axial strain, 10
Axis of symmetry, 336

B

Balanced reinforcement, 539
Beam, 222
  cantilever, 223
  composite, 534
  concrete, 534
  continuous, 224
  elastic curve of, 426
  fixed, 224
  neutral axis of, 224
  neutral surface of, 224
  overhanging, 223
  reinforced, 534
  simple, 223
  simply supported, 223
  statically determinate, 223
  statically indeterminate, 223
  timber, 534
  types of, 223
Bearing stress, 19
Belleville spring, 144
Bending:
  modulus of rupture in, 342
Bending (Cont'd.):
  pure, 335
Bending moment, 225
  sign convention of, 225
Bending stress, 336
  formula, 338
Bi-axial stress, 664
Bi-axial stress element, 663
Bond stress, 539
Breaking strength, 6
Brittle materials, 4, 6, 9
Brittleness, 9
Buckling:
  of column, 588
  load for column, 588
  modes of column, 591

C

Cantilever beam, 223
Castigliano's theorem, 748
Centroid:
  of composite areas, 918
  of group of rivets, 136
Circumferential stress, 16
Classical sign convention, 664
Column, 588
  actual load for, 595
  AISC specifications for, 596
  buckling of, 588
  buckling load for, 588
  buckling modes of, 591
  critical load for, 588
  critical slenderness ratio for, 596
  effective length of, 592
  end condition of, 589
  Euler's formula for, 592
  fixed end of, 589
  flag pole type of, 592
  free end of, 589
  hinged end of, 589
  ideal, 588
  intermediate, 588, 595
  Johnson's formula for, 595

Column (Cont'd.):
limitations for Euler's, 594
limiting slenderness ratio for, 596
long, 588
maximum stress approach for, 602
National Lumber formulas for, 597
Secant formula for, 601
working load of, 595
Combined stress, 848
formula for, 849
Comparison of different failure theories, 754
Composite beam, 534
Compression, 2
Compression spring, 144
Compressive stress, 2
Concentrated load, 222
Concrete beam, 534
Continuous beam, 224
Correction factor:
curvature, 147
shear stress, 146
Coupling:
flange, 136
Critical load for column, 588
Critical slenderness ratio, 596
Curvature correction factor, 147
Curvature effect in spring, 147
Curvature shear stress, 146
Cylindrical pressure vessel, 16

D

Dangerous section, 225
Deformable bodies, 1
Deformation, 9
unit, 3
unit shearing, 3
Density:
strain energy, 746
Design stress, 10
Determinate structure, 21
Diagram:
S-N, 15
stress-strain, 5
Direct shear stress, 19
Discontinuities, 142
Distributed load, 222
Double integration method, 428
Ductile materials, 4, 6
Ductility, 9

E

Effective length of column, 592
Elastic curve:
of beam, 426
deflection equation of, 428
differential equation of, 428
relation of, 427
slope equation of, 428
Elastic limit, 5
Elastic resilience:
modulus of, 10
Elastic zone, 5
Elasticity, 1
modulus of, 8
End conditions of column, 589
Endurance limit, 14
Energy:
potential, 745
strain, 745
Engineering strain, 8
Engineering stress, 8
Equivalent steel area, 536
Equivalent timber area, 536
Euler column formula, 592
Extension spring, 144
External torque, 131

F

Factor:
curvature correction, 147
stress concentration, 142
theoretical stress concentration, 142
Wahl, 147
Factor of safety, 10
Failure theory, 749
maximum distortion energy, 752
maximum normal stress, 749
maximum shear stress, 750
maximum strain energy, 752
Fatigue failure, 14
Fatigue limit, 14
Fatigue load, 14
Fatigue strength, 14

First moment of area, 340, 918
Fixed beam, 224
Fixed end of column, 589
Fixed support, 222
Flag pole type of column, 592
Flange coupling, 136
  torque capacity, 136
Flat spring, 144
Flexural rigidity, 428
Flexure formula, 338
  assumptions of curved beam, 850
  assumptions of straight beam, 335
  curved beam, 853
  straight beam, 338
Flexure stress, 336
Force:
  shear, 3
Formula:
  of AISC specification, 597
  of angle of twist, 134
  of angle of twist of helical
  of compression spring, 148
  of bearing stress, 19
  of bending stress, 338
  of bond stress in concrete beam, 540
  of centroid, 918
  of combined stress, 849
  of deflection of helical compression
  spring, 148
  of deformation, 9
  of elastic curve of beam, 427
  of Euler's column, 592
  of flexure, 338
  of flexure stress, 338
  of gradually applied load, 11
  of helical compression spring, 146
  of impact load, 12
  of Johnson's column, 596
  of longitudinal stress for thick-walled
  cylinder, 857
  of maximum shearing stress, 341, 668
  of moment of inertia, 918
  of National lumber manufacturer
  association, 597
  of principal stresses, 666
  of radial stress for thick walled cylinder,
  855
Formula (Cont'd):
  of resisting moment in concrete beam,
  538
  of riveted connection, 137
  of Secant, 601
  of shearing stress, 133, 137
  of shearing stress in concrete beam,
  540
  of shearing stress in helical
  compression spring, 146
  of shearing stress in riveted
  connection, 137
  of shearing stress in thin walled tube,
  140
  of slope of moment diagram, 227
  of slope of shear diagram, 227
  of spring deflection, 148
  of spring rate, 148
  of strain energy for axial loading, 746
  of strain energy for pure bending, 747
  of stress in infinite plate, 142
  of suddenly applied load, 13
  of tangential stress of thick walled
  cylinder, 856
  of tearing stress, 19
  of thermal stress, 23
  of thin walled cylindrical pressure
  vessel, 17
  of thin walled tube, 140
  of thin walled spherical pressure
  vessel, 18
  of torque capacity of flange, 136
  of torsion, 133
  of total strain, 673
  of total strain energy, 746
  of total strain energy for shear, 748
Free end of column, 589

G

Gage length, 4
Gradually applied load, 11

H

Helical compression spring, 144
Hinged end of column, 589
Hoof stress, 16
Hooke's law, 5

I

Ideal column, 588
Impact load, 12
Indeterminate structure, 21
Inflection point, 226
Intensity of stress, 2
Intermediate column, 588, 595
Impulsive load, 12

J

Johnson's column formula, 595
Joint:
  efficiency, 17
  riveted, 19

L

Lateral strain, 10
Leaf spring, 144
Limit,
  elastic, 5
  endurance, 14
  fatigue, 14
  proportional, 5
Limitations of Euler's column formula, 594
Limiting slenderness ratio, 596
Load:
  allowable, 10
  buckling, 588
  concentrated, 222
  critical, 588
  distributed, 222
  fatigue, 14
  gradually applied, 11
  impact, 12
  impulsive, 12
  suddenly applied, 13
  variable, 13
Long column, 588
Longitudinal stress, 17
Longitudinal shearing stress, 138

M

Malleability, 9
Malleable materials, 9
Materials:
  brittle, 4, 6, 9
Materials (Cont'd):
  ductile, 4, 6, 9
  malleable, 9
  mechanics of, 1
  strength of, 1
Maximum absolute shearing stress, 670
Maximum distortion energy theory, 752
Maximum normal stress theory, 749
Maximum shear stress theory, 750
Maximum strain energy theory, 752
Maximum stress approach for column, 602
Maximum shearing stress formula, 668
Mechanics of materials, 1
Method:
  offset, 7
Modulus:
  of elastic resilience, 10
  of elasticity, 8
  of resilience, 746
  of rigidity, 9
  of rupture in bending, 342
  of rupture in torsion, 135
  shear, 9
  Young's, 8
Mohr's circle, 669
Moment of inertia:
  first, 918
  of area, 919
  polar, 919
  principal, 924
  rectangular, 919
  second, 919
  transfer formula of, 920

N

National Lumber Manufacturers Association formulas, 597
Necking, 6
Neutral:
  axis, 224
  surface, 224
Nominal strain, 8
Nominal stress, 8

O

Offset method, 7
Over-reinforcement, 539
Overhanging beam, 223

P

Permissible stress, 10
Pinned support, 222
Plane st[illegible]
Plastic zo[illegible], 5
Plasticity, 2
Point:
  inflection, 226
  yield, 5
Poisson's ratio, 10
Polar moment of inertia, 919
Potential energy, 745
Pressure vessel, 16
  cylindrical, 16
  thick walled cylin[illegible] 853, 856
  thin wall[illegible]
  thin wal[illegible]cal, 18
Principal [illegible], 924
Principal moments of inertia, 924
Principal planes, 624
Principal stresses, 664
  formulas, 666
Product of inertia, 921
  transfer formula of, 922
Proportional limit, 5
Pure bending, 335

R

Radial stress, 16
Radius of gyration, 919
Rectangular moment of inertia, 919
Reinforced beam, [illegible]34
Reinforcement:
  balanced, 539
  over, 539
  under, 539
Relation:
  of load, shear and moment, 226
  of E, G a[illegible] ν, 675
Relative strength, 17
Resistin[illegible]
  momen[illegible]225
  shear, 2[illegible]
  torque, [illegible]
Rigid bodie[illegible] 1
Rigidity:
  flexural, 42
  modulus of
[illegible]iveted conn[illegible]
  torsion formu[illegible] of, 137
Riveted joint, 1[illegible]
Roller support, 22
Rotating beam tesing machine, 15
Rupture:
  modulus of, 124, 42
  strength, 6

S

Secant formula, 601
Second moment of area, 919
Shear, 225
  resisting, 225
  sign convention of, 225
Shear flow, 139
Shear force, 3, 225
Shear modulus, 9
Shear stress correction factor, 146
Shearing strain, 134
Shearing stress, 2, 340
  actual ultimate, 135
  curvature, 146
  formula, 133
  longitudinal, 138
  maximum absolute, 670
  of beam, 340
  of helical compression spring, 14
  of non-circular member, 141
  of rectangular beam, 341
  of thin walled tube, 140
Short compression member, 588
Sign convention:
  classical, 664
  of bending moment, 225
  of shear, 225
Simple beam, 223
Simple strain, 3

Simply supported beam, 223
Slenderness ratio:
critical, 596
limiting, 596
Slope:
equation of elastic curve of beam, 428
of moment diagram 227
of shear diagram, 227
S-N diagram, 15
Spherical pressure vessel, 18
Spring index, 145
Spring rate, 148
formula of, 148
Static equilibrium, 21
Statically:
determinate, 21
determinate beam, 223
indeterminate, 21
indeterminate beam, 223
Stiffness, 9
Strain, 3
axial, 10
energy, 745
energy density, 746
engineering, 8
lateral, 10
nominal, 8
shearing, 134
simple, 3
total, 673
true, 8
unit of, 3
Strength:
actual rupture, 6
breaking, 6
fatigue, 14
of materials, 1
relative, 17
rupture, 6
ultimate, 6
yield, 5
Stress, 2
allowable, 10
at a point, 663
bearing, 19
bending, 336
Stress (Cont'd):
bi-axial, 664
bond, 539
circumferential, 16
combined, 848
compressive, 2
concentration, 141
concentration factor, 142
concentration for concentrated load, 143
design, 10
direct shear, 19
engineering, 8
flexure, 336
hoof, 16
intensity of, 2
longitudinal, 17
nominal, 8
permissible , 10
plane, 664
principal, 664
radial, 16
shearing, 2, 122
tangential, 16
tearing, 19
tensile, 2
thermal, 22
true, 8
type of, 2
unit, 2
unit of, 2
working, 10
Stress element:
bi-axial, 663
three-dimensional, 663
Spring, 143
belleville, 144
compression, 144
extension, 144
flat, 144
helical compression, 144
index, 145
leaf, 144
torsion, 144
types of , 144
wire, 143
Stress-strain diagram, 5

Suddenly applied load, 13
Support:
fixed, 222
pinned, 222
roller, 222

T

Tangential stress, 16
Tearing stress, 19
Tensile stress, 2
Tension, 2
Tension spring, 144
Theorem of area moment method, 430
Theoretical stress concentration factor, 142
Thermal stress, 22
Thick walled cylinder:
longitudinal stress formula of, 857
radial stress formula of, 855
tangential stress formula of, 856
Thick walled cylindrical pressure vessel, 853
Thin walled cylindrical pressure vessel, 16
Thin walled pressure vessel, 16
Thin walled spherical pressure vessel, 18
Three-dimensional stress element, 663
Timber beam, 534
Torque:
external, 131
resisting, 131
Torsion:
assumptions of, 131
formula, 133
in riveted connection, 137
modulus of rupture in, 135
spring, 144
Torsional shearing stress, 132
Torsional shearing stress for thin walled tube, 139
Total strain, 673
Total strain formula, 673
Total strain energy formula, 746
Toughness, 10
Transfer formula:
of moment of inertia, 920
of product of inertia, 922
True stain, 8
True stress, 8
Types:
of beam loads, 223
of beams, 223
of beam supports, 222
of springs, 144
of stresses, 2

U

Ultimate strength, 6
Under-reinforcement, 539
Unit:
of deformation, 3
of modulus of elasticity, 9
of shearing deformation, 3
of strain, 3
of stress, 2
stress, 2

V

Variable loading, 13

W

Wahl factor, 147
Wire spring, 143
Working load of column, 595
Working stress, 10

Y

Yield
point, 5
point by offset method, 7
strength, 5
Young's modulus, 8

Z

Zone:
elastic, 5
plastic, 5